UNEX
ARCHITECTURAL BARRIERS

SEMI-FRAMELESS GLASS

Extrusions & Components

This section includes all the Rail, Post, Baseplates, End caps, Connections, Blanks, Wallplates, Brackets and Hardware, Gaskets/Wedges and Block profiles. The technical dimensions and purpose of each item is described here.

Style Specification

Each Framed Glass Balustrade Style and the applicable components when assembled have varying span widths allowed in accordance with code requirements. This combination can be determined in this section.

Fixing Specification

Coupled with the Style Specification of each style, Fixing Specifications determine the span allowed in various wind zones with alternate methods of installation of a balustrade system to a multitude of substrates.

Assembly Specifications

This section illustrates exploded cross-sectional views of each Framed Glass Balustrade style with the most common rail types. These diagrams show how each Extrusion & Component securely connect and insert to form a UNEX system.

Fabrication & Installation

Once the maximum allowable span and assembly of a system is determined, then this section guides installers on how to fabricate each style in this manual including Vertical Dimensions and site measurement.

CONTENTS

NOTES, DISCLAIMERS AND EXCLUSIONS OF LIABILITY

1. The purpose of this manual is to provide balustrade fabricators, assemblers, specifiers, builders and installers ("The User"), the information they require for using the product for its intended purpose and within its structural and legal limitations.
2. This manual is to remain in the possession of the receiver, as intended by UNEX Systems at the time of issue. It is not to be copied, nor passed on to others other than for the purpose stated above. This manual remains the property of UNEX Systems and must be returned to UNEX Systems when no longer required or on the written request of UNEX Systems.
3. UNEX Systems must be notified of any change in the name, address or contact details of the person or company to whom this manual was issued.
4. It is the User's responsibility to ensure that the manual includes any amendments that have been issued by UNEX Systems.
5. The information contained in this manual has been compiled for New Zealand only, and must not be relied on in any other country.
6. Specialist advice must be sought from qualified sources for any information or requirement not specifically covered in this Manual.
7. Any request for specific structural design requirements outside the scope of this manual must be made in writing to UNEX Systems and include all relevant information such as substrate details, proposed fixing methods, design wind speeds, etc.
8. This manual must only be used in conjunction and compliance with all other current applicable building standards or requirements.
9. Where any specifications, requirements or information set out in this manual conflict with, or are no longer compliant with, any applicable building standards or requirement, the user of the manual must notify UNEX Systems in writing so that the appropriate specifications, requirements, or information can be provided. Without limiting paragraphs 10 to 12, UNEX Systems will not be liable for any claims if this procedure is not followed.
10. All representations or warranties (statutory, express or implied), except any which may not be lawfully excluded, are expressly excluded including, without limitation, the implied warranties of merchantability and fitness for a particular purpose.
11. To the maximum extent permitted by law, the liability of UNEX Systems to any person for any loss whatsoever incurred arising directly or indirectly from the use of this Manual, or by any error or omission in this Manual, whether arising in contract, tort (including negligence), breach of statutory duty, or otherwise, is excluded.
12. If, despite paragraph 11, UNEX Systems is found liable, then to the maximum extent permitted by law, UNEX Systems will not be liable for any indirect or consequential loss suffered or incurred by the user.
13. The laws of New Zealand apply to these notes, disclaimers, and exclusion of liability.
14. Any reference to UNEX Systems and/or UNEX in this document or Manual is a reference to UNEX Systems (NZ) Limited, its successors or assigns.

SURFACE FINISHING

INTRODUCTION

One of the advantages of Aluminium as a material is that it provides an excellent substrate for surface finishing. Aluminium is therefore the preferred choice of material where coloured coatings are required. The main coating method used is "Powdercoating". Anodizing is also available but with a much more limited choice of colour. Care and maintenance instructions for all finishes are given on Page 6. Warranties are available on extrusions for certain surface finish options. These are limited to those supplied by the supplier and/or applicator, and must be requested at the time of the order.

1. POWDERCOATING

Powdercoatings are applied as a powder, electrostatically charged to provide a uniform film thickness, followed by baking and final oven curing, resulting in a tough, smooth, and even coating. This process is performed in factory controlled conditions, and consistently gives a more uniform and superior finish compared to wet coatings. Powdercoatings also have excellent adhesion to pretreated aluminium. The use of solvents for cleaning powdercoated surfaces should be strictly avoided.

2. ANODIZING

Anodizing is an induced thickening of the natural protective oxide film on the metal's surface, and not a coating in the usual sense. The resulting film is clear, hard, extremely corrosion resistant, and capable of being coloured. Colour options are however relatively limited, with Satin (natural aluminium colour), Medium Bronze and Dark Bronze being the main colours economically available for balustrades. Some accessories, such as cast end caps, can not be anodized, and must be powdercoated in a coordinating colour. The depth of the anodized film can be varied to suit the application.

The use of abrasives for cleaning should be avoided as they can damage the anodic layer beyond repair.

CARE & MAINTENANCE OF UNEX BALUSTRADES

It is the Fabricators responsibility to ensure that a copy of these Care and Maintenance Instructions is made available to every purchaser of UNEX Balustrades. It is important that every building owner observes these recommendations to obtain the durability required in the NZ Building Code.

1. MAINTENANCE OF ALUMINIUM BALUSTRADES

Cleaning is necessary if the fine finish of powdercoated and anodized aluminium is to be preserved. Deterioration of the coating occurs mainly as a result of grime deposition and attack by contaminated moisture which in a coastal environment contains salt and sulphur compounds. Deposited grime and contaminations absorbs moisture like a sponge and holds it against the powdercoated and adodized surfaces. This permits attack to proceed thereby damaging the coating which cannot be restored.

- Safety barriers shall be maintained in a structurally sound condition and, where applicable, self-closing gates and other components required for the protection of children shall be kept operable. Defects should be remedied immediately once they are apparent.
- Ensure drainage holes in posts and rails are kept clear, on 6 months frequency.
- While surface finishes do not last forever, observance of these instructions will maintain their appearance and significantly extend their useful life.
- Powdercoated surfaces will lose some gloss with time. Where desired, powdercoated gloss may be enhanced with 'Dulux Gloss Up', used in accordance with the manufacturer's instructions.

CARE AND PROTECTION

Always protect the balustrades from contact with:

- Wet cement or plaster, household cleaners including bleach, paint splashes, chemicals, solvents, stains and fertilisers are possibly harmful to the surface finish. If contact does occur, remove the contaminant immediately and wash as described below.
- Copper, brass, lead, mild steel, CCA treated timber, cement or concrete less than 1 month old, and water which has contacted any of these substances.

GUIDELINES FOR ALUMINIUM BALUSTRADE CLEANING

It is recommended most residential balustrades in mild conditions or interior installations be cleaned at least every once a year. In areas where pollutants are common such as industrial or geothermal areas, and for all sites within 1 km from the sea or in any sea spray zone identified by Section 4.2 of NZS 3604:1999, cleaning must be carried out more frequently as required, but not less than every three months.

PROCEDURE FOR ALUMINIUM BALUSTRADE CLEANING

a. Gently remove loose deposits with a wet sponge. Do not dry dust, or the surfaces will be scratched. Remove any moss growth, and ensure that all drain holes are unblocked, particularly those at the base of the posts and underside of lower rails.
b. Using a soft brush and a mild household detergent in warm fresh water, clean the surface to remove any dust, salt, or other deposits. Pay particular attention to any areas not washed naturally by the rain. In the instance of stubborn stains, use ONLY Isopropyl alcohol (IPA) or methylated spirits to help remove these.
c. Always rinse well after cleaning with fresh water so that the contact time of the cleaning solution is kept to a minimum. Hosing must be avoided under all circumstances. Rinse with a chamois, or a soft cloth.

(continued on following Page)

IMPORTANT NOTES

- Never use scrapers, emery paper, sandpaper, steel wool or other highly abrasive materials on any aluminium, nor acid or alkaline cleaners, or any chemical cleaners, as they can damage the anodised or powder coated finish.
- Be careful with emulsion cleaners as they too can attack anodised coatings – use only in consultation with companies who are specialists in anodised aluminium. Solvents, household cleaners, bleaches, and abrasive cleaners are possibly harmful to the surface finish and must not be used.
- All coated aluminium surfaces should avoid contact with acids, alkalis, mortar based products and solvents.
- Sunscreen can leave permanent marks on aluminium. Use gloves when handling, and, if affected, wash the sunscreen off immediately with warm, soapy water.

2. MAINTENANCE OF GLASS

Glass needs to be periodically washed to remove visible dirt and to prevent accumulations of dirt from bonding to or attacking the surface. Glass should be washed frequently as is needed to keep its appearance acceptable. In some locations, and for some building owners, this cleaning will be more frequent than for others.

GUIDELINES FOR GLASS CLEANING

- Glass should be cleaned using only cleaning materials which are free of grit and debris (to avoid scratching and marking of the glass surface).
- Only detergents and cleaning solutions which are recommended for cleaning glass should be used. Mild detergents are preferable.
- Extra care is necessary where high performance and coated glass products are installed as the coated surface can be susceptible to stains and scratches.
- Hand cleaning of the glass surface to visibly remove accumulated dust or fingerprints can be accomplished using a number of different glass cleaning products. Recommended cleaning product is Mr Muscle® Surface and Glass. For screen printed glass, use only neutral cleaning products on the printed surface. The use of ammonia-base and alcohol-base glass cleaners are not recommended because these products tend to leave visible streaks. The exterior surface of the glass is not coated so cleaning can be undertaken in the same fashion as ordinary glass.
- Glasses with a Low E or reflective coating need to be treated with special care when cleaning to ensure the coating is protected and not damaged once cleaned. Do not use razor blades, steel wool or other metallic objects on the coated surface.

PROCEDURE FOR GLASS CLEANING

a) While cleaning ensure jewelery and watches are removed and gloves should be worn to avoid scratching the surface of the glass. scratches that occur from foreign objects will be permanent and are not repairable.
b) Flood the glass surface with water and the spray-on cleaning solution or with a cloth saturated with the cleaning solution. Be generous with the amount of solution applied.
c) Scrub the wet surface with a clean, lint free towel or cloth.

(continued on following Page)

d) Wipe to dry with a clean, lint free towel or cloth. The use of a squeegee is not recommended and could increase the risk of damage to glass and as such should be avoided if possible.
e) To prevent streaking, stop wiping when the glass is almost dry and there is a uniform residue of moisture left on the glass surface. The residue will quickly evaporate leaving a clean surface.
f) Extra care is necessary where high performance and coated glass products are installed as the coated surface can be susceptible to stains and scratches.

IMPORTANT NOTES

- Do not use cleaners which contain Hydrofluoric or Phosphoric acid as they are corrosive to the glass surface.
- Avoid cleaning heat absorbing tinted glass in direct sunlight, as the glass will be excessively hot for optimum cleaning
- Do not allow cleaning solutions to contact the edges of laminated glass, Insulating Glass Units or Mirrors.
- Do not store or place other material in contact with the glass. (This can damage the glass or create a heat trap leading to thermal breakage).
- Abrasive cleaners, powder-based cleaners, scouring pads or other harsh materials should not be used to clean windows or other glass products.
- Avoid causing extreme temperature changes to the glass as this may lead to thermal fracture of the glass, i.e. do not splash hot water on cold glass or freezing water on hot glass.
- Some tapes or adhesives can stain or damage glass surfaces. Avoid using such materials unless they are known to be easily removed.
- It is suggested that professional cleaners consult with their suppliers as to the suitability of available cleaning equipment, materials and methods before attempting to clean toughened glass.

3. MAINTENANCE OF STAINLESS STEEL

Stainless steels are highly corrosion resistant-however, stainless steel applications can still remain at risk to surface damage. Oxidation, corrosion, rusting, or staining can occur over the long-term in harsh environments without routine cleaning and maintenance. Repeat mechanical damage also contributes to a faster degradation of the metal.

All stainless steels contain at least 10.5% chromium by weight. It is this chromium content that creates a shield called the passive layer, which protects stainless steel from corrosion-unlike other steels. The higher the chromium content, the greater the corrosion resistance. Stainless steel rusting occurs when the passive layer is damaged and there is not enough chromium for it to reform.

GUIDELINES FOR STAINLESS STEEL CLEANING

Stainless steel must be cleaned regularly to preserve the metal's integrity and maintain a pristine appearance. With proper care, and by selecting an appropriate grade, stainless steel can be saved from corrosion. When stainless steel maintenance is neglected, corrosive substances can accumulate on vulnerable surfaces.

(continued on following Page)

It is recommended most residential balustrades in mild conditions or interior installations be cleaned at least every 6 months. In areas where pollutants are common such as industrial or geothermal areas, and for all sites within 1 km from the sea or in any sea spray zone cleaning must be carried out more frequently as required, but not more than every three months.

PROCEDURE FOR STAINLESS STEEL CLEANING

a) Use a soft nylon brush to remove accumulated dirt.
b) Wash with warm water, mild soap or detergent.
c) Follow with a clean-water rinse.
d) Wipe dry with a soft cloth, disposable wipe, or air blower.

PROCEDURE FOR STUBBORN DIRT AND STAINS

e) Use a soft nylon brush to remove accumulated dirt.
f) Use non-scratching abrasion powders such as typical household cleaners.
g) For more aggressive cleaning a small amount of vinegar can be added to the powder.
h) These can be used with warm water, soft bristle brushes, sponges, or clean cloths.
i) Follow with a clean-water rinse.
j) Wipe dry with a soft cloth, disposable wipe, or air blower.

IMPORTANT NOTES

- Avoid any contact with carbon steels or iron.
- Use cleaners showing "Suitable for Stainless Steel"
- Do not weld, cut, drill, or grind carbon steel near stainless steel.
- Avoid contact with concrete detergents and chloride solutions.
- Do not use steel wool or other abrasive scrubbing pads.
- Never use chloride cleaners, abrasive cleaners, all-purpose cleaners, or chloride bleach cleaning products on stainless steel.

ABOUT THIS ADVICE

This information is offered as a general guide only and specific advice should always be sought from a reputable glazier or professional window cleaner before undertaking any cleaning. This guidance does not preclude the use of other methods, materials or equipment. However, the user should undertake careful evaluation and make suitable enquiries of the suitability of alternative methods, materials or equipment, before using them.

CURVED DECKS

UNEX Balustrades can be installed on curved decks using a **faceted** method. This involves forming the curve through a series of straight sections, with the balustrade rails set at slight angles to approximate the curve. Tighter curves generally require closer post spacing to achieve a smoother appearance.

Faceting is the only method supported by UNEX for curved deck installations, and it is compatible with all styles in the UNEX range. This approach offers a practical and cost-effective solution for curved layouts.

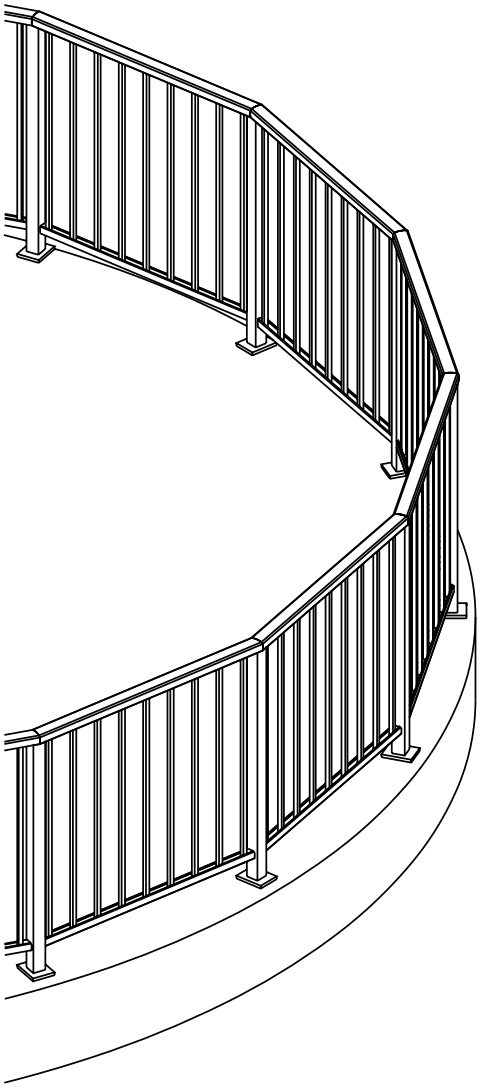

NZ BUILDING CODE COMPLIANCE

GENERAL

The New Zealand Building Code (NZBC) provides mandatory performance criteria for balustrades. The UNEX Balustrade System has been designed to make it easy for Specifiers to ensure that balustrade compliance is achieved. The main building code clauses which affect balustrades are as below. Some areas of the code may not necessarily affect every balustrade application.

B1: STRUCTURE - Structural strength and stability
B2: DURABILITY - Durability requirements
C2: MEANS OF Escape - Fire escape routes
D1: ACCESS ROUTES – Handrails
E2: WATER EGRESS – Water proofing
F2: HAZARDOUS BUILDING MATERIALS - Glazed balustrades
F4: SAFETY FROM FALLING - Barrier heights, opening sizes etc
F9: RESTRICTING ACCESS TO RESIDENTIAL POOLS

The performance criteria contained in the Building Code stipulates what is to be achieved, without prescribing how it is to be achieved. For more specific guidance, the MBIE issues 'Approved Documents' which provide detailed methods of establishing NZBC compliance, in the form of 'Verification Methods' or ' Acceptable Solutions'. While other criteria may be acceptable, the onus is on the designer to demonstrate adequate compliance with the prime requirements of the NZ Building Code. A brief summary of the Building Code clauses relevant to balustrades and handrails, is found on the following pages. A Producer Statement is available on www.unex.co.nz.

Disclaimer: Note that the information provided on the Building Code and other regulations is provided in good faith, and as applicable at the time of writing. However it is provided on a 'no liability' basis, and as these documents are up-dated from time to time, the latest documents should be consulted for full information and checked for subsequent amendments.

View The NZBC online at
www.building.govt.nz

(continued on following Page)

CLAUSE B1 - STRUCTURES

Balustrades are required to be capable of resisting certain loads. These include 'Live Loads' such as being induced by persons leaning on the balustrade. Live Loads vary with the application, eg.: Residential, Public etc. Balustrades with glass or other solid or semi-solid infill panels also need to withstand 'Wind Loads', which will vary with the location and other factors.

UNEX Balustrades have been designed to withstand the various human impact and wind loads as stipulated in the NZBC. This will be achieved if the balustrade heights and spacings between clamps or other fixing points, do not exceed the maximum given for the particular balustrade style's specification and method of fixing as given in Chapters 2 and 3. The maximum post spacings should be determined from these Chapters by the building designer and checked by the fabricator. The building designer must also ensure that an appropriate design of the substrate to adequately resist the loads imposed by the balustrade for the particular spans and fixing methods chosen is included in the drawings and specifications.

HUMAN IMPACT LOADS

These vary with the designated use of the building they are situated in, and are detailed in the loading standards cited in B1/VM1 of the NZBC: AS/NZS 1170.1:2002 Structural Design Actions. For reference, the various loadings have been designated with a "Loading Class" in the UNEX specifications. When using Chapters 2 and 3, the Loading Class must firstly be selected from the table on Page 87. Then the maximum post spacings can be determined for this class (along with the designated wind load if applicable), as indicated on the tables given in Chapters 2 and 3.

WIND LOADS

Balustrades with solid infill such as "glazed" styles must also withstand wind loads imposed, to the degree as stipulated in the New Zealand Building Code. These loads are defined by the Design Wind Speed for the particular project.

(continued on following Page)

CLAUSE B2 - DURABILITY

The New Zealand Building Code requires all balustrading to be sufficiently durable so as to remain functional for certain specified periods of time. These periods are given in the Acceptable Solution B2/AS1, which indicates a 'serviceable' durability requirement of 50 years for balustrade posts and top rails, and 15 years for infill members. Note that this durability requirement does not apply to non-serviceable aspects such as the surface finishes (eg. Powdercoating). For further information on these finishes refer to Page 5.

The durability aspect of the UNEX balustrade system has been assessed by a Materials and Corrosion consultant. A brief summary of this report is that in their opinion, UNEX Balustrades will meet these requirements if the balustrades are fabricated, installed and maintained in accordance with UNEX Systems' recommendations, including specific requirements relating to durability as outlined on Page 77-78 Note that this does not cover aesthetics, but only serviceability.

Certain Care and Maintenance procedures to be followed are given on Page 6.

(continued on following Page)

Specifications subject to change without notice

CLAUSE D1 - ACCESS ROUTES

Acceptable solution D1/AS1 stipulates requirements for handrails on all stairways, and on ramps steeper than 1:20 on "accessible" routes. The top rail on a balustrade may serve as a handrail on an access route providing it meets certain requirements including; the profile, a minimum distance perimeter of the top of the profile and the height of the top rail above the ramp or pitch line of the stairs is between 900-1000mm.

The VRE and CRR rails are the only rails that complies with the handrail profile requirements of D1/AS1 for "Private" and "Common" stairways, but not for "Accessible Stairways or Ramps", for which LRR & LRS rails are the only compliant rails.

Where a top rail of a balustrade on a stairway does not comply with D1/AS1, a compliant auxiliary LRR round side rail can be bracketed to the side of the balustrade.

D1/AS1 also limits the projection of a balustrade or handrail on an escape route including a stairway or ramp, so that it does not reduce the minimum width by more than 100mm. Particular attention should be given to the width of the stairs and ramps on escape routes to ensure there will be the minimum permitted width inside the balustrade(s) or handrail(s). This is particularly where balustrades are "top fixed". It is advisable to coordinate with the balustrade fabricator/installer early in the design process.

In some situations, balustrades may be required to be "imperforate and non-combustible". Whilst UNEX balustrades are not specifically designed to fulfill this requirement, they can usually be adapted to do so. UNEX Systems should be consulted if this is a requirement on any particular project.

UNEX Systems recommends that the NZBC is sighted in its entirety.

(continued on following Page)

CLAUSE E2 - WATER EGRESS

Where the balustrade attachment to the substrate incorporates water-proofing considerations, clause E2 of the NZ Building Code should be observed. Figure 19 of the Acceptable Solutions (E2/AS1 dated 1 July 2005) shows a detail which could apply to a balustrade. To sight the full details, please refer direct to the original documents in E2/AS1. There are some key points to be noted in figure 19 which must be incorporated in any application;

- The balustrade is side-mounted to a vertical surface (i.e. not top-mounted to a horizontal surface).
- The balustrade post is attached via a spacer which keeps the channel from directly bearing against the wall, and clears the drip edge above by a minimum of 25mm (Smaller clearances are usually accepted by Territorial Authorities).
- It shows a Neoprene or EPDM Washer between the spacer and the cladding.
- It shows the fixing which anchors into the framing, going through a batten in the cavity. It is important that any battens or packers used to transfer the compression loads within the cavity behind the cladding are vertical and extend over the full width and depth of the post, bracket or spacer.
- It shows a layer of sealant between the fixing and the sides of the hole in the cladding through which the fixing passes.

(continued on following Page)

CLAUSE F2 - HAZARDOUS BUILDING MATERIALS

This clause has particular application to balustrades with glass infill panels, which are required by Acceptable Solution F2/AS1 to comply with NZS 4223.

Effective from 1st June 2016, structural glass barriers need to have an interlinking rail, unless the barrier is laminated safety glass and has features to retain panes of glass or prevent collapse, in the event of breakage. An interlinking rail must be designed to resist serviceability limit state (SLS) loads, specified in AS/NZS 1170 and B1/VM1, in the event that a glass pane of the barrier breaks.

It is the responsibility of the fabricator to ensure that the balustrade glazing design complies with NZS 4223 in all respects; including glass thickness, glass span, panel size, containment, etc. However, the UNEX Balustrade System has been designed to make this easily achievable in most situations.

All glass used in UNEX Balustrades should be safety toughened.

CLAUSE F4 - SAFETY FROM FALLING

This clause stipulates when barriers such as balustrades are required, and provides generalized requirements for barriers such as: "Barriers shall be of appropriate height". Acceptable Solution F4/AS1 provides more specific information on barriers and pool fences, and covers such things as barrier heights, opening sizes, and restrictions on toeholds.

UNEX Balustrades are entirely versatile, and can be fabricated in virtually any height or configuration. It is therefore, the responsibility of the fabricator to ensure that the finished product complies in all respects to the requirements of Clause F4, with reference to the intended use of the area as obtained from the specifier or owner.

UNEX Systems recommends that the NZBC is sighted in its entirety.

(continued on following Page)

CLAUSE F9 - RESTRICTING ACCESS TO RESIDENTIAL POOLS

This clause has the requirements to prevent unsupervised access by children under five years of age to residential pools. It requires barriers around pools to restrict unsupervised access by children. Barriers can include gates and suitably constructed doors. Some small heated pools may have a removable cover rather than a surrounding barrier.

F9/AS1 provides the acceptable solution for swimming pool barriers in general. F9/AS2 provides the acceptable solution for covers which may be used on above ground small heated pools.

Specifications subject to change without notice

CHAPTER 1 - SEMI-FRAMELESS GLASS EXTRUSIONS & COMPONENTS

Posts pg18
Rails pg19-20
Infills & Inserts pg21
Miscellaneous Extrusions pg21
Baseplates (50mm x 50mm) pg22-23
Baseplates (50mm x 60mm) pg24
Blanks pg25
Caps pg26-29
Wallplates pg29-30
Brackets pg30-32
Connectors, Packers & Spacers pg33
Semi-frameless Gate Hardware pg34-36
Setting Blocks, Gaskets, & Wedges pg37-39
Fasteners pg40-44
Tools & Accessories pg45

POSTS

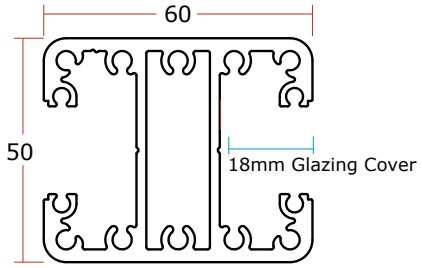

APE2

POST, RECESSED, EXTRA HEAVY DUTY

Extra heavy duty post with glazing recess on both sides. Refer to General Notes for glass support and lower rail attachment methods.
Glazing pocket width = 19.6mm
Glazing pocket depth = 20mm
Accepts AIA glass support insert and AIR2 infill to blank off recess if required.
10 gauge screwpipes.

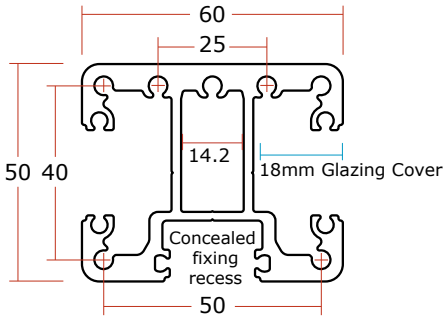

API2

POST, RECESSED, CONCEALED FIXING, EXTRA HEAVY DUTY

Extra heavy duty post with glazing recess on both sides when side fixing ONLY. Refer to General Notes for glass support and lower rail attachment methods.
Glazing pocket width = 19.6mm
Glazing pocket depth = 20mm
Accepts AIA glass support insert and AIR2 infill to blank off recess if required.
10 gauge screwpipes.

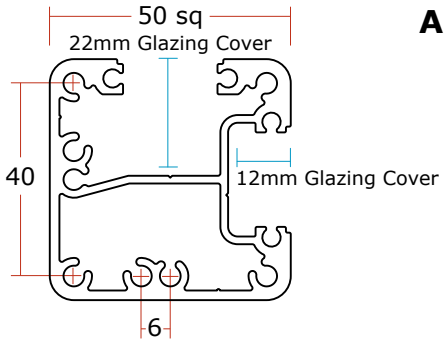

APQ2

POST, RECESSED CORNER

Post with glazing recesses on adjacent faces for corner applications. Refer to General Notes for glass support and lower rail attachment methods
Glazing Pocket Width = 19.6mm
Glazing Pocket Depth = 24.0mm
Glazing Pocket Depth (shallow recess) = 13.0mm
Accepts AIA glass support insert and AIR2 infill to blank off recess if required.
10 gauge screwpipes.

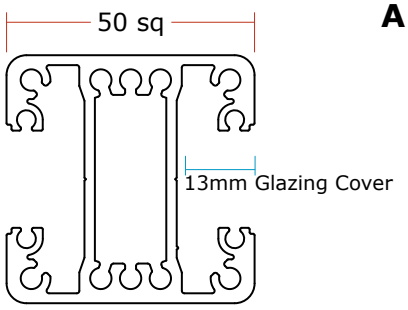

APS2

POST, RECESSED

Post with glazing recess on both sides. Refer to General Notes for glass support and lower rail attachment methods. Should be used in preference to APR2 post for side fixing, and for concrete core-drilled fixing.
Glazing Pocket Width = 14.2mm
Glazing Pocket Depth = 16.0mm
Accepts AIA glass support insert and AIR2 infill to blank off recess if required.
10 gauge screwpipes.

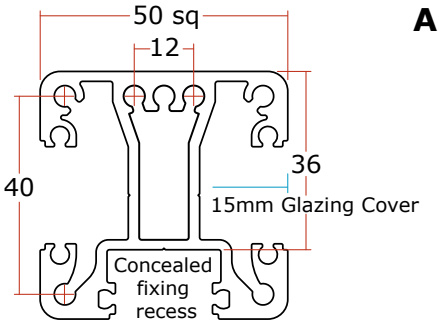

APT

POST, RECESSED, CONCEALED FIXING

Post with glazing recess on both sides fro side fixing ONLY. Refer to General Notes for glass support and lower rail attachment methods. Should be used in preference to APS2 post for side fixing, and for concrete core-drilled fixing.
Glazing Pocket Width = 19.6mm
Glazing Pocket Depth = 17.8mm
Accepts AIA glass support insert and requires AIR2 infill ONLY to blank off concealment recess.
10 gauge screwpipes.

RAILS

LRR

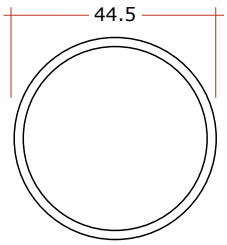

RAIL, ROUND, SIDE OUTER

Form a continuous side rail when using LRWN bracket mounted to posts on UNEX's Semi-Frameless Glass Styles.

Size complies with handrail requirements for an "Accessible Stairway or Ramp".

Note: Handrail jointers and bends available, contact UNEX

VRR

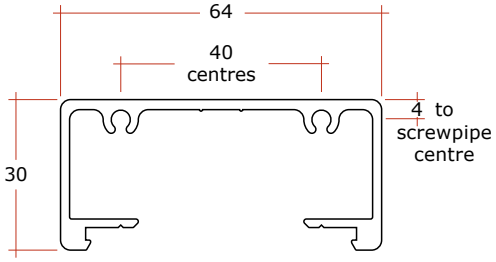

RAIL, RECTANGLE SIDE OUTER

Clip fits to DRH, DRI2 or PZT Rails to form a continuous Side Rail when using the LBWN bracket mounted to posts in UNEX's Semi-Frameless Glass styles.
8 gauge screwpipes for wallplates, etc.

PRR

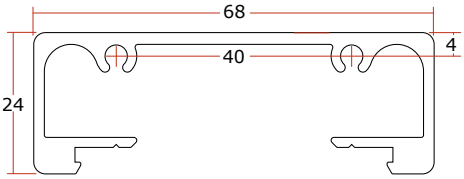

RAIL, RECTANGLE, SIDE OUTER

Clip fits to DRI2, DRH, or PZT Rails to form a continuous Side Rail when using the LBWN bracket mounted to posts in UNEX's Semi-Frameless Glass styles.
8 gauge screwpipes for wallplates, etc.

CRR

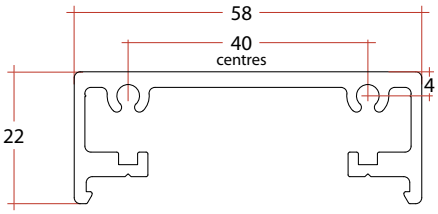

RAIL, RECTANGLE, SIDE OUTER

Clip fits to DRH, DRI2 or PZT Rails to form a continuous Side Rail when using the LBWN bracket mounted to posts in UNEX's Semi-Frameless Glass styles.
8 gauge screwpipes for wallplates, etc.

Size complies with handrail requirements for a "Private & Common Stairway".

VRE

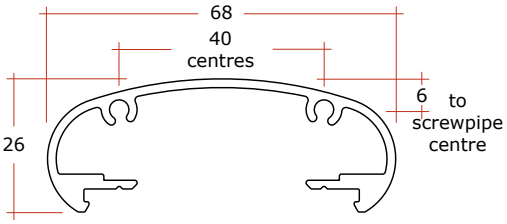

RAIL, ELLIPTICAL SIDE OUTER

Clip fits to DRH, DRI2 or PZT Rails to form a continuous Side Rail when using the LBWN bracket mounted to posts in UNEX's Semi-Frameless Glass styles.
8 gauge screwpipes for wallplates, etc.

Size complies with handrail requirements for a "Private & Common Stairway".

RAILS - (CONT'D)

ART

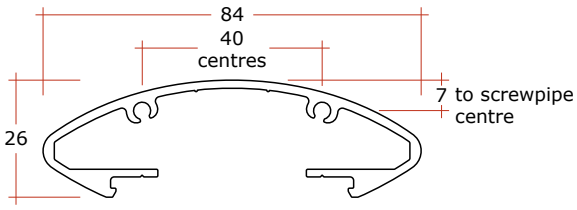

RAIL, SIDE OUTER

Clip fits to DRH, DRI2, or PZT Inner Rails to form a continuous Side Rail when using the LBWN bracket mounted to posts in UNEX's Semi-Frameless Glass styles. Accepts two 8 gauge screws for wallplates etc.

VRT

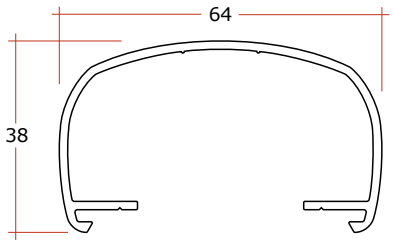

RAIL, SIDE OUTER

Clip fits to DRH, DRI2 or DZT3 Rails to form a continuous Side Rail when using the LBWN bracket mounted to posts in UNEX's Semi-Frameless Glass styles.
Accepts VNT spigot and VIT extrusion.

DRH

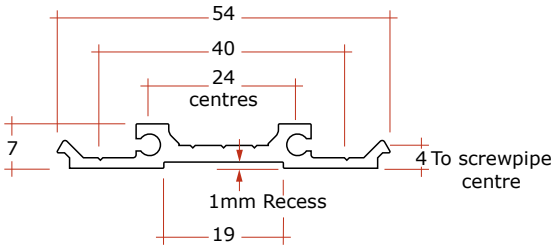

RAIL, SIDE INNER

Clip fits to all handrails except RRS to form a continuous Side Rail with a flat underside (except for 19 x 1.0 recess).

CRF

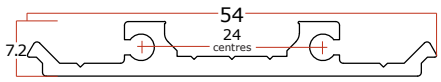

RAIL, SIDE INNER

Clip fits to CRR Rails to form a continuous Side Rail when using the LBWN bracket mounted to posts in UNEX's Semi-Frameless Glass styles.
8 gauge screwpipes.

INFILLS & INSERTS

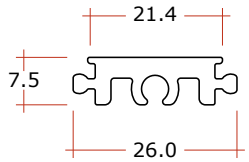

AIA

INSERT, GLASS SUPPORT TYPE

Slides into the glazing recess of the APE2, APQ2 and APS2 post. Can be used in conjunction with AKS2 or AKSV plates. Can also be used as a blank infill where required.
10 gauge screwpipe.

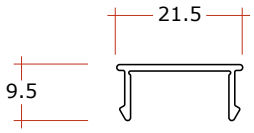

AIR2

INFILL, CLIP FIT

Clips into all glazing recesses, except for DZC extrusion.

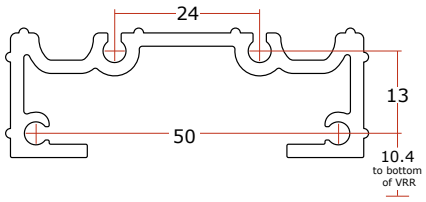

VIR

INSERT, SPIGOT FOR VRR RAIL

Inserts into VRR Outer Side Rail. May be used to manufacture jointers, or hidden wall connectors. Screws to VWT plate with 3 off 8 gauge screws. Large ports clear 14 gauge screws or M8 Dynabolts to the wall. See also component VNT.

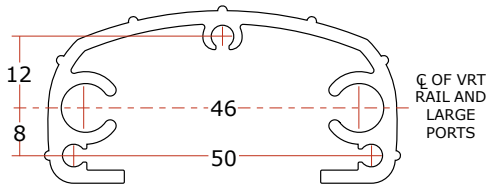

VIT

INSERT, SPIGOT FOR VRT RAIL

Inserts into VRT Outer Side Rail. May be used to manufacture jointers, or hidden wall connectors. Screws to VWT plate with 3 off 8 gauge screws. Large ports clear 14 gauge screws or M8 Dynabolts to the wall. See also component VNT.

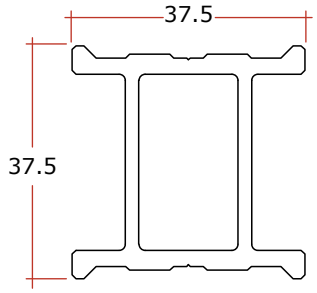

VIH

POST STIFFENER

Inserts into VPH2 and VPE Posts.

BASEPLATES (50MM X 50MM)

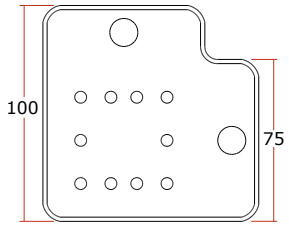

BSCR

BASEPLATE FOR 50X50 POSTS, CORNER

For 90° corners where 2 baseplates, BSHR or BSMR, are used elsewhere.
Ø13mm fixing holes.
12mm thick plate.

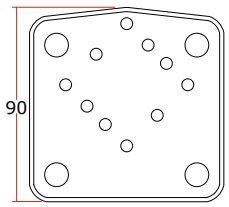

BSGF

BASEPLATE FOR ON 90° CORNER GUTTER BRACKETS

For attachment of APQ2, APS2, VPE, & VPH2 Posts to the DKG90-043 90° corner welded gutter bracket.
4 off Ø11mm fixing holes.
12mm thick plate.

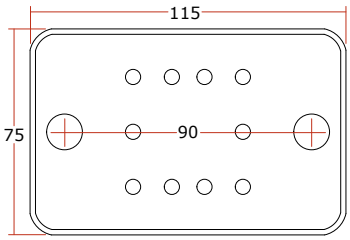

BSHR

BASEPLATE FOR 50X50 POSTS, INLINE FIXING

For attachment of APQ2, APS2, VPE, & VPH2 posts directly to Steel Substrates where only 2 fasteners are required to be in-line with the balustrade centreline.
Ø13mm fixing holes.
12mm thick plate.

**TSS75 Tape is required to separate between baseplate and steel substrates*

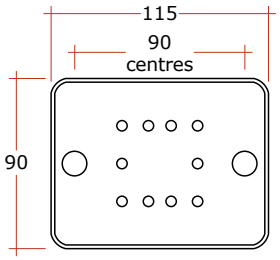

BSMR

BASEPLATE FOR 50X50 POSTS, INLINE FIXING

For attachment of APQ2, APS2, VPE, & VPH2 posts directly to Steel Substrates where only 2 fasteners are required to be in-line with the balustrade centreline.
Ø13mm fixing holes.
12mm thick plate.

**TSS90 Tape is required to separate between baseplate and steel substrates*

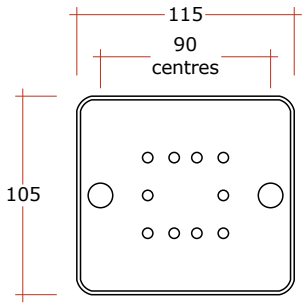

BSLR

BASEPLATE FOR 50X50 POSTS

For attachment of APQ2, APS2, VPE, & VPH2 posts directly to Steel Substrates, where only 2 fasteners are required to be in-line with balustrade centreline.
Ø13mm fixing holes.
12mm thick plate.

BASEPLATES (50MM X 50MM) - (CONT'D)

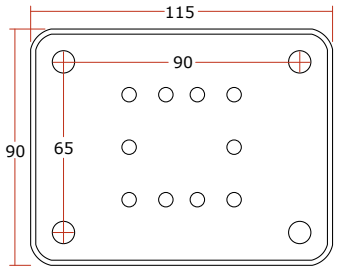

BSMF
BSMP

BASEPLATE FOR 50X50 POSTS

For attachment of APQ2, APS2, VPE, & VPH2 posts to DKG2-140 bracket, or narrow Timber and Concrete Substrates. 12mm thick plate.

BSMF = 4 off Ø11mm fixing holes.
BSMP = 4 off Ø13mm fixing holes.
BSMZ = No holes for substrate fixings.
BZMF = No holes for post, substrate only.

***BSMZ, BZMF is made to order*

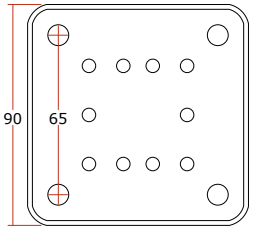

BSQF
BSQP

BASEPLATE FOR 50X50 POSTS

For attachment of APQ2, APS2, VPE, & VPH2 posts on corners where BSM_ bases are used on in-line posts. 12mm thick plate.

BSQF = 4 off Ø11mm fixing holes.
BSQP = 4 off Ø13mm fixing holes.
BSQZ = No holes for substrate fixings.

***BSQZ is made to order*

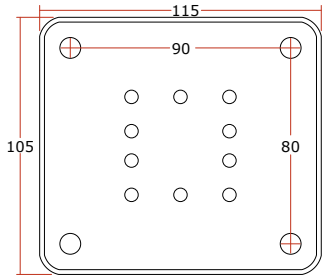

BSRF
BSRP

BASEPLATE FOR 50X50 POSTS

For maximum strength attachment of APQ2, APS2, VPE, & VPH2 posts to Timber and Concrete Substrates. 12mm thick plate.

BSRF = 4 off Ø11mm fixing holes.
BSRP = 4 off Ø13mm fixing holes.
BSRZ = No holes for substrate fixings.
BZRP = No holes for post, substrate only.

***BZRS, BZRP is made to order*

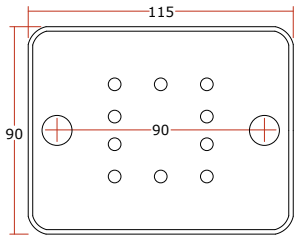

BSRR

BASEPLATE FOR 50X50 POSTS

For attachment of APQ2, APS2, VPE, & VPH2 posts to Concrete Substrates where only two fasteners are required. 12mm thick plate.
BSRR = 2 off Ø13mm fixing holes.

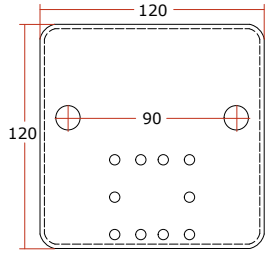

BSORG

OFFSET BASEPLATE FOR 50X50 POSTS

For attachment of APQ2, APS2, VPE, & VPH2 posts to Concrete Stair Substrates where only two fasteners are required. 16mm thick plate.
BSRR = 2 off Ø13mm fixing holes.
Offset for stairs.

BASEPLATES (50MM X 60MM)

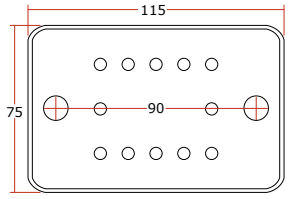

BEHR

BASEPLATE, FOR 50X60 POSTS, INLINE FIXING

For attachment of APE2 Posts directly to Steel Substrates where only 2 fasteners are required to be in-line with the balustrades centreline.
Ø13mm fixing holes.
12mm thick plate.

**TSS75 Tape is required to separate between baseplate and steel substrates*

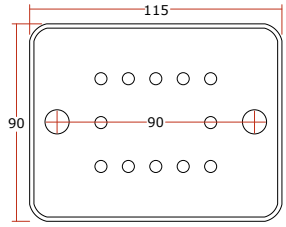

BEMR

BASEPLATE, FOR 50X60 POSTS, INLINE FIXING

For attachment of APE2 Posts directly to Steel Substrates where only 2 fasteners are required to be in-line with the balustrades centreline..
Ø13mm fixing holes.
12mm thick plate.

**TSS90 Tape is required to separate between baseplate and steel substrates*

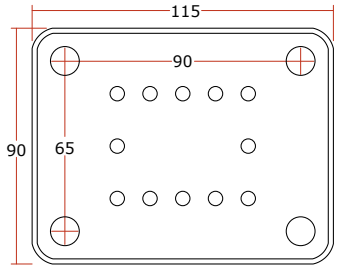

BEMF

BASEPLATE FOR 50X60 POSTS

For attachment of APE2 Posts to the DKG2-014 gutter bracket.
4 off Ø11mm fixing holes.
12mm thick plate.

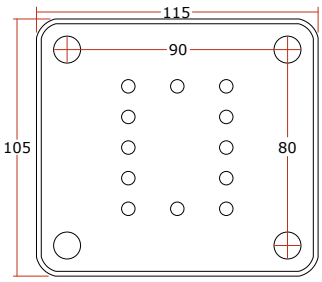

BERF
BERP

BASEPLATE FOR 50X60 POSTS

For maximum strength attachment of APE2 posts to Timber or Concrete substrates. 12mm thick plate.
BERF = 4 off Ø11mm fixing holes.
BERP = 4 off Ø13mm fixing holes.
BERZ = No holes for substrate fixings.

***BERZ is made to order*

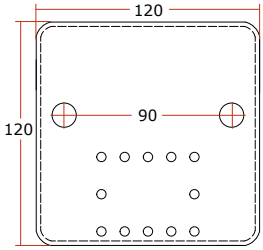

BEORG

OFFSET BASEPLATE FOR 50X60 POSTS

For maximum strength attachment of APE2 posts to Timber or Concrete substrates where only two fasteners are required. 16mm thick plate.
Offset for stairs.

BLANKS

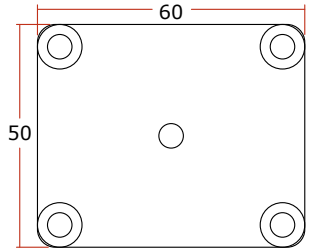

AAESS

BLANK, FOR APE2 POSTS, SET

To blank off lower ends of side-fixed APE2 posts. Must be used when using the AKS2 or AKSV glass support method, and must be attached with 4 off FV10-38.T1 screws included in set.
3mm thick plate

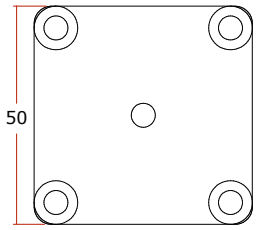

AAPS

BLANK, FOR APQ2 & APS2 POSTS, SET

To blank off lower ends of side-fixed APQ2 & APS2 posts. Must be used when using the AKS2 or AKSV glass support method, and must be attached with 4 off FV10-38.T1 screws included in set.
3mm thick plate.

CAPS

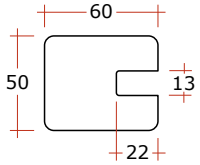

ACEES

CAP, RECESSED FOR END POSTS

Flat cap to fit on the APE2 post. The grub screws below the cap fit into the screw ports of the post. Secure to post with a small amount of silicone or adhesive. Glazing recesses have been cut to suit 12mm protruding glass on end posts.
4.5mm thick plate.

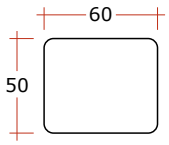

ACEFS

CAP, BLANK

To fit on the APE2 post (refer to ACPE for standard cap). The grub screws below the cap fit into the screw ports of the post. Secure to post with a small amount of glazing silicone or adhesive.
4.5mm thick plate.

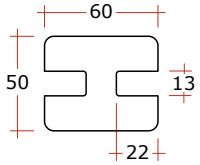

ACEIS

CAP, RECESSED FOR INLINE POSTS

Flat cap to fit on the APE2 post. The grub screws below the cap fit into the screw ports of the post. Secure to post with a small amount of silicone or adhesive. Glazing recesses have been cut to suit 12mm protruding glass on inline posts.
4.5mm thick plate.

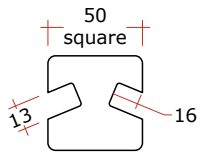

ACFBS

CAP, RECESSED FOR 45º CORNER POSTS

Flat cap to fit on the APS2 post. The grub screws below the cap fit into the screw ports of the post. Secure to post with a small amount of silicone or adhesive. Glazing recesses have been cut to suit 12mm protruding glass on 45º corners.
4.5mm thick plate.

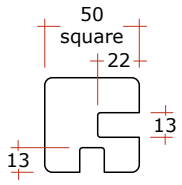

ACFCS

CAP, RECESSED FOR LEFT HAND CORNER POSTS

Flat cap to fit on the APQ2 post. The grub screws below the cap fit into the screw ports of the post. Secure to post with a small amount of silicone or adhesive. Glazing recesses have been cut to suit 12mm protruding glass on left hand 90º corner posts.
4.5mm thick plate.

CAPS - (CONT'D)

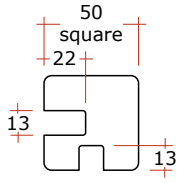

ACFDS

CAP, RECESSED FOR RIGHT HAND CORNER POSTS

Flat cap to fit on the APQ2 post. The grub screws below the cap fit into the screw ports of the post. Secure to post with a small amount of silicone or adhesive. Glazing recesses have been cut to suit 12mm protruding glass on right hand 90º corner posts.
4.5mm thick plate.

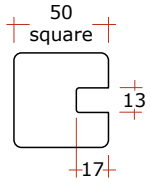

ACFES

CAP, RECESSED FOR END POSTS

Flat cap to fit on the APS2 post. The grub screws below the cap fit into the screw ports of the post. Secure to post with a small amount of silicone or adhesive. Glazing recesses have been cut to suit 12mm protruding glass on end posts.
4.5mm thick plate.

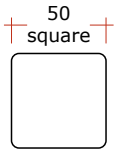

ACFFS

CAP, BLANK

Flat cap to fit on the APQ2 and APS2 posts (refer to ACPR for standard cap). The grub screws below the cap fit into the screw ports of the post. Secure to post with a small amount of silicone or adhesive.
4.5mm thick plate.

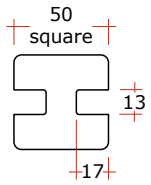

ACFIS

CAP, RECESSED FOR INLINE POSTS

To fit on the APS2 post. The grub screws below the cap fit into the screw ports of the post. Secure to post with small amount of silicone or adhesive. Glazing recesses have been cut to suit 12mm protruding glass inline posts.
4.5mm thick plate.

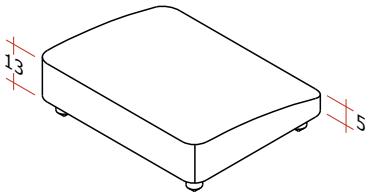

ACPE

CAP, FOR APE2 POST

To fit on the APS2 post. The prongs below the cap fit into the screw ports of the post. Secure to post with small amount of silicone or adhesive on the prongs.

CAPS - (CONT'D)

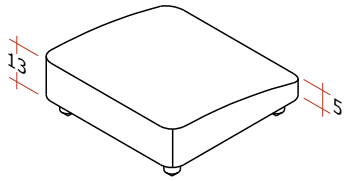

ACPR

CAP, FOR APQ2 AND APS2 POSTS

To fit on the APQ2 and APS2 posts. The prongs belwo the cap fit into the screw ports of the post. Secure to post with small amount of silicone or adhesive on the prongs.

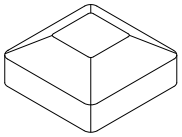

DCP

CAP, POST, 50MM SQUARE

Cast aluminium Cap for push-fit to top of 50mm square posts. Lower edge comes 13mm below top of post, and peak is 12mm above top of post.

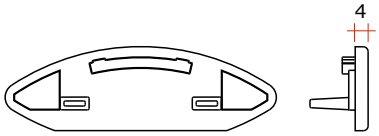

ACT

CAP, SIDE RAIL

Cast aluminium cap for ART Side Rail ends. Commonly attached with 1 off FS4-6 rivet.

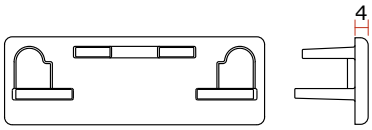

PRCT

CAP, SIDE RAIL

Cast aluminium cap for PRR Side Rail ends. Commonly attached with 1 off FS4-6 rivet.

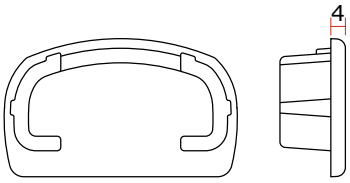

VCT

CAP, SIDE RAIL

Cast aluminium Cap for VRT Side Rail ends. Commonly attached with 1 off FS4-6 rivet.

CAPS - (CONT'D)

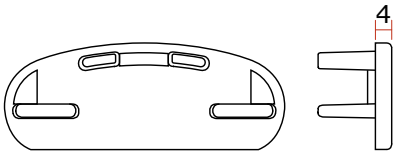

VECT

CAP, SIDE RAIL

Cast aluminium Cap for VRE Side Rail ends.
Commonly attached with 1 off FS4-6 rivet.

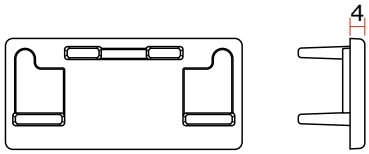

VRCT

CAP, SIDE RAIL

Cast aluminium Cap for VRR Side Rail ends.
Commonly attached with 1 off FS4-6 rivet.

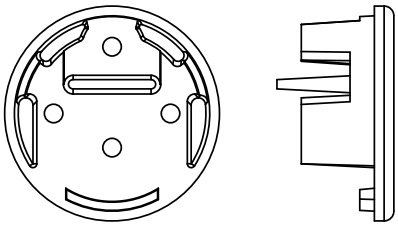

LCS

CAP, SIDE RAIL

Cast aluminium cap for LRR & LRS Side Rail ends.

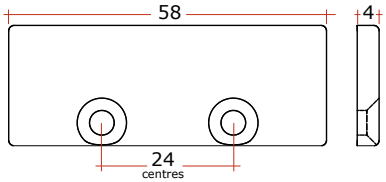

CRCG

CAP, SIDE RAIL

Aluminium cap for CRR Side Rail ends.
Attached with 8 gauge countersunk screws.
4mm Thick.

BRACKETS

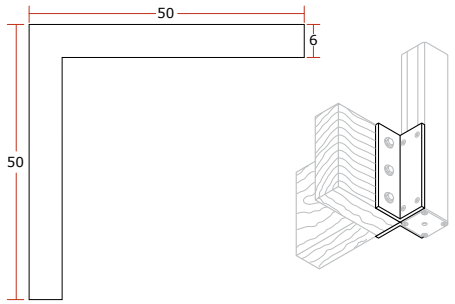

AKP

BRACKET, SIDE FIXED POSTS

For attaching posts to side of decks, especially APQ2 posts on 90º corners of side-fixed applications. SPECIFY length required when ordering; 140mm, 190mm, 240mm or 290mm. Otherwise 190mm will be supplied.
Two required on corners for styles that have no Top Rails. Commonly attached to post with 4 off FV10-19.T1 screws each and to substrate with 3 substrate fasteners each (offset to avoid clashing).

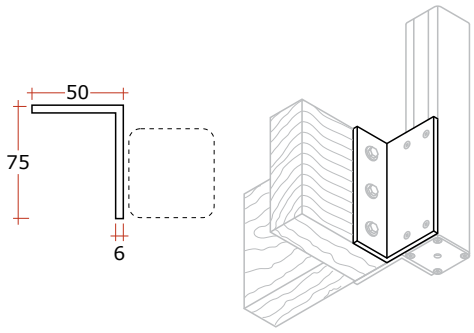

AKPL

BRACKET, SIDE FIXED POSTS

For attaching side-fixed applications of APQ2 posts to 90º corners in on decks where the deck extends past the joist. SPECIFY length required when ordering; 140mm, 190mm, 240mm or 290mm. Otherwise 190mm will be supplied.
Two required on corners for styles that have no Top Rails. Commonly attached to post with 4 off FV10-19.T1 screws each and to substrate with 3 substrate fasteners each (offset to avoid clashing).

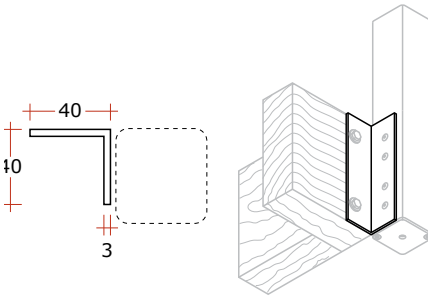

DKP

BRACKET, SIDE FIXED POSTS

For attaching posts to side of decks, especially on 90º corners of side-fixed applications. SPECIFY the length required when ordering; 140mm, 190mm, 240mm or 290mm. Otherwise 190mm will be supplied.
Commonly attached to post with 4 off FR6-4 rivets and to substrate with 2 substrate fasteners each.

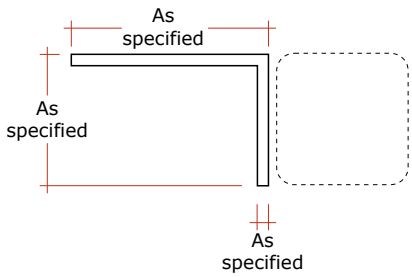

DKPSP

SPECIAL BRACKET, SIDE FIXED POSTS

As per DKP except made out of non-standard angle, to be specified with order. Common example would be Ex: 75 x 50 x 6mm angle, often used on concrete decks.
Commonly attached to post with 4 off FR6-6 rivets.

BRACKETS- (CONT'D)

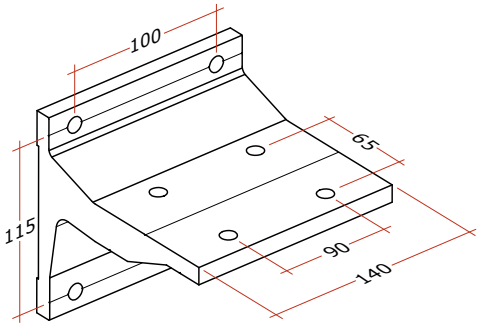

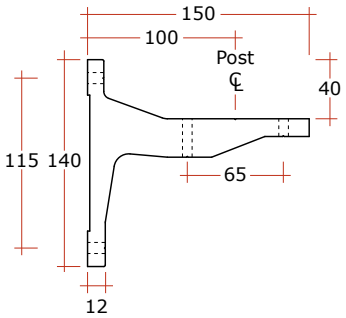

DKG2-014

BRACKET, FOR SIDE MOUNTING WITH GUTTER

Bracket for side mounting in situations involving a gutter. The gutter is mounted just below protruding flange via setting blocks between brackets to allow the gutter to pass in front of the bracket. The post is then top mounted onto the bracket via a base plate. Refer to page 142 for more detail.
Note: excludes supply of the guttering, however desired profile must be mounted using an internal bracket system.

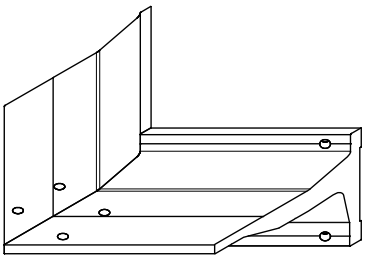

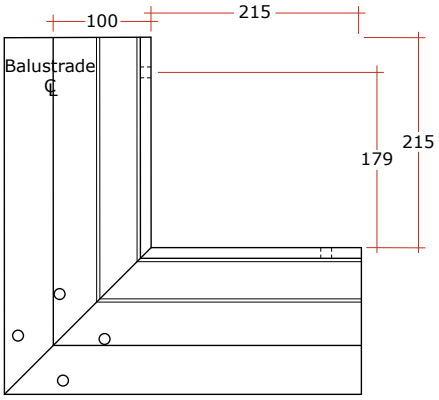

DKG90-043

BRACKET, FOR 90° CORNERS WITH GUTTER

Bracket as per DKG2-014 except welded to suit 90° corner situations. Requires post to be mounted using the BSGF base plate.

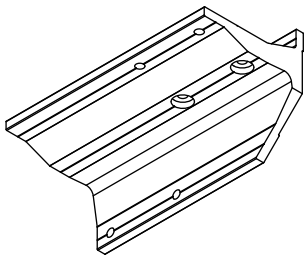

DKG2-030L Left (Illustrated)

DKG2-030L
DKG2-030R

BRACKET, FOR EXTENDING PAST CORNERS WITH GUTTER

300mm long extension bracket where gutter is not continuous around a corner allowing for a standard DKG2 series baseplate to be used.

BRACKETS & PACKERS - (CONT'D)

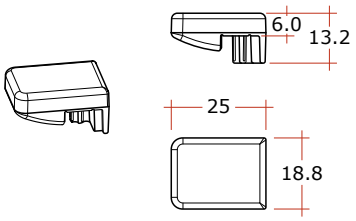

AKS2

BRACKET, GLASS SUPPORT

For attaching to top of AIA insert within the glazing recess of the APE2, API2, APQ2, APS, and APT Posts to provide vertical support to the glass. It is a one-piece Polymer support. Therefore no additional setting block is required.

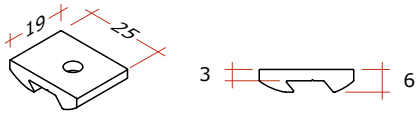

AKSVS

PLATE, GLASS SUPPORT

Similar to AKS2, except used on stairs & ramps etc, up to 40° slopes. Plate sits on top of AIA insert which is cut to slope angle. Attach plate with a small amount of suitable adhesive. Use an SBC block to separate glass and metal.

PLATE, GLASS MOUNT, SET
AKSV plate (Black only) supplied with SBC setting block

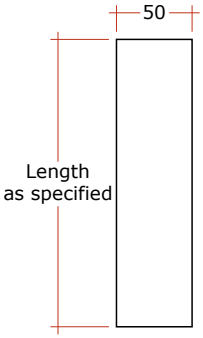

P050A (6mm)
P050B (10mm)
P050C (12mm)
P050D (20mm)
P100B (10mm)
P100C (12mm)

PACKER, FOR SIDE MOUNTED POSTS

Packer for packing out side mounted posts from deck edge. SPECIFY the length required when ordering up to 240mm (longer will incur extra cost).

BRACKETS - (CONT'D)

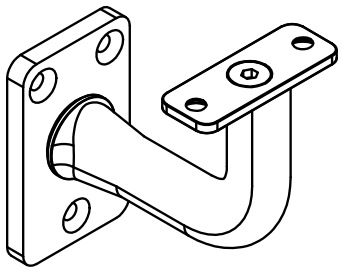

LBWN
LRWN

HANDRAIL BRACKET CONNECTOR

Connects to a post to hold a continuous Side Rail using a wallplate. Attach with FV10-19TR. Drill Ø4.1mm pilot hole.

LBWN = For flat underside side rails. LBWX with P/C LXXN Wallplate.
LRWN = For round underside side rails. LRWX with P/C LXXN Wallplate.

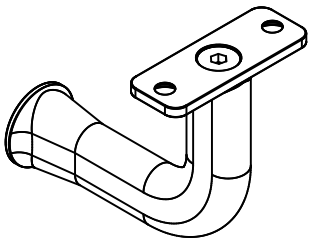

LBWX
LRWX

HANDRAIL BRACKET CONNECTOR
Connects to a post to hold a continuous Side Rail. Attach with FL10-70.

LBWX = For flat underside side rails.
LRWX = For round underside side rails.

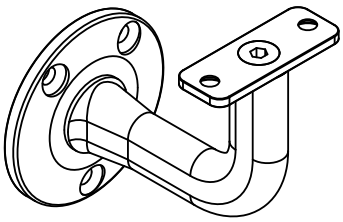

LBWC
LRWC

HANDRAIL BRACKET CONNECTOR
Connects to a wall to hold a continuous Side Rail. 60mm Base. Attach with FV10-19TR.

LBWC = For flat underside side rails.
LRWC = For round underside side rails.

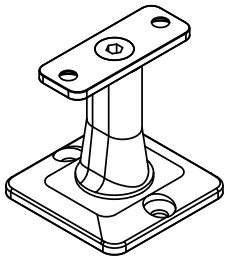

LBTT
LRTT
LSST2

HANDRAIL BRACKET CONNECTOR

Connects to the top of a 50mm square post top to hold a continuous Side Rail.

LBTT = For flat underside side rails.
LRTT = For round underside side rails.
LSST2 = Sloping round connector.

SEMI-FRAMELESS GATE HARDWARE

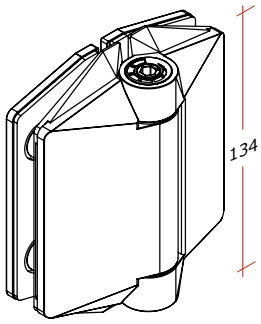

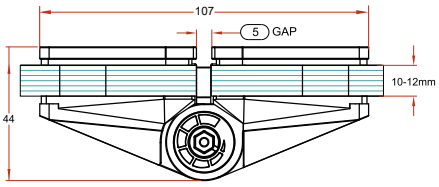

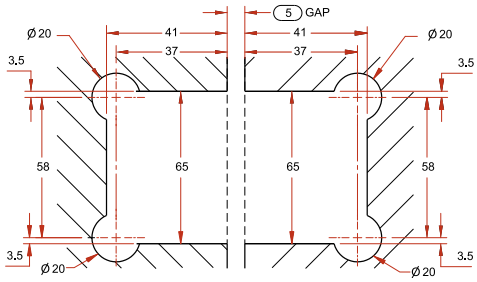

GHGG4.*XX*

GLASS GATE HINGE, GLASS TO GLASS

Stainless-Steel 2205 grade, self-closing safety hinge for glass gates. Soft-closing, single action, non-hold open, with a simple quick-adjust ratchet system. To be used with child proof safety latch. Anti-foot-hold gasket and safety cap included. Accepts 10mm or 12mm toughened glass infill. Glass gate in-line to balustrade. Maximum 900mm wide by 1500mm high, with a 45kg max weight, recommended width is 800mm wide. Requires cut-outs in glass as shown below.

Polaris 125 Series

Finish Options (Supplied in pairs):
GHGG4.PF = Polish finish (default)
GHGG4.SF = Satin finish
GHGG4.BK = Black finish

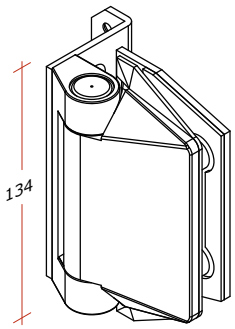

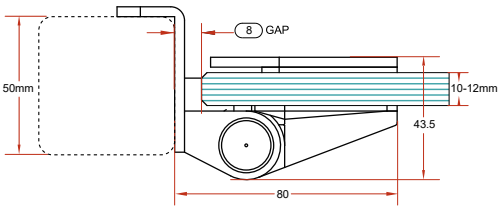

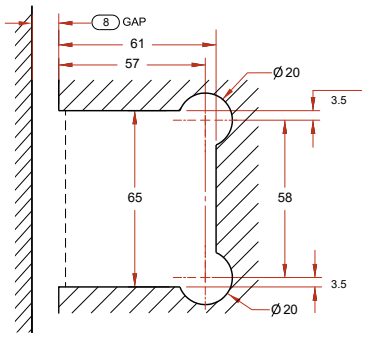

GHPG4.*XX*

GLASS GATE HINGE, POST TO GLASS

Stainless Steel 2205 grade, self-closing safety hinge for glass gates. Soft-closing, single action, non-hold open, with a simple quick-adjust ratchet system. To be used with child proof safety latch. Anti-foot-hold gasket and safety cap included. Accepts 10mm or 12mm toughened glass infill. Glass gate in-line to balustrade post. Maximum 900mm wide by 1500mm high, with a 45kg max weight, recommended width is 800mm wide. Requires cut-outs in glass as shown below.

Polaris 125 Series

Finish Options (Supplied in pairs):
GHPG4.PF = Polish finish (default)
GHPG4.SF = Satin finish
GHPG4.BK = Black finish

UNEX ARCHITECTURAL BARRIERS
Specifications subject to change without notice
Phone 0800 333 777 | www.unex.co.nz

SEMI-FRAMELESS GATE HARDWARE - (CONT'D)

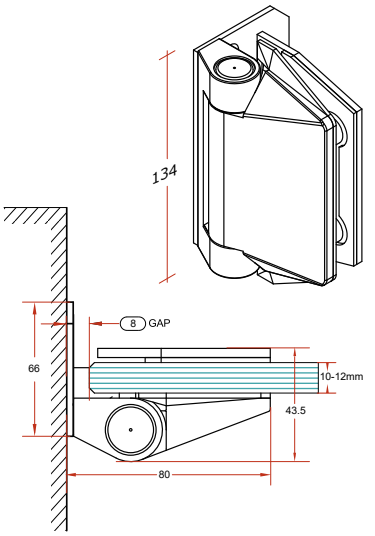

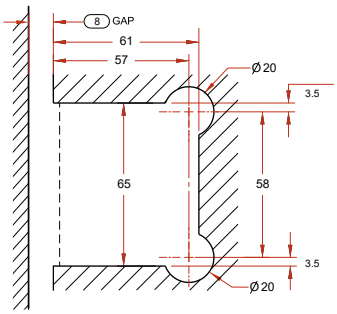

GHWG4.*XX*

GLASS GATE HINGE, WALL TO GLASS

Stainless Steel 2205 grade, self-closing safety hinge for glass gates. Soft-closing, single action, non-hold open, with a simple quick-adjust ratchet system. To be used with child proof safety latch. Anti-foot-hold gasket and safety cap included. Accepts 10mm or 12mm toughened glass infill. Glass gate perpendicular to wall. Maximum 900mm wide with a 45kg max weight. Requires cut-outs in glass as shown below.

Polaris 125 Series

Finish Options (Supplied in pairs):
GHWG4.PF = Polish finish (default)
GHWG4.SF = Satin finish
GHWG4.BK = Black finish

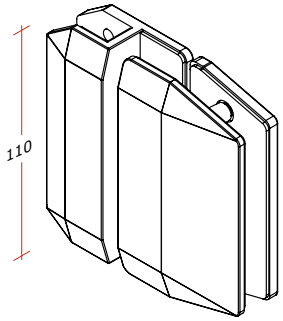

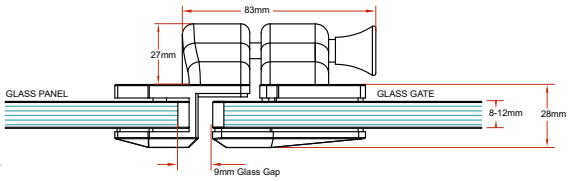

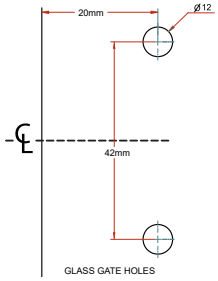

GLGG4.*XX*

GLASS GATE LATCH, GLASS TO GLASS

Stainless Steel 2205 grade. Self-engaging magnetic latch, for latching glass gate in-line to glass balustrade. No Stop required. Requires 2 x Ø12mm holes in glass gate panel, refer to diagram below.

Polaris 700 Series

Finish Options:
GLGG4.PF = Polish finish (default)
GLGG4.SF = Satin finish
GLGG4.BK = Black finish

SEMI-FRAMELESS GATE HARDWARE - (CONT'D)

GLGP4.*XX*

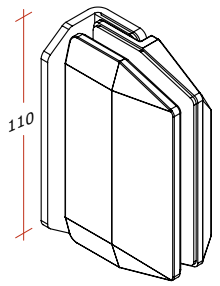

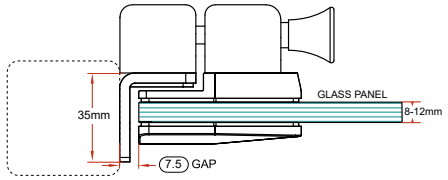

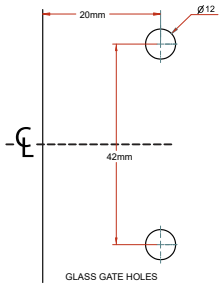

GLASS GATE LATCH, GLASS TO POST

Stainless Steel 2205 grade. Self-engaging magnetic latch for glass gates, for latching to posts. No Stop required. Requires 2 x Ø12mm holes in glass per latch, refer to diagram below. Fasteners as required 3 x M5 S/S (FM5-16A) fasteners to attach to Aluminium post. If glazing recess exists on post make clearance hole through AIA (insure AIA insert used) and fasten to post web, with suitable fasteners.

Finish Options:
GLGP4.PF = Polish finish (default)
GLGP4.SF = Satin finish
GLGP4.BK = Black finish

SETTING BLOCKS, GASKETS, & WEDGES

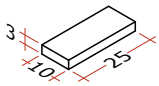

SBC

SETTING BLOCK

3 x 10 x 25mm, self adhesive backing.

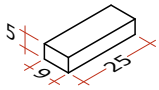

SBG

SETTING BLOCK FOR GATES

5 x 9 x 25mm, self adhesive backing.

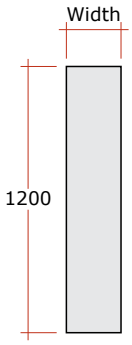

SG24-12
SG36-12
SG42-12
SG50-12
SG120-12

SIDE MOUNTING GASKET

Gaskets for side-mounting situations. Used to increase durability. Placed between post/bracket face and substrate face. 1.5mm thick Neoprene, with a self adhesive backing. No holes.

SG24-12 = 24mm(W) used with DKF & DKG2 brackets (refer pages 158 & 159)
SG36-12 = 36mm(W) used on 40mm(W) post
SG42-12 = 42mm(W) used on 50mm(W) post
SG50-12 = 50mm(W) used on 60mm(W) post
SG120-12 = Used for PK packers

SRR

RETAINED GASKET

Retained backing seal for certain applications, eg.- DZC Channel or MGG2 glazing angle in gate frames.
Compressed thickness = approx 1mm.

SRG20-25
SRG20R

RETAINED BACK SEAL, YELLOW RETAINER

A TPE glazing gasket for the outer or inaccessible glass face. Engages the screwpipe in certain rails, by sliding in prior to assembly. For 8 gauge screwpipes only. Refer to table on page 30 for appropriate wedge to suit.
SRG20-25 applies to purchasing in 25m lengths.
SRG20R applies to purchasing 100m rolls.

SETTING BLOCKS, GASKETS, & WEDGES - (CONT'D)

SRG30-25
SRG30R

RETAINED BACK SEAL, GREEN RETAINER

A TPE glazing gasket for the outer or inaccessible glass face. Engages the screwpipe in certain rails, by sliding in prior to assembly. For 8 gauge screwpipes only. Refer to table on page 30 for appropriate wedge to suit.
SRG30-25 applies to purchasing in 25m lengths.
SRG30R applies to purchasing 100m rolls.

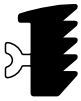

SRG40-25
SRG40R

RETAINED BACK SEAL, CLEAR RETAINER

A TPE glazing gasket for the outer or inaccessible glass face. Engages the screwpipe in certain rails, by sliding in prior to assembly. For 8 gauge screwpipes only. Refer to table on page 30 for appropriate wedge to suit.
SRG40-25 applies to purchasing in 25m lengths.
SRG40R applies to purchasing 100m rolls.

SRG2-70-25
SRG2-70R

RETAINED BACK SEAL

A TPE glazing gasket for the outer or inaccessible glass face. Engages the screwpipe in certain rails, by sliding in prior to assembly. For 8 gauge screwpipes only. Typically used with 6mm and 8mm glass. Compressed thickness = approx 6.8mm
SRG70 applies to purchasing in 25m lengths.
SRG70R applies to purchasing in 100m rolls.

SWE20-25
SWE20R

WEDGE, GREY STRIPE

TPE wedge gasket (with a grey stripe) for use with glass in conjunction with SRG gasket in glazing channels and all glazing recesses. Refer to table on this page for appropriate wedge to suit.
Compressed thickness = approx 2mm.
SWE20-25 applies to purchasing in 25m lengths.
SWE20R applies to purchasing 100m rolls.

SWE25-25
SWE25R

WEDGE, WHITE STRIPE

TPE wedge gasket (with a white stripe) for use with glass in conjunction with SRG gasket in glazing channels and all top rail glazing recesses. Refer to table on this page for appropriate wedge to suit.
Compressed thickness = approx 2.5mm.
SWE25-25 applies to purchasing in 25m lengths.
SWE25R applies to purchasing 100m rolls.

SETTING BLOCKS, GASKETS, & WEDGES - (CONT'D)

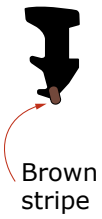

SWE35-25
SWE35R

WEDGE, BROWN STRIPE

TPE wedge gasket (with a brown stripe) for use with glass in conjunction with SRG gasket in glazing channels and all top rail glazing recesses. Refer to table on this page for appropriate wedge to suit.
Compressed thickness = approx 3.5mm.
SWE35-25 applies to purchasing in 25m lengths.
SWE35R applies to purchasing 100m rolls.

SWE50-25
SWE50R

WEDGE, PURPLE STRIPE

TPE wedge gasket (with a purple stripe) for use with 8mm glass in conjunction with SRG gasket in all lower rails and recessed posts with the exception of the DZC extrusion and non-90° corner posts.
Compressed thickness = approx 5mm.
SRE50 applies to purchasing in 25m lengths.
SRE50R applies to purchasing in 100m rolls.

SWE55-25
SWE55R

WEDGE, RED STRIPE

TPE wedge gasket (with a red stripe) for use with 10mm glass in conjunction with SRG gasket in all lower rails and recessed posts with the exception of the DZC extrusion and non-90° corner posts.
Compressed thickness = approx 5.5mm.
SRE55 applies to purchasing in 25m lengths.
SRE55R applies to purchasing in 100m rolls.

TYPICAL WEDGES FOR VARIOUS GLASS THICKNESSES

Glass Thickness	Retaining gasket	Wedge	Colour Code
8mm	SRG70	SWE50	Purple
11.2mm	SRG40	SWE50	Purple
10mm	SRG40	SWE55	Red
12mm	SRG40	SWE35	Brown
13.5mm	SRG30	SWE25	Green
14.28mm	SRG30	SWE25	White
15mm	SRG20	SWE25	White
16.28mm	SRG20	SWE20	Grey

FASTENERS

The following pages give the part number key for each fastener type.

The current Price List gives actual part numbers (i.e. codes) for individual items which are available.

In the hypothetical codes given for the key guides below: *0* are for digits and *X* are for letters.

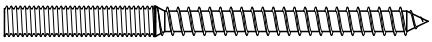

FA*0*-*00*

LAG SCREW

1ST NUMBER = Nominal Diameter, mm
2ND NUMBER = Screw Length, mm
SUFFIX: (none) = Stainless Steel

FA10-140 used for Arena-Points
FA10-80 used for Handrail Brackets to Timber

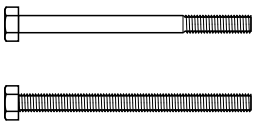

FB*0*-*00*

BOLTS, HEX HEAD

1ST NUMBER = Nominal Diameter, mm
2ND NUMBER = Bolt Length, mm
SUFFIX: (none) = Stainless Steel
G = Hot Dip Galvanized
MS = Mushroom Head

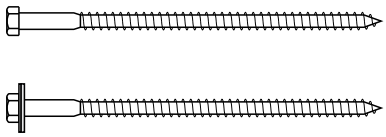

FCS*0*-*00*
FC*0*-*00*

COACHSCREWS

1ST NUMBER = Nominal Diameter, mm
2ND NUMBER = Screw Length, mm
SUFFIX: (none) = Stainless Steel
G = Hot Dip Galvanized
FCS0-00 is a coachscrew only.
FC0-00 is a coachscrew and washer set. E.g. for FC8-165 (which is a set of FCS8-165 & FW8-20N washers).

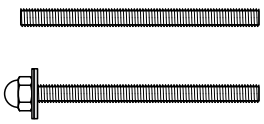

FE*0*-*00*

STUDS FOR EPOXY ANCHORING

For fastening of base plates to concrete substrates using injected epoxy method. Grade 316 Stainless Steel.
1ST NUMBER = Stud Diameter, mm
2ND NUMBER = Stud Overall Length, mm
SUFFIX: (none) = Stud only
S = Stud Set, Including Domenut and Std Washer
L = Stud Set, Including Domenut and Large Washer

FASTENERS - (CONT'D)

Internal 5mm hex drive on most sizes

FI*0*-*00*

CSK HD, SELF-DRILL TIMBER SCREWS

1ST NUMBER	=	Screw Gauge
2ND NUMBER	=	Length, mm
SUFFIX: (none)	=	Stainless Steel (Preferred)

FL*0*-*00*

PAN HEAD S/S MACHINE SCREWS

1ST NUMBER	=	Diameter, mm
2ND NUMBER	=	Length, mm
SUFFIX: (none)	=	Slot Drive
A	=	Allen Key Drive

FL10-70 Used for Handrail Brackets

FM*0*-*00*

CSK HEAD S/S MACHINE SCREWS

1ST NUMBER	=	Diameter, mm
2ND NUMBER	=	Length, mm
SUFFIX: (none)	=	Slot Drive
A	=	Allen Key Drive

HEX NUT

DOME NUT

NYLOC NUT

FN*0*X

NUTS

1ST NUMBER	=	Diameter, mm
SUFFIX: (none)	=	Standard Hex Nut
D	=	Dome Nut
N	=	Nyloc Nut (self locking)

FASTENERS - (CONT'D)

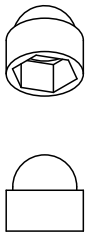

FNC0X

PLASTIC BOLT PROTECTION CAPS

1ST NUMBER = Diameter of corresponding nut, in mm

SUFFIX:
B = Black G = Grey W = White

FNC8B = M8, Black
FNC8W = M8, White
FNC10B = M10, Black
FNC10G = M10, Grey

FP9B

GATE HOLE PLUGS, 9.5MM

1ST NUMBER = Hole Diameter, mm (or Tube Internal Diameter)

SUFFIX:
B = Black
W = White

FP9B = Black
FP9W = White

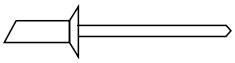

FS0-0

CSK HEAD BLIND RIVETS

Countersunk Head. (CSK Angle = 120°)

1ST NUMBER: INDICATES RIVET DIAMETER
4 = 3.2mm (Drill Ø3.3)
5 = 4.0mm (Drill Ø4.1)
6 = 4.8mm (Drill Ø4.9)

2ND NUMBER: INDICATES GRIP RANGE
4 = 4.8 to 6.4mm
5 = 6.4 to 7.9mm
6 = 7.9 to 9.5mm
8 = 11.1 to 12.7mm
10 = 14.3 to 15.9mm

SUFFIX:
(None) = aluminium rivet, steel stem
S = Stainless Steel Rivet
B = Black Aluminium

FS4-4B = Inner Rail Rivets, Silver
FS4-4 = Inner Rail Rivets, Black
FS4-6 = End Cap Rivets, Black
FS4-4B =

FASTENERS - (CONT'D)

FT0-*00*X

PAN HEAD S/S SELF TAPPING SCREWS

1ST NUMBER	=	Screw Gauge
2ND NUMBER	=	Length (mm)
SUFFIX: (none)	=	Square Drive
.T1	=	Treated to enhance durability
H	=	Self-drilling

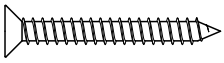

FV0-*00*X

CSK HEAD S/S SELF TAPPING SCREWS

As FT series above, but with a Countersunk Head. (CSK Angle = 90°)

SUFFIX: (none)	=	Square Drive
.T1	=	Treated to enhance durability
TR.T1	=	Truncated Head (for Hinges) and Treated to enhance durability

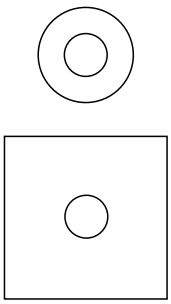

FW0-*00*X

FW8-22
FW8-20N
FW10-21
FW10-50SQ
FW12-21

STAINLESS STEEL FLAT WASHERS

1ST NUMBER	=	Diameter of corresponding screw or bolt, in mm
2ND NUMBER	=	Washer overall diameter/width
SUFFIX: (none)	=	Round Washer
SQ	=	Square Washer (Stainless Steel, 3mm thick)
N	=	Neoprene backed Washer

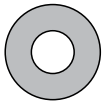

FWP0-*00*X

FWP8-22G
FWP10-22G
FWP10-24G

POLYMER WASHERS

1ST NUMBER	=	Diameter of corresponding screw or bolt, in mm
2ND NUMBER	=	Washer overall diameter/ width
SUFFIX:		
G	=	Grey

Principally used to provide a barrier between aluminium and stainless steel to enhance durability.

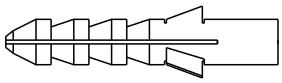

FY0-*00*

NYLON PLUG

1ST NUMBER	=	Plug / Hole Ø
2ND NUMBER	=	Length / Hole Depth (mm)

(Use FT or FV series screws; 10 gauge requires FY6, 12 or 14 gauge requires FY8).

FASTENERS - (CONT'D)

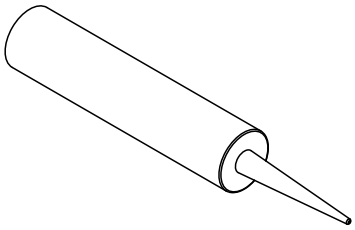

TAS70-03B

ADHESIVE

Elastic Simson ISR suitable for securing joints with UNEX handrails or firmly securing aesthetic end caps. 290ml cartridge

SUFFIX:
B = Black
G = Grey

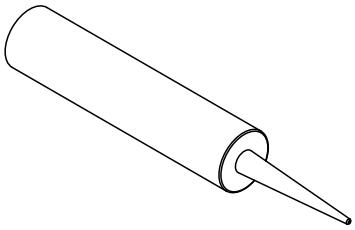

TASV60B

ADHESIVE

Structural Glazing silcone. 290ml cartridge

SUFFIX:
B = Black
C = Clear

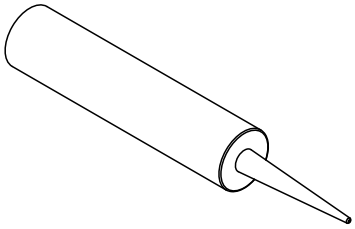

TASG

ADHESIVE, FOR SUBSTRATE FASTENERS

Adhesive Sika Supergrip 2 Hour. Used to increase substrate fastener pullout load rating, on timber decks in particular situations.
Will apply approx:
80 off FC8-165 top mounted fasteners, or
110 off FC8-165 side mounted fasteners

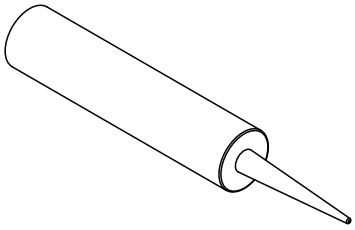

TASD-795

DOWSIL 795 STRUCTUAL GLAZING SILICONE FOR SUSPENDED JOINTS

Used for bonding glass to posts in Semi-Frameless balustrade systems with no side rail.

For Vetro and Surreal styles, both vertical edges of the glass shall be fully bonded to the posts using structural silicone, for the full height of the post and full thickness of the glass.

EPCON C6 EF

Epcon C6 EF series is classified as a 'Dangerous Goods' and therefore has freight complications.

TEC2

Epoxy cartridge Epcon C6 EF, 600ml. Will apply approx 63x FE8-105 studs or 45x FE10-115 studs. Nozzles not included.

TEG2

Dispensing gun for TEC epoxy cartridge.

TEN2

Disposable nozzle for TEC epoxy cartridge.

TOOLS & ACCESSORIES

TGL-05L

LANOLIN GREASE

Lanolin Grease. Used as coating to prevent corrosion and increase durability of fasteners and other products.
TGL-05L = 0.5 Litres of Grease

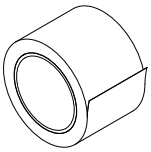

TSS75
TSS90

SEPARATOR TAPE

Single-sided UV stable tape used to separate baseplates from steel subtrates.
TSS75 = 75mm x 25m rolls.
TSS90 = 90mm x 25m rolls.

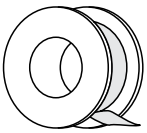

TTAM

TEFLON TAPE

Used to separate stainless steel fasteners where it could be in contact with unprotected aluminium, to enhance durability. 0.075mm thick x 10m tape.

CHAPTER 2 - SEMI-FRAMELESS GLASS STYLE SPECIFICATIONS

Design Wind Speeds : General pg47

Design Wind Speeds : NZS 3604 .....pg48

Glass Thickness Requirements – Important Notice pg49

Balustrade Deflection pg50

SPEC ID	STYLE SPECIFICATIONS	
SS.35.00	'Vetro' (No Rail)	pg51
SS.36.00	'Surreal' (No Rail)	pg58

DESIGN WIND SPEEDS : GENERAL

(1) For all balustrade styles with a solid infill e.g. Metropolis, Panorama, or Arena-Points the strength of the members and the fixings must be strong enough to resist the maximum ultimate wind load that is likely to be imposed upon them. This load can be determined from the ultimate Design Wind Speed applicable to the site and the balustrade location in the building.

(2) The Design Wind Speed must be determined from the appropriate New Zealand loading codes as follows:

(a) For all balustrades, the ultimate Design Wind Speed should be determined from AS/NZS 1170.2 Wind Actions for use with Loading Class N07C/N07R.

The Design Wind Speed for each building site may be determined from either:
(i) Directly from the method given in the applicable loading standard.
(ii) By referring to a "qualified engineer", the design engineer for the building, or the Territorial Authority.

(b) For buildings that are within the scope of NZS 3604:1999.

(c) The ultimate Design Wind Speed for residential type buildings should be determined from NZS 4203:2016 for use with No Fall Loading Class.

(3) In this manual, design wind pressures on external glazed or solid infill balustrade panels have been calculated from the formula below:

$$pu = 0.6\ Cpn.\ Vd^2$$

Where:
pu = the nett wind pressure on the infill in Pascals
Cpn = 1.2 and is defined in AS/NZS 1170.2 Appendix D
Vd = the ultimate design wind speed in metres per second derived from the appropriate standard for the balustrades location and position.

The above value of Cpn is appropriate for most balustrade situations, a higher value will apply where:
(a) the balustrade has a free end, i.e. it does not return to the building or the return has an open construction such a balusters.
(b) a balustrade on a roof top.

In these situations, reference should be made to a "qualified engineer" or "Wind Consultant" to determine an appropriate value for Cpn. Using this value of Cpn, calculate a revised value of effective wind speed Ve to determine the post or clamp spacing and glass thickness required from the tables in this Manual.

Where:
Ve = 0.91Vd Cpn½

Where:
Vd = the wind speed determined generally for this building

DESIGN WIND SPEEDS: NZS 3604

This method was the procedure given in NZS 3604:2011 to establish a Wind Zone and a corresponding Ultimate Design Wind Speed for a particular site. Pending the revision of NZS 3604 to align with AS/NZS 1170, this method should only used for barriers on timber framed residences with the consent of the Territorial Authority.

The Table below utilises the procedure given in Chapter 5 of NZS 3604:2011 *Timber Framed Buildings*. By following the steps in Table 5, an appropriate "Wind Zone" can be established for most building sites i.e. Low, Medium, High, Very High, or Extremely High.

These zones can be converted to Design Wind Speeds from the following Table.

WIND ZONE From Table 5.1 of NZS 3604:2011	DESIGN WIND SPEED (m/s)
L or M	37
H	44
VH	50
EH	55

These Wind Speeds can be used in the tables in Style Specification and Fixing Specification chapters to determine the post or clamp spacing for any balustrade.

GLASS REQUIREMENTS – IMPORTANT NOTICE

1. GLASS MANUFACTURED TO AS/NZS 2208

All glass used in balustrading shall be Grade A Toughened Safety Glass, or Toughened-Laminated Safety Glass where specified, manufactured by a reputable glass manufacturer to meet the requirements of AS/NZS 2208. Glass shall be selected and used in accordance with the requirements of NZS 4223, which should be referred to for a full guide.

3. TOUGHENED LAMINATED SAFETY GLASS

For Toughened-Laminated Safety Glass, refer to the supplier fro suitability of the interlayer lamination in the location where it is being used. Some suppliers may allow for some delamination (causing an opaque frosted effect) over a period of time. UNEX Systems does not take responsibility for the suitability of the interlayer lamination.

3. GLASS THICKNESSES

The Loading Code AS/NZS 1170 includes significant point loads on the glass edges. At the time of printing this manual, neither Standards New Zealand nor the Department of Building and Housing had published data on the required thickness of glass to withstand these loads. Additionally the glass thickness cannot be calculated by normal engineering methods.

The glass thicknesses and spans given in this manual are therefore based on either NZS 4223: Part 4:2008, AS 1288, previously published data from Glass Supply companies, or on the results of a series of point load tests conducted by UNEX. It is believed to be the most accurate information available at the time of publication to comply with the Building Code.

Please note however, that further research together with subsequent changes to the Building Code or other standards may modify some or all of this information.

BALUSTRADE DEFLECTION

GENERAL OVERVIEW

Balustrade deflection refers to the degree of 'movement' of the balustrade when certain load is applied. The practical relevance of this deflection relates to the subjective feeling one may experience when asserting a force on the balustrade, as excessive movement may cause a sense of apprehension. Deflection should not be confused with safety in respect of the ultimate balustrade strength to resist failure. A guideline for the amount of balustrade deflection deemed acceptable can be derived from "Guidance on Barrier Design" March 2012, published by what was then the Department of Building and Housing. Below are several relevant excerpts from clause 3.5 of this document relating to balustrade deflection. The original document should be referred to directly for further information if required.

- "Beyond the NZBC requirements for barriers to be of adequate strength and stiffness to sustain the applied loads without causing loss of amenity through undue deflection, there are no further mandatory requirements for deflections."
- "The total horizontal displacement is recommended not to exceed 30mm under barrier and wind loads described in B1/VM1."
- "For serviceability, the horizontal deflection of post or clamp and rail balustrade systems (measured at the handrail/top rail) may be considered acceptable if it does not exceed H/60 + L/240 or 30mm, whichever is smaller, where H is the height of the handrail/top rail above the top of the supporting structure (deck or slab) and L is the distance between the centres of the supporting posts to the handrail..."

APPLICATION IN THIS MANUAL

The specifications in this manual (Issue 12.0) have been calculated with a target maximum deflection not to exceed 30mm for frameless glass styles. These deflections may be exceeded by up to 10% for some "unlikely to occur" loading combinations.

'VETRO' (NO RAIL)

This specification details the members to be used, glass thicknesses required and the maximum spacing for the various posts for this style. A separate specification must be referred to for fixing to the substrate (refer to Chapter 3). Post spacing must not exceed the lesser of the spacing from both Chapter 2 and Chapter 3. NOTE: For the Vetro Style we recommend always using 4 Substrate fixings per baseplate to give lateral stability to the post, even if 2 fixings is structurally adequate. Refer to Page 50 for notes on balustrade deflection.

1. Glass shall be **GRADE A TOUGHENED LAMINATED** SAFETY GLASS WITH SENTRYGLAS (SGP) INTERLAYER suitable for exterior applications in accordance with AS/NZS 2208, with a minimum thickness as determined from the Table below. INTERLAYER shall be 1.2mm thick. Glass shall be supported and glazed in accordance with NZS 4223. All exposed edges to be Flat Polished.
2. Fabrication and Installation to be in accordance with Assembly Specification AS.35.00 on Page 95, the Installation Guides in Chapter 5, and all other relevant portions of the UNEX Fabricators Manual.
3. APS2 and APE2 may be used for either "top fixed" or "side fixed".
4. **Both the vertical edges of the glass shall fully attach to the post with TASV60B structural silicone, for the full height and thickness of the glass, applied in accordance with manufacturers instructions.**
5. The balustrade shall be constructed such that the geometry of the balustrade shall comply with Acceptable Solutions F4/AS1. This includes the following (but not limited to): The minimum barrier height requirement, the maximum gap allowable and the avoidance of non-complying toeholds.

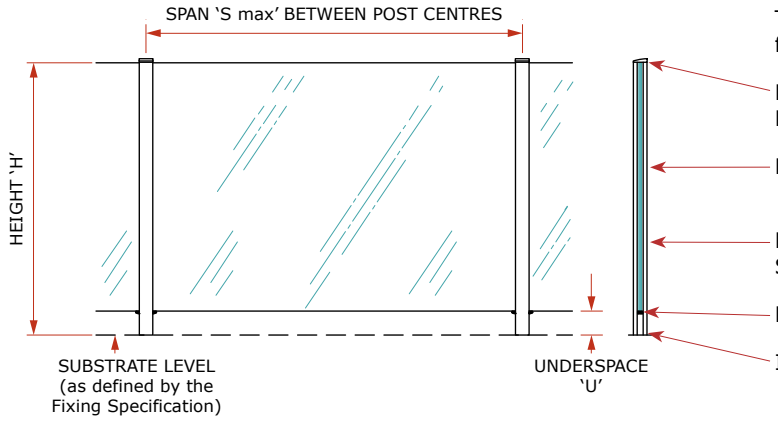

The balustrade shall be fabricated from the following items:

POST CAPS: ACFIS, ACEIS, ACPR, or ACPE. Refer to Chapter 1 for options.

POSTS: APS2 or APE2 for in-line posts

EVA TOUGHENED LAMINATED GLASS PANELS. See table below

BRACKET: AKS2

INSERT: AIA

MAXIMUM POST CENTRES 'S max' (metres)

ALWAYS TAKE THE LESSER OF THE VALUE BELOW AND THE VALUE FROM THE FIXING SPECIFICATION

HEIGHT(3)	POST TYPE(2)	SGP Toughened Laminated Glass Thickness	Line No.	LOADING CLASS(1)																		
				N07C/N07R								N03R	Not preventing falls									
				Design Wind Speed(4)									Design Wind Speed(4)									
				VH			EH						M			H			VH		EH	
				50	52	54	56	58	60	62	64	N/A	38	40	42	44	46	48	50	52	54	56
1.0	APS2	11.2	1	1.12	1.12	1.12	1.12	1.12	1.08	1.01	0.95	1.55	1.69	1.63	1.58	1.53	1.49	1.45	1.41	1.37	1.33	1.24
		13.2	2	1.12	1.12	1.12	1.12	1.12	1.08	1.01	0.95	1.71	2.03	1.96	1.90	1.84	1.79	1.68	1.55	1.44	1.33	1.24
	APE2	13.2	3	1.59	1.59	1.59	1.57	1.53	1.50	1.44	1.35	1.99	2.03	1.96	1.90	1.84	1.79	1.74	1.69	1.64	1.60	1.57
1.1	APS2	11.2	4	1.00	1.00	1.00	0.99	0.93	0.86	0.81	0.76	1.55	1.75	1.69	1.64	1.59	1.47	1.35	1.25	1.15	1.07	0.99
		13.2	5	1.00	1.00	1.00	0.99	0.93	0.86	0.81	0.76	1.71	2.10	1.95	1.76	1.61	1.47	1.35	1.25	1.15	1.07	0.99
	APE2	13.2	6	1.42	1.42	1.42	1.42	1.32	1.23	1.16	1.08	1.78	2.10	2.03	1.96	1.90	1.85	1.80	1.75	1.64	1.52	1.42
1.2	APS2	11.2	7	0.89	0.89	0.87	0.81	0.76	0.71	0.68	0.68	1.55	1.76	1.59	1.44	1.31	1.20	1.10	1.02	0.94	0.87	0.81
		13.2	8	0.89	0.89	0.87	0.81	0.76	0.71	0.68	0.68	1.71	1.76	1.59	1.44	1.31	1.20	1.10	1.02	0.94	0.87	0.81
	APE2	13.2	9	1.28	1.28	1.25	1.16	1.08	1.01	0.95	0.89	1.71	2.17	2.09	2.03	1.88	1.72	1.58	1.45	1.34	1.25	1.16

1. LOADING CLASS: Refer to Page 142 of this Manual for the scope of the Loading Class designations.
2. POST TYPES: Refer to Chapter 1 for details.
3. HEIGHT 'H': is the overall height of the balustrade above the substrate level shown. Interpolate for Heights between those shown.
4. DESIGN WIND SPEED: in m/s, Refer to Pages 47 to 48 for details of applicable wind codes and the methods for determining the Design Wind Speed.

'VETRO' (ART SIDE RAIL)

This specification details the members to be used, glass thicknesses required and the maximum spacing for the various posts for this style. A separate specification must be referred to for fixing to the substrate (refer to Chapter 3). Post spacing must not exceed the lesser of the spacing from both Chapter 2 and Chapter 3. NOTE: For the Vetro Style we recommend always using 4 Substrate fixings per baseplate to give lateral stability to the post, even if 2 fixings is structurally adequate. Refer to Page 50 for notes on balustrade deflection.

1. Glass shall be GRADE A TOUGHENED SAFETY GLASS suitable for exterior applications in accordance with AS/NZS 2208, with a minimum thickness as determined from the Table below. Glass shall be supported and glazed in accordance with NZS 4223. All exposed edges to be Flat Polished.
2. Fabrication and Installation to be in accordance with Assembly Specification AS.35.05S on Page 96, the Installation Guides in Chapter 5, and all other relevant portions of the UNEX Fabricators Manual.
3. Side Rail height shall not be less than the minimum barrier height, as required in F4/AS1.
4. The balustrade shall be constructed such that the geometry of the balustrade shall comply with Acceptable Solutions F4/AS1. This includes the following (but not limited to): The minimum barrier height requirement, the maximum gap allowable and the avoidance of non-complying toeholds.

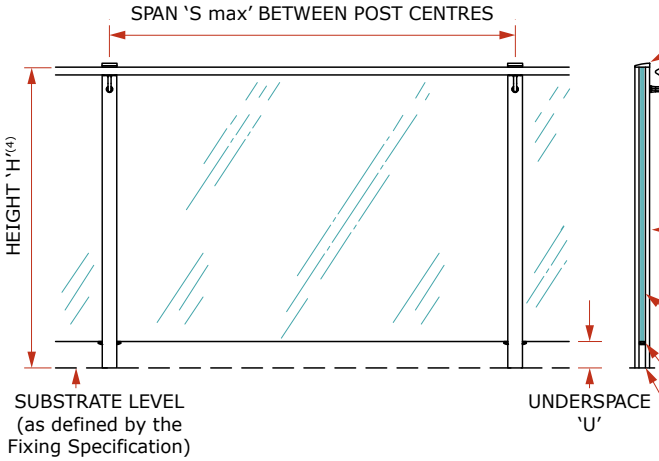

The balustrade shall be fabricated from the following items:

POST CAPS: ACFIS, ACEIS, ACPR, or ACPE. Refer to Chapter 1 for options.

SIDE RAIL: ART/DRH

LBWN8 Bracket. Brackets centred on posts.

POSTS: APS2 or APE2

TOUGHENED SAFETY GLASS PANELS. See table below.

BRACKET: AKS2

INSERT: AIA

MAXIMUM POST CENTRES 'S max' (metres)

ALWAYS TAKE THE LESSER OF THE VALUE BELOW AND THE VALUE FROM THE FIXING SPECIFICATION

HEIGHT(3)	POST TYPE(2)	Toughened Laminated Glass Thickness	Line No.	LOADING CLASS(1)																			
				N07C/N07R								N03R	Not preventing falls										
				Design Wind Speed(4)									Design Wind Speed(4)										
				VH			EH						M			H			VH			EH	
				50	52	54	56	58	60	62	64	N/A	38	40	42	44	46	48	50	52	54	56
1.0	APS2	10	1	1.20	1.20	1.20	1.20	1.12	1.04	0.98	0.92	1.62	2.13	2.06	1.99	1.93	1.78	1.63	1.50	1.39	1.29	1.20
		12	2	1.20	1.20	1.20	1.20	1.12	1.04	0.98	0.92	1.62	2.55	2.35	2.13	1.94	1.78	1.63	1.50	1.39	1.29	1.20
	APE2	12	3	1.62	1.62	1.62	1.62	1.60	1.49	1.40	1.31	1.62	2.55	2.47	2.39	2.32	2.25	2.19	2.13	1.99	1.84	1.71
1.1	APS2	10	4	1.06	1.06	1.03	0.96	0.89	0.83	0.78	0.73	1.62	2.08	1.88	1.70	1.55	1.42	1.30	1.20	1.11	1.03	0.96
		12	5	1.06	1.06	1.03	0.96	0.89	0.83	0.78	0.73	1.62	2.08	1.88	1.70	1.55	1.42	1.30	1.20	1.11	1.03	0.96
	APE2	12	6	1.52	1.52	1.48	1.37	1.28	1.20	1.12	1.05	1.62	2.65	2.56	2.44	2.22	2.04	1.87	1.72	1.59	1.48	1.37
1.2	APS2	10	7	0.94	0.90	0.84	0.78	0.73	0.68	0.68	0.68	1.62	1.69	1.53	1.38	1.26	1.15	1.06	0.98	0.90	0.84	0.78
		12	8	0.94	0.90	0.84	0.78	0.73	0.68	0.68	0.68	1.62	1.69	1.53	1.38	1.26	1.15	1.06	0.98	0.90	0.84	0.78
	APE2	12	9	1.33	1.30	1.20	1.12	1.04	0.98	0.91	0.86	1.62	2.43	2.20	1.99	1.81	1.66	1.52	1.41	1.30	1.20	1.12

1. LOADING CLASS: Refer to Page 142 of this Manual for the scope of the Loading Class designations.
2. POST TYPES: Refer to Chapter 1 for details.
3. HEIGHT 'H': is the overall height of the balustrade above the substrate level shown. Interpolate for Heights between those shown.
4. DESIGN WIND SPEED: in m/s, Refer to Pages 47 to 48 for details of applicable wind codes and the methods for determining the Design Wind Speed.

'VETRO' (PRR SIDE RAIL)

This specification details the members to be used, glass thicknesses required and the maximum spacing for the various posts for this style. A separate specification must be referred to for fixing to the substrate (refer to Chapter 3). Post spacing must not exceed the lesser of the spacing from both Chapter 2 and Chapter 3. NOTE: For the Vetro Style we recommend always using 4 Substrate fixings per baseplate to give lateral stability to the post, even if 2 fixings is structurally adequate. Refer to Page 50 for notes on balustrade deflection.

1. Glass shall be GRADE A TOUGHENED SAFETY GLASS suitable for exterior applications in accordance with AS/NZS 2208, with a minimum thickness as determined from the Table below. Glass shall be supported and glazed in accordance with NZS 4223. All exposed edges to be Flat Polished.
2. Fabrication and Installation to be in accordance with Assembly Specification AS.35.06S on Page 97, the Installation Guides in Chapter 5, and all other relevant portions of the UNEX Fabricators Manual.
3. Side Rail height shall not be less than the minimum barrier height, as required in F4/AS1.
4. The balustrade shall be constructed such that the geometry of the balustrade shall comply with Acceptable Solutions F4/AS1. This includes the following (but not limited to): The minimum barrier height requirement, the maximum gap allowable and the avoidance of non-complying toeholds.

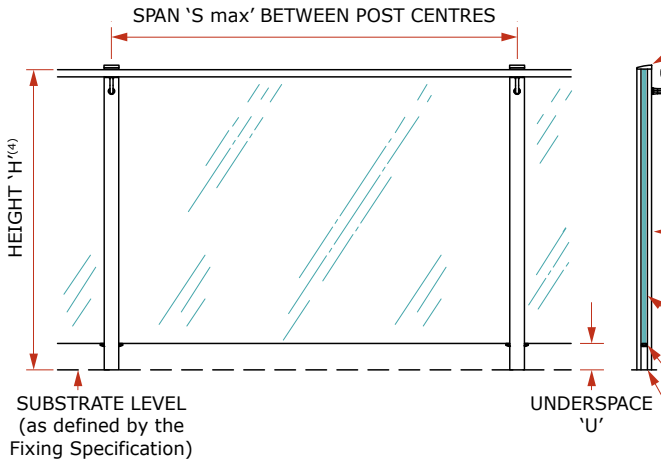

The balustrade shall be fabricated from the following items:

POST CAPS: ACFIS, ACEIS, ACPR, or ACPE. Refer to Chapter 1 for options.

SIDE RAIL: PRR/DRH

LBWN8 Bracket. Brackets centred on posts.

POSTS: APS2 or APE2

TOUGHENED SAFETY GLASS PANELS. See table below.

BRACKET: AKS2

INSERT: AIA

MAXIMUM POST CENTRES 'S max' (metres)

ALWAYS TAKE THE LESSER OF THE VALUE BELOW AND THE VALUE FROM THE FIXING SPECIFICATION

HEIGHT(3)	POST TYPE(2)	EVA Toughened Laminated Glass Thickness	Line No.	LOADING CLASS(1)																		
				N07C/N07R								N03R	Not preventing falls									
				Design Wind Speed(4)									Design Wind Speed(4)									
				VH			EH						M			H			VH		EH	
				50	52	54	56	58	60	62	64	N/A	38	40	42	44	46	48	50	52	54	56
1.0	APS2	10	1	1.20	1.20	1.20	1.20	1.12	1.04	0.98	0.92	1.70	1.69	1.63	1.58	1.53	1.49	1.45	1.41	1.37	1.29	1.20
		12	2	1.20	1.20	1.20	1.20	1.12	1.04	0.98	0.92	1.71	2.03	1.96	1.90	1.84	1.78	1.63	1.50	1.39	1.29	1.20
	APE2	12	3	1.69	1.64	1.60	1.57	1.53	1.49	1.40	1.31	1.82	2.03	1.96	1.90	1.84	1.79	1.74	1.69	1.64	1.60	1.57
1.1	APS2	10	4	1.06	1.06	1.03	0.96	0.89	0.83	0.78	0.73	1.70	1.75	1.69	1.64	1.55	1.42	1.30	1.20	1.11	1.03	0.96
		12	5	1.06	1.06	1.03	0.96	0.89	0.83	0.78	0.73	1.71	2.08	1.88	1.70	1.55	1.42	1.30	1.20	1.11	1.03	0.96
	APE2	12	6	1.52	1.52	1.48	1.37	1.28	1.20	1.12	1.05	1.82	2.10	2.03	1.96	1.90	1.85	1.80	1.72	1.59	1.48	1.37
1.2	APS2	10	7	0.94	0.90	0.84	0.78	0.73	0.68	0.68	0.68	1.70	1.69	1.53	1.38	1.26	1.15	1.06	0.98	0.90	0.84	0.78
		12	8	0.94	0.90	0.84	0.78	0.73	0.68	0.68	0.68	1.71	1.69	1.53	1.38	1.26	1.15	1.06	0.98	0.90	0.84	0.78
	APE2	12	9	1.35	1.30	1.20	1.12	1.04	0.98	0.91	0.86	1.71	2.17	2.09	1.99	1.81	1.66	1.52	1.41	1.30	1.20	1.12

1. LOADING CLASS: Refer to Page 142 of this Manual for the scope of the Loading Class designations.
2. POST TYPES: Refer to Chapter 1 for details.
3. HEIGHT 'H': is the overall height of the balustrade above the substrate level shown. Interpolate for Heights between those shown.
4. DESIGN WIND SPEED: in m/s, Refer to Pages 47 to 48 for details of applicable wind codes and the methods for determining the Design Wind Speed.

'VETRO' (VRE SIDE RAIL)

This specification details the members to be used, glass thicknesses required and the maximum spacing for the various posts for this style. A separate specification must be referred to for fixing to the substrate (refer to Chapter 3). Post spacing must not exceed the lesser of the spacing from both Chapter 2 and Chapter 3. NOTE: For the Vetro Style we recommend always using 4 Substrate fixings per baseplate to give lateral stability to the post, even if 2 fixings is structurally adequate. Refer to Page 50 for notes on balustrade deflection.

1. Glass shall be GRADE A TOUGHENED SAFETY GLASS suitable for exterior applications in accordance with AS/NZS 2208, with a minimum thickness as determined from the Table below. Glass shall be supported and glazed in accordance with NZS 4223. All exposed edges to be Flat Polished.
2. Fabrication and Installation to be in accordance with Assembly Specification AS.35.08S on Page 98, the Installation Guides in Chapter 5, and all other relevant portions of the UNEX Fabricators Manual.
3. Side Rail height shall not be less than the minimum barrier height, as required in F4/AS1.
4. The balustrade shall be constructed such that the geometry of the balustrade shall comply with Acceptable Solutions F4/AS1. This includes the following (but not limited to): The minimum barrier height requirement, the maximum gap allowable and the avoidance of non-complying toeholds.

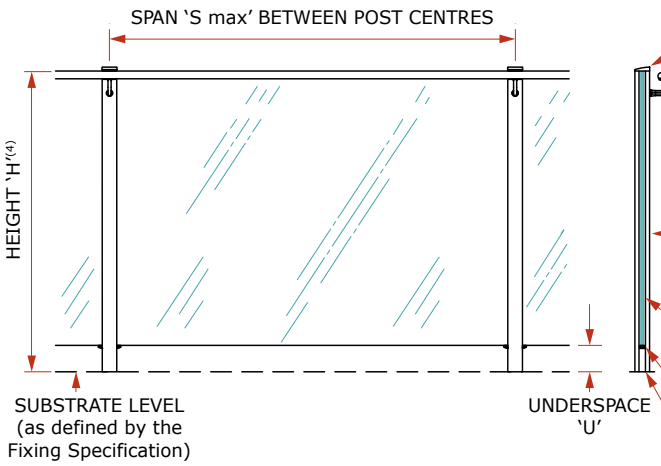

The balustrade shall be fabricated from the following items:

POST CAPS: ACFIS, ACEIS, ACPR, or ACPE. Refer to Chapter 1 for options.

SIDE RAIL: VRE/DRH

LBWN8 Bracket. Brackets centred on posts.

POSTS: APS2 or APE2

TOUGHENED SAFETY GLASS PANELS. See table below.

BRACKET: AKS2

INSERT: AIA

MAXIMUM POST CENTRES 'S max' (metres)

ALWAYS TAKE THE LESSER OF THE VALUE BELOW AND THE VALUE FROM THE FIXING SPECIFICATION

HEIGHT(3)	POST TYPE(2)	Toughened Laminated Glass Thickness	Line No.	LOADING CLASS(1)																			
				N07C/N07R								N03R	Not preventing falls										
				Design Wind Speed(4)									Design Wind Speed(4)										
				VH			EH						M			H			VH			EH	
				50	52	54	56	58	60	62	64	N/A	38	40	42	44	46	48	50	52	54	56
1.0	APS2	10	1	1.17	1.17	1.17	1.17	1.12	1.04	0.98	0.92	1.17	1.69	1.63	1.58	1.53	1.49	1.45	1.41	1.37	1.29	1.20
		12	2	1.17	1.17	1.17	1.17	1.12	1.04	0.98	0.92	1.17	2.03	1.96	1.90	1.84	1.78	1.63	1.50	1.39	1.29	1.20
	APE2	12	3	1.17	1.17	1.17	1.17	1.17	1.17	1.17	1.17	1.17	2.03	1.96	1.90	1.84	1.79	1.74	1.69	1.64	1.60	1.57
1.1	APS2	10	4	1.06	1.06	1.03	0.96	0.89	0.83	0.78	0.73	1.17	1.75	1.69	1.64	1.55	1.42	1.30	1.20	1.11	1.03	0.96
		12	5	1.06	1.06	1.03	0.96	0.89	0.83	0.78	0.73	1.17	2.08	1.88	1.70	1.55	1.42	1.30	1.20	1.11	1.03	0.96
	APE2	12	6	1.17	1.17	1.17	1.17	1.17	1.17	1.12	1.05	1.17	2.10	2.03	1.96	1.90	1.85	1.80	1.72	1.59	1.48	1.37
1.2	APS2	10	7	0.94	0.90	0.84	0.78	0.73	0.68	0.68	0.68	1.17	1.69	1.53	1.38	1.26	1.15	1.06	0.98	0.90	0.84	0.78
		12	8	0.94	0.90	0.84	0.78	0.73	0.68	0.68	0.68	1.17	1.69	1.53	1.38	1.26	1.15	1.06	0.98	0.90	0.84	0.78
	APE2	12	9	1.17	1.17	1.17	1.12	1.04	0.98	0.91	0.86	1.17	2.17	2.09	1.99	1.81	1.66	1.52	1.41	1.30	1.20	1.12

1. LOADING CLASS: Refer to Page 142 of this Manual for the scope of the Loading Class designations.
2. POST TYPES: Refer to Chapter 1 for details.
3. HEIGHT 'H': is the overall height of the balustrade above the substrate level shown. Interpolate for Heights between those shown.
4. DESIGN WIND SPEED: in m/s, Refer to Pages 47 to 48 for details of applicable wind codes and the methods for determining the Design Wind Speed.

'VETRO' (VRR SIDE RAIL)

This specification details the members to be used, glass thicknesses required and the maximum spacing for the various posts for this style. A separate specification must be referred to for fixing to the substrate (refer to Chapter 3). Post spacing must not exceed the lesser of the spacing from both Chapter 2 and Chapter 3. NOTE: For the Vetro Style we recommend always using 4 Substrate fixings per baseplate to give lateral stability to the post, even if 2 fixings is structurally adequate. Refer to Page 50 for notes on balustrade deflection.

1. Glass shall be GRADE A TOUGHENED SAFETY GLASS suitable for exterior applications in accordance with AS/NZS 2208, with a minimum thickness as determined from the Table below. Glass shall be supported and glazed in accordance with NZS 4223. All exposed edges to be Flat Polished.
2. Fabrication and Installation to be in accordance with Assembly Specification AS.35.12S on Page 99, the Installation Guides in Chapter 5, and all other relevant portions of the UNEX Fabricators Manual.
3. Side Rail height shall not be less than the minimum barrier height, as required in F4/AS1.
4. The balustrade shall be constructed such that the geometry of the balustrade shall comply with Acceptable Solutions F4/AS1. This includes the following (but not limited to): The minimum barrier height requirement, the maximum gap allowable and the avoidance of non-complying toeholds.

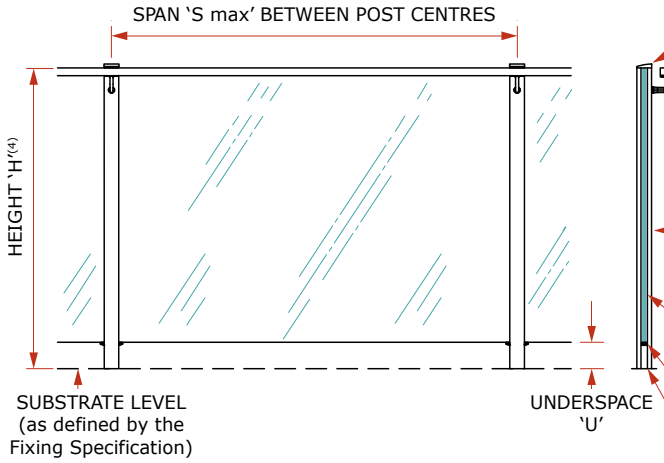

The balustrade shall be fabricated from the following items:

POST CAPS: ACFIS, ACEIS, ACPR, or ACPE. Refer to Chapter 1 for options.

SIDE RAIL: VRR/DRH

LBWN8 Bracket. Brackets centred on posts.

POSTS: APS2 or APE2

TOUGHENED SAFETY GLASS PANELS. See table below.

BRACKET: AKS2

INSERT: AIA

MAXIMUM POST CENTRES 'S max' (metres)

ALWAYS TAKE THE LESSER OF THE VALUE BELOW AND THE VALUE FROM THE FIXING SPECIFICATION

HEIGHT(3)	POST TYPE(2)	EVA Toughened Laminated Glass Thickness	Line No.	LOADING CLASS(1)																		
				N07C/N07R								N03R	Not preventing falls									
				Design Wind Speed(4)									Design Wind Speed(4)									
				VH			EH						M			H			VH		EH	
				50	52	54	56	58	60	62	64	N/A	38	40	42	44	46	48	50	52	54	56
1.0	APS2	10	1	1.20	1.20	1.20	1.20	1.12	1.04	0.98	0.92	1.70	1.69	1.63	1.58	1.53	1.49	1.45	1.41	1.37	1.29	1.20
		12	2	1.20	1.20	1.20	1.20	1.12	1.04	0.98	0.92	1.71	2.03	1.96	1.90	1.84	1.78	1.63	1.50	1.39	1.29	1.20
	APE2	12	3	1.69	1.64	1.60	1.57	1.53	1.49	1.40	1.31	2.15	2.03	1.96	1.90	1.84	1.79	1.74	1.69	1.64	1.60	1.57
1.1	APS2	10	4	1.06	1.06	1.03	0.96	0.89	0.83	0.78	0.73	1.70	1.75	1.69	1.64	1.55	1.42	1.30	1.20	1.11	1.03	0.96
		12	5	1.06	1.06	1.03	0.96	0.89	0.83	0.78	0.73	1.71	2.08	1.88	1.70	1.55	1.42	1.30	1.20	1.11	1.03	0.96
	APE2	12	6	1.52	1.52	1.48	1.37	1.28	1.20	1.12	1.05	1.89	2.10	2.03	1.96	1.90	1.85	1.80	1.72	1.59	1.48	1.37
1.2	APS2	10	7	0.94	0.90	0.84	0.78	0.73	0.68	0.68	0.68	1.70	1.69	1.53	1.38	1.26	1.15	1.06	0.98	0.90	0.84	0.78
		12	8	0.94	0.90	0.84	0.78	0.73	0.68	0.68	0.68	1.71	1.69	1.53	1.38	1.26	1.15	1.06	0.98	0.90	0.84	0.78
	APE2	12	9	1.35	1.30	1.20	1.12	1.04	0.98	0.91	0.86	1.71	2.17	2.09	1.99	1.81	1.66	1.52	1.41	1.30	1.20	1.12

1. LOADING CLASS: Refer to Page 142 of this Manual for the scope of the Loading Class designations.
2. POST TYPES: Refer to Chapter 1 for details.
3. HEIGHT 'H': is the overall height of the balustrade above the substrate level shown. Interpolate for Heights between those shown.
4. DESIGN WIND SPEED: in m/s, Refer to Pages 47 to 48 for details of applicable wind codes and the methods for determining the Design Wind Speed.

'VETRO' (VRT SIDE RAIL)

This specification details the members to be used, glass thicknesses required and the maximum spacing for the various posts for this style. A separate specification must be referred to for fixing to the substrate (refer to Chapter 3). Post spacing must not exceed the lesser of the spacing from both Chapter 2 and Chapter 3. NOTE: For the Vetro Style we recommend always using 4 Substrate fixings per baseplate to give lateral stability to the post, even if 2 fixings is structurally adequate. Refer to Page 50 for notes on balustrade deflection.

1. Glass shall be GRADE A TOUGHENED SAFETY GLASS suitable for exterior applications in accordance with AS/NZS 2208, with a minimum thickness as determined from the Table below. Glass shall be supported and glazed in accordance with NZS 4223. All exposed edges to be Flat Polished.
2. Fabrication and Installation to be in accordance with Assembly Specification AS.35.04S on Page 100, the Installation Guides in Chapter 5, and all other relevant portions of the UNEX Fabricators Manual.
3. Side Rail height shall not be less than the minimum barrier height, as required in F4/AS1.
4. The balustrade shall be constructed such that the geometry of the balustrade shall comply with Acceptable Solutions F4/AS1. This includes the following (but not limited to): The minimum barrier height requirement, the maximum gap allowable and the avoidance of non-complying toeholds.

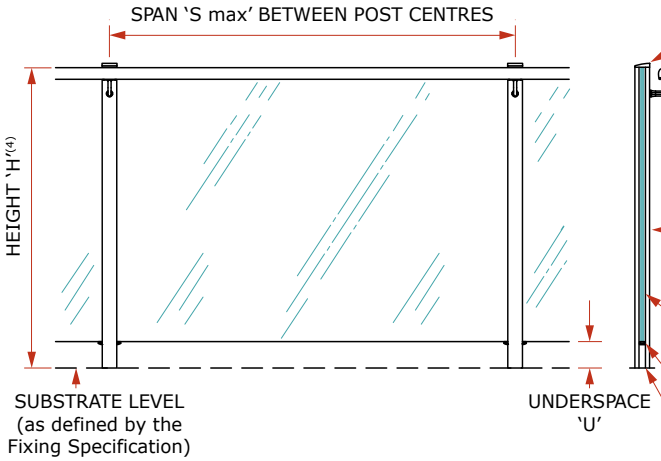

The balustrade shall be fabricated from the following items:

POST CAPS: ACFIS, ACEIS, ACPR, or ACPE. Refer to Chapter 1 for options.

SIDE RAIL: VRT/DZT3

LBWN8 Bracket. Brackets centred on posts.

POSTS: APS2 or APE2

TOUGHENED SAFETY GLASS PANELS. See table below.

BRACKET: AKS2

INSERT: AIA

MAXIMUM POST CENTRES 'S max' (metres)

ALWAYS TAKE THE LESSER OF THE VALUE BELOW AND THE VALUE FROM THE FIXING SPECIFICATION

HEIGHT(3)	POST TYPE(2)	Toughened Laminated Glass Thickness	Line No.	LOADING CLASS(1)																		
				N07C/N07R								N03R	Not preventing falls									
				Design Wind Speed(4)									Design Wind Speed(4)									
				VH			EH						M			H			VH		EH	
				50	52	54	56	58	60	62	64	N/A	38	40	42	44	46	48	50	52	54	56
1.0	APS2	10	1	1.20	1.20	1.20	1.20	1.12	1.04	0.98	0.92	1.70	1.69	1.63	1.58	1.53	1.49	1.45	1.41	1.37	1.29	1.20
		12	2	1.20	1.20	1.20	1.20	1.12	1.04	0.98	0.92	1.71	2.03	1.96	1.90	1.84	1.78	1.63	1.50	1.39	1.29	1.20
	APE2	12	3	1.69	1.64	1.60	1.57	1.53	1.49	1.40	1.31	2.15	2.03	1.96	1.90	1.84	1.79	1.74	1.69	1.64	1.60	1.57
1.1	APS2	10	4	1.06	1.06	1.03	0.96	0.89	0.83	0.78	0.73	1.70	1.75	1.69	1.64	1.55	1.42	1.30	1.20	1.11	1.03	0.96
		12	5	1.06	1.06	1.03	0.96	0.89	0.83	0.78	0.73	1.71	2.08	1.88	1.70	1.55	1.42	1.30	1.20	1.11	1.03	0.96
	APE2	12	6	1.52	1.52	1.48	1.37	1.28	1.20	1.12	1.05	1.89	2.10	2.03	1.96	1.90	1.85	1.80	1.72	1.59	1.48	1.37
1.2	APS2	10	7	0.94	0.90	0.84	0.78	0.73	0.68	0.68	0.68	1.70	1.69	1.53	1.38	1.26	1.15	1.06	0.98	0.90	0.84	0.78
		12	8	0.94	0.90	0.84	0.78	0.73	0.68	0.68	0.68	1.71	1.69	1.53	1.38	1.26	1.15	1.06	0.98	0.90	0.84	0.78
	APE2	12	9	1.35	1.30	1.20	1.12	1.04	0.98	0.91	0.86	1.71	2.17	2.09	1.99	1.81	1.66	1.52	1.41	1.30	1.20	1.12

1. LOADING CLASS: Refer to Page 142 of this Manual for the scope of the Loading Class designations.
2. POST TYPES: Refer to Chapter 1 for details.
3. HEIGHT 'H': is the overall height of the balustrade above the substrate level shown. Interpolate for Heights between those shown.
4. DESIGN WIND SPEED: in m/s, Refer to Pages 47 to 48 for details of applicable wind codes and the methods for determining the Design Wind Speed.

'VETRO' (LRR SIDE RAIL)

This specification details the members to be used, glass thicknesses required and the maximum spacing for the various posts for this style. A separate specification must be referred to for fixing to the substrate (refer to Chapter 3). Post spacing must not exceed the lesser of the spacing from both Chapter 2 and Chapter 3. NOTE: For the Vetro Style we recommend always using 4 Substrate fixings per baseplate to give lateral stability to the post, even if 2 fixings is structurally adequate. Refer to Page 50 for notes on balustrade deflection.

1. Glass shall be GRADE A TOUGHENED SAFETY GLASS suitable for exterior applications in accordance with AS/NZS 2208, with a minimum thickness as determined from the Table below. Glass shall be supported and glazed in accordance with NZS 4223. All exposed edges to be Flat Polished.
2. Fabrication and Installation to be in accordance with Assembly Specification AS.35.14S on Page 101, the Installation Guides in Chapter 5, and all other relevant portions of the UNEX Fabricators Manual.
3. Side Rail height shall not be less than the minimum barrier height, as required in F4/AS1.
4. The balustrade shall be constructed such that the geometry of the balustrade shall comply with Acceptable Solutions F4/AS1. This includes the following (but not limited to): The minimum barrier height requirement, the maximum gap allowable and the avoidance of non-complying toeholds.

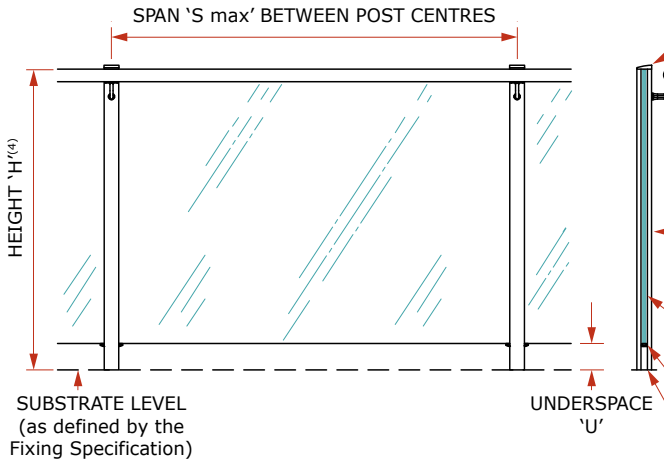

The balustrade shall be fabricated from the following items:

POST CAPS: ACFIS, ACEIS, ACPR, or ACPE. Refer to Chapter 1 for options.

SIDE RAIL: LRR

LRWN8 Bracket. Brackets centred on posts.

POSTS: APS2 or APE2

TOUGHENED SAFETY GLASS PANELS. See table below.

BRACKET: AKS2

INSERT: AIA

MAXIMUM POST CENTRES 'S max' (metres)

ALWAYS TAKE THE LESSER OF THE VALUE BELOW AND THE VALUE FROM THE FIXING SPECIFICATION

HEIGHT(3)	POST TYPE(2)	EVA Toughened Laminated Glass Thickness	Line No.	LOADING CLASS(1)																		
				N07C/N07R								N03R	Not preventing falls									
				Design Wind Speed(4)									Design Wind Speed(4)									
				VH			EH						M			H			VH			EH
				50	52	54	56	58	60	62	64	N/A	38	40	42	44	46	48	50	52	54	56
1.0	APS2	10	1	1.20	1.20	1.20	1.20	1.12	1.04	0.98	0.92	1.70	1.69	1.63	1.58	1.53	1.49	1.45	1.41	1.37	1.29	1.20
		12	2	1.20	1.20	1.20	1.20	1.12	1.04	0.98	0.92	1.71	2.03	1.96	1.90	1.84	1.78	1.63	1.50	1.39	1.29	1.20
	APE2	12	3	1.69	1.64	1.60	1.57	1.53	1.49	1.40	1.31	2.15	2.03	1.96	1.90	1.84	1.79	1.74	1.69	1.64	1.60	1.57
1.1	APS2	10	4	1.06	1.06	1.03	0.96	0.89	0.83	0.78	0.73	1.70	1.75	1.69	1.64	1.55	1.42	1.30	1.20	1.11	1.03	0.96
		12	5	1.06	1.06	1.03	0.96	0.89	0.83	0.78	0.73	1.71	2.08	1.88	1.70	1.55	1.42	1.30	1.20	1.11	1.03	0.96
	APE2	12	6	1.52	1.52	1.48	1.37	1.28	1.20	1.12	1.05	1.89	2.10	2.03	1.96	1.90	1.85	1.80	1.72	1.59	1.48	1.37
1.2	APS2	10	7	0.94	0.90	0.84	0.78	0.73	0.68	0.68	0.68	1.70	1.69	1.53	1.38	1.26	1.15	1.06	0.98	0.90	0.84	0.78
		12	8	0.94	0.90	0.84	0.78	0.73	0.68	0.68	0.68	1.71	1.69	1.53	1.38	1.26	1.15	1.06	0.98	0.90	0.84	0.78
	APE2	12	9	1.35	1.30	1.20	1.12	1.04	0.98	0.91	0.86	1.71	2.17	2.09	1.99	1.81	1.66	1.52	1.41	1.30	1.20	1.12

1. LOADING CLASS: Refer to Page 142 of this Manual for the scope of the Loading Class designations.
2. POST TYPES: Refer to Chapter 1 for details.
3. HEIGHT 'H': is the overall height of the balustrade above the substrate level shown. Interpolate for Heights between those shown.
4. DESIGN WIND SPEED: in m/s, Refer to Pages 47 to 48 for details of applicable wind codes and the methods for determining the Design Wind Speed.

'SURREAL' (NO RAIL)

This specification details the members to be used, glass thicknesses required and the maximum spacing for the various posts for this style. A separate specification must be referred to for fixing to the substrate (refer to Chapter 3). Post spacing must not exceed the lesser of the spacing from both Chapter 2 and Chapter 3. NOTE: For the Surreal Style we recommend always using 4 Substrate fixings per baseplate to give lateral stability to the post, even if 2 fixings is structurally adequate. Refer to Page 50 for notes on balustrade deflection.

1. Glass shall be **GRADE A TOUGHENED LAMINATED** SAFETY GLASS WITH SENTRYGLAS (SGP) INTERLAYER suitable for exterior applications in accordance with AS/NZS 2208, with a minimum thickness as determined from the Table below. INTERLAYER shall be 1.2mm thick. Glass shall be supported and glazed in accordance with NZS 4223. All exposed edges to be Flat Polished.
2. Fabrication and Installation to be in accordance with Assembly Specification AS.35.00 on Page 102, the Installation Guides in Chapter 5, and all other relevant portions of the UNEX Fabricators Manual.
3. APS2 and APE2 may be used for either "top fixed" or "side fixed".
4. **Both the vertical edges of the glass shall fully attach to the post with TASV60B structural silicone, for the full height and thickness of the glass, applied in accordance with manufacturers instructions.**
5. These style specifications are based on the top of the glass being 100mm above the top of the post. The top of the post shall be at the MINIMUM BARRIER HEIGHT in accordance with NZBC F4/AS1.
6. The balustrade shall be constructed such that the geometry of the balustrade shall comply with Acceptable Solutions F4/AS1. This includes the following (but not limited to): The minimum barrier height requirement, the maximum gap allowable and the avoidance of non-complying toeholds.

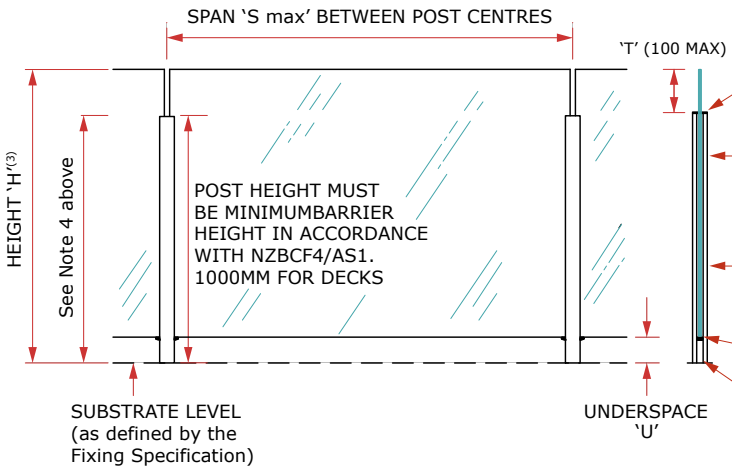

The balustrade shall be fabricated from the following items:

POST CAPS: ACFIS or ACEIS. Refer to Chapter 1 for options.

POSTS: APS2 or APE2.

TOUGHENED SAFETY GLASS PANELS. See table below.

BRACKET: AKS2

INSERT: AIA

MAXIMUM POST CENTRES 'S max' (metres)

ALWAYS TAKE THE LESSER OF THE VALUE BELOW AND THE VALUE FROM THE FIXING SPECIFICATION

HEIGHT(3)	POST TYPE(2)	SGP Toughened Laminated Glass Thickness	Line No.	LOADING CLASS(1)																		
				N07C/N07R								N03R	Not preventing falls									
				Design Wind Speed(4)									Design Wind Speed(4)									
				VH		EH							M			H			VH		EH	
				50	52	54	56	58	60	62	64	N/A	38	40	42	44	46	48	50	52	54	56
1.0	APS2	11.2	1	1.12	1.12	1.12	1.12	1.12	1.08	1.01	0.95	1.55	1.69	1.63	1.58	1.53	1.49	1.45	1.41	1.37	1.33	1.24
		13.2	2	1.12	1.12	1.12	1.12	1.12	1.08	1.01	0.95	1.71	2.03	1.96	1.90	1.84	1.79	1.68	1.55	1.44	1.33	1.24
	APE2	13.2	3	1.59	1.59	1.59	1.57	1.53	1.50	1.44	1.35	1.99	2.03	1.96	1.90	1.84	1.79	1.74	1.69	1.64	1.60	1.57
1.1	APS2	11.2	4	1.00	1.00	1.00	0.99	0.93	0.86	0.81	0.76	1.55	1.75	1.69	1.64	1.59	1.47	1.35	1.25	1.15	1.07	0.99
		13.2	5	1.00	1.00	1.00	0.99	0.93	0.86	0.81	0.76	1.71	2.10	1.95	1.76	1.61	1.47	1.35	1.25	1.15	1.07	0.99
	APE2	13.2	6	1.42	1.42	1.42	1.42	1.32	1.23	1.16	1.08	1.78	2.10	2.03	1.96	1.90	1.85	1.80	1.75	1.64	1.52	1.42
1.2	APS2	11.2	7	0.89	0.89	0.87	0.81	0.76	0.71	0.68	0.68	1.55	1.76	1.59	1.44	1.31	1.20	1.10	1.02	0.94	0.87	0.81
		13.2	8	0.89	0.89	0.87	0.81	0.76	0.71	0.68	0.68	1.71	1.76	1.59	1.44	1.31	1.20	1.10	1.02	0.94	0.87	0.81
	APE2	13.2	9	1.28	1.28	1.25	1.16	1.08	1.01	0.95	0.89	1.71	2.17	2.09	2.03	1.88	1.72	1.58	1.45	1.34	1.25	1.16

1. LOADING CLASS: Refer to Page 142 of this Manual for the scope of the Loading Class designations.
2. POST TYPES: Refer to Chapter 1 for details.
3. HEIGHT 'H': is the overall height of the balustrade above the substrate level shown. Interpolate for Heights between those shown.
4. DESIGN WIND SPEED: in m/s, Refer to Pages 47 to 48 for details of applicable wind codes and the methods for determining the Design Wind Speed.

'SURREAL' (ART SIDE RAIL)

This specification details the members to be used, glass thicknesses required and the maximum spacing for the various posts for this style. A separate specification must be referred to for fixing to the substrate (refer to Chapter 3). Post spacing must not exceed the lesser of the spacing from both Chapter 2 and Chapter 3. NOTE: For the Surreal Style we recommend always using 4 Substrate fixings per baseplate to give lateral stability to the post, even if 2 fixings is structurally adequate. Refer to Page 50 for notes on balustrade deflection.

1. Glass shall be GRADE A TOUGHENED SAFETY GLASS suitable for exterior applications in accordance with AS/NZS 2208, with a minimum thickness as determined from the Table below. Glass shall be supported and glazed in accordance with NZS 4223. All exposed edges to be Flat Polished.
2. Fabrication and Installation to be in accordance with Assembly Specification AS.36.05S on Page 103, the Installation Guides in Chapter 5, and all other relevant portions of the UNEX Fabricators Manual.
3. Side Rail height shall not be less than the minimum barrier height, as required in F4/AS1.
4. The balustrade shall be constructed such that the geometry of the balustrade shall comply with Acceptable Solutions F4/AS1. This includes the following (but not limited to): The minimum barrier height requirement, the maximum gap allowable and the avoidance of non-complying toeholds.

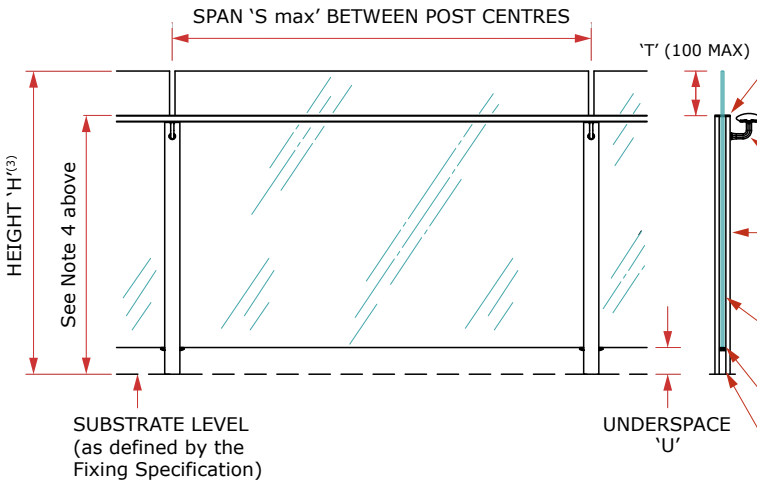

The balustrade shall be fabricated from the following items:

POST CAPS: ACFIS or ACEIS. Refer to Chapter 1 for options.

SIDE RAIL: ART/DRH

LBWN8 Bracket. Brackets centred on posts.

POSTS: APS2 or APE2

TOUGHENED SAFETY GLASS PANELS. See table below.

BRACKET: AKS2

INSERT: AIA

MAXIMUM POST CENTRES 'S max' (metres)

ALWAYS TAKE THE LESSER OF THE VALUE BELOW AND THE VALUE FROM THE FIXING SPECIFICATION

HEIGHT(3)	POST TYPE(2)	EVA Toughened Laminated Glass Thickness	Line No.	LOADING CLASS(1)																			
				N07C/N07R								N03R	Not preventing falls									
				Design Wind Speed(4)									Design Wind Speed(4)									
				VH			EH						M			H			VH			EH
				50	52	54	56	58	60	62	64	N/A	38	40	42	44	46	48	50	52	54	56
1.0	APS2	10	1	1.20	1.20	1.20	1.20	1.12	1.04	0.98	0.92	1.62	2.13	2.06	1.99	1.93	1.78	1.63	1.50	1.39	1.29	1.20
		12	2	1.20	1.20	1.20	1.20	1.12	1.04	0.98	0.92	1.62	2.55	2.35	2.13	1.94	1.78	1.63	1.50	1.39	1.29	1.20
	APE2	12	3	1.62	1.62	1.62	1.62	1.60	1.49	1.40	1.31	1.62	2.55	2.47	2.39	2.32	2.25	2.19	2.13	1.99	1.84	1.71
1.1	APS2	10	4	1.06	1.06	1.03	0.96	0.89	0.83	0.78	0.73	1.62	2.08	1.88	1.70	1.55	1.42	1.30	1.20	1.11	1.03	0.96
		12	5	1.06	1.06	1.03	0.96	0.89	0.83	0.78	0.73	1.62	2.08	1.88	1.70	1.55	1.42	1.30	1.20	1.11	1.03	0.96
	APE2	12	6	1.52	1.52	1.48	1.37	1.28	1.20	1.12	1.05	1.62	2.65	2.56	2.44	2.22	2.04	1.87	1.72	1.59	1.48	1.37
1.2	APS2	10	7	0.94	0.90	0.84	0.78	0.73	0.68	0.68	0.68	1.62	1.69	1.53	1.38	1.26	1.15	1.06	0.98	0.90	0.84	0.78
		12	8	0.94	0.90	0.84	0.78	0.73	0.68	0.68	0.68	1.62	1.69	1.53	1.38	1.26	1.15	1.06	0.98	0.90	0.84	0.78
	APE2	12	9	1.33	1.30	1.20	1.12	1.04	0.98	0.91	0.86	1.62	2.43	2.20	1.99	1.81	1.66	1.52	1.41	1.30	1.20	1.12

1. LOADING CLASS: Refer to Page 142 of this Manual for the scope of the Loading Class designations.
2. POST TYPES: Refer to Chapter 1 for details.
3. HEIGHT 'H': is the overall height of the balustrade above the substrate level shown. Interpolate for Heights between those shown.
4. DESIGN WIND SPEED: in m/s, Refer to Pages 47 to 48 for details of applicable wind codes and the methods for determining the Design Wind Speed.

'SURREAL'(PRR SIDE RAIL)

This specification details the members to be used, glass thicknesses required and the maximum spacing for the various posts for this style. A separate specification must be referred to for fixing to the substrate (refer to Chapter 3). Post spacing must not exceed the lesser of the spacing from both Chapter 2 and Chapter 3. NOTE: For the Surreal Style we recommend always using 4 Substrate fixings per baseplate to give lateral stability to the post, even if 2 fixings is structurally adequate. Refer to Page 50 for notes on balustrade deflection.

1. Glass shall be GRADE A TOUGHENED SAFETY GLASS suitable for exterior applications in accordance with AS/NZS 2208, with a minimum thickness as determined from the Table below. Glass shall be supported and glazed in accordance with NZS 4223. All exposed edges to be Flat Polished.
2. Fabrication and Installation to be in accordance with Assembly Specification AS.36.06S on Page 104, the Installation Guides in Chapter 5, and all other relevant portions of the UNEX Fabricators Manual.
3. Side Rail height shall not be less than the minimum barrier height, as required in F4/AS1.
4. The balustrade shall be constructed such that the geometry of the balustrade shall comply with Acceptable Solutions F4/AS1. This includes the following (but not limited to): The minimum barrier height requirement, the maximum gap allowable and the avoidance of non-complying toeholds.

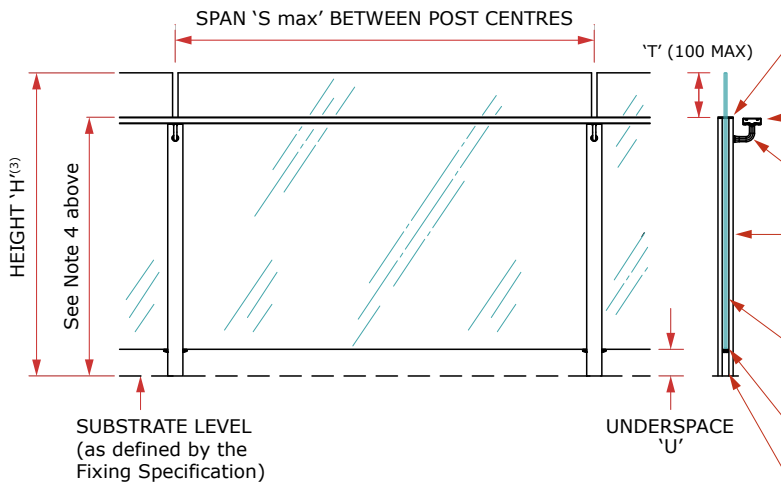

The balustrade shall be fabricated from the following items:

POST CAPS: ACFIS or ACEIS. Refer to Chapter 1 for options.

SIDE RAIL: PRR/DRH

LBWN8 Bracket. Brackets centred on posts.

POSTS: APS2 or APE2

TOUGHENED SAFETY GLASS PANELS. See table below.

BRACKET: AKS2

INSERT: AIA

MAXIMUM POST CENTRES 'S max' (metres)

ALWAYS TAKE THE LESSER OF THE VALUE BELOW AND THE VALUE FROM THE FIXING SPECIFICATION

HEIGHT(3)	POST TYPE(2)	EVA Toughened Laminated Glass Thickness	Line No.	LOADING CLASS(1)																			
				N07C/N07R								N03R	Not preventing falls										
				Design Wind Speed(4)									Design Wind Speed(4)										
				VH			EH						M			H			VH			EH	
				50	52	54	56	58	60	62	64	N/A	38	40	42	44	46	48	50	52	54	56
1.0	APS2	10	1	1.20	1.20	1.20	1.20	1.12	1.04	0.98	0.92	1.70	1.69	1.63	1.58	1.53	1.49	1.45	1.41	1.37	1.29	1.20
		12	2	1.20	1.20	1.20	1.20	1.12	1.04	0.98	0.92	1.71	2.03	1.96	1.90	1.84	1.78	1.63	1.50	1.39	1.29	1.20
	APE2	12	3	1.69	1.64	1.60	1.57	1.53	1.49	1.40	1.31	1.82	2.03	1.96	1.90	1.84	1.79	1.74	1.69	1.64	1.60	1.57
1.1	APS2	10	4	1.06	1.06	1.03	0.96	0.89	0.83	0.78	0.73	1.70	1.75	1.69	1.64	1.55	1.42	1.30	1.20	1.11	1.03	0.96
		12	5	1.06	1.06	1.03	0.96	0.89	0.83	0.78	0.73	1.71	2.08	1.88	1.70	1.55	1.42	1.30	1.20	1.11	1.03	0.96
	APE2	12	6	1.52	1.52	1.48	1.37	1.28	1.20	1.12	1.05	1.82	2.10	2.03	1.96	1.90	1.85	1.80	1.72	1.59	1.48	1.37
1.2	APS2	10	7	0.94	0.90	0.84	0.78	0.73	0.68	0.68	0.68	1.70	1.69	1.53	1.38	1.26	1.15	1.06	0.98	0.90	0.84	0.78
		12	8	0.94	0.90	0.84	0.78	0.73	0.68	0.68	0.68	1.71	1.69	1.53	1.38	1.26	1.15	1.06	0.98	0.90	0.84	0.78
	APE2	12	9	1.35	1.30	1.20	1.12	1.04	0.98	0.91	0.86	1.71	2.17	2.09	1.99	1.81	1.66	1.52	1.41	1.30	1.20	1.12

1. LOADING CLASS: Refer to Page 142 of this Manual for the scope of the Loading Class designations.
2. POST TYPES: Refer to Chapter 1 for details.
3. HEIGHT 'H': is the overall height of the balustrade above the substrate level shown. Interpolate for Heights between those shown.
4. DESIGN WIND SPEED: in m/s, Refer to Pages 47 to 48 for details of applicable wind codes and the methods for determining the Design Wind Speed.

'SURREAL' (VRE SIDE RAIL)

This specification details the members to be used, glass thicknesses required and the maximum spacing for the various posts for this style. A separate specification must be referred to for fixing to the substrate (refer to Chapter 3). Post spacing must not exceed the lesser of the spacing from both Chapter 2 and Chapter 3. NOTE: For the Surreal Style we recommend always using 4 Substrate fixings per baseplate to give lateral stability to the post, even if 2 fixings is structurally adequate. Refer to Page 50 for notes on balustrade deflection.

1. Glass shall be GRADE A TOUGHENED SAFETY GLASS suitable for exterior applications in accordance with AS/NZS 2208, with a minimum thickness as determined from the Table below. Glass shall be supported and glazed in accordance with NZS 4223. All exposed edges to be Flat Polished.
2. Fabrication and Installation to be in accordance with Assembly Specification AS.36.08S on Page 105, the Installation Guides in Chapter 5, and all other relevant portions of the UNEX Fabricators Manual.
3. Side Rail height shall not be less than the minimum barrier height, as required in F4/AS1.
4. The balustrade shall be constructed such that the geometry of the balustrade shall comply with Acceptable Solutions F4/AS1. This includes the following (but not limited to): The minimum barrier height requirement, the maximum gap allowable and the avoidance of non-complying toeholds.

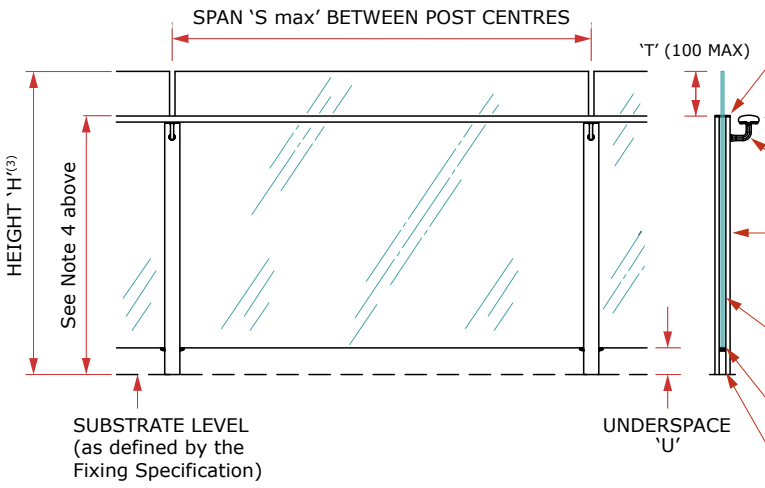

The balustrade shall be fabricated from the following items:

POST CAPS: ACFIS or ACEIS. Refer to Chapter 1 for options.

SIDE RAIL: VRE/DRH

LBWN8 Bracket. Brackets centred on posts.

POSTS: APS2 or APE2

TOUGHENED SAFETY GLASS PANELS. See table below.

BRACKET: AKS2

INSERT: AIA

MAXIMUM POST CENTRES 'S max' (metres)

ALWAYS TAKE THE LESSER OF THE VALUE BELOW AND THE VALUE FROM THE FIXING SPECIFICATION

HEIGHT(3)	POST TYPE(2)	EVA Toughened Laminated Glass Thickness	Line No.	LOADING CLASS(1)																			
				N07C/N07R								N03R	Not preventing falls									
				Design Wind Speed(4)									Design Wind Speed(4)									
				VH			EH						M			H			VH			EH
				50	52	54	56	58	60	62	64	N/A	38	40	42	44	46	48	50	52	54	56
1.0	APS2	10	1	1.17	1.17	1.17	1.17	1.12	1.04	0.98	0.92	1.17	1.69	1.63	1.58	1.53	1.49	1.45	1.41	1.37	1.29	1.20
		12	2	1.17	1.17	1.17	1.17	1.12	1.04	0.98	0.92	1.17	2.03	1.96	1.90	1.84	1.78	1.63	1.50	1.39	1.29	1.20
	APE2	12	3	1.17	1.17	1.17	1.17	1.17	1.17	1.17	1.17	1.17	2.03	1.96	1.90	1.84	1.79	1.74	1.69	1.64	1.60	1.57
1.1	APS2	10	4	1.06	1.06	1.03	0.96	0.89	0.83	0.78	0.73	1.17	1.75	1.69	1.64	1.55	1.42	1.30	1.20	1.11	1.03	0.96
		12	5	1.06	1.06	1.03	0.96	0.89	0.83	0.78	0.73	1.17	2.08	1.88	1.70	1.55	1.42	1.30	1.20	1.11	1.03	0.96
	APE2	12	6	1.17	1.17	1.17	1.17	1.17	1.17	1.12	1.05	1.17	2.10	2.03	1.96	1.90	1.85	1.80	1.72	1.59	1.48	1.37
1.2	APS2	10	7	0.94	0.90	0.84	0.78	0.73	0.68	0.68	0.68	1.17	1.69	1.53	1.38	1.26	1.15	1.06	0.98	0.90	0.84	0.78
		12	8	0.94	0.90	0.84	0.78	0.73	0.68	0.68	0.68	1.17	1.69	1.53	1.38	1.26	1.15	1.06	0.98	0.90	0.84	0.78
	APE2	12	9	1.17	1.17	1.17	1.12	1.04	0.98	0.91	0.86	1.17	2.17	2.09	1.99	1.81	1.66	1.52	1.41	1.30	1.20	1.12

1. LOADING CLASS: Refer to Page 142 of this Manual for the scope of the Loading Class designations.
2. POST TYPES: Refer to Chapter 1 for details.
3. HEIGHT 'H': is the overall height of the balustrade above the substrate level shown. Interpolate for Heights between those shown.
4. DESIGN WIND SPEED: in m/s, Refer to Pages 47 to 48 for details of applicable wind codes and the methods for determining the Design Wind Speed.

'SURREAL'(VRR SIDE RAIL)

This specification details the members to be used, glass thicknesses required and the maximum spacing for the various posts for this style. A separate specification must be referred to for fixing to the substrate (refer to Chapter 3). Post spacing must not exceed the lesser of the spacing from both Chapter 2 and Chapter 3. NOTE: For the Surreal Style we recommend always using 4 Substrate fixings per baseplate to give lateral stability to the post, even if 2 fixings is structurally adequate. Refer to Page 50 for notes on balustrade deflection.

1. Glass shall be GRADE A TOUGHENED SAFETY GLASS suitable for exterior applications in accordance with AS/NZS 2208, with a minimum thickness as determined from the Table below. Glass shall be supported and glazed in accordance with NZS 4223. All exposed edges to be Flat Polished.
2. Fabrication and Installation to be in accordance with Assembly Specification AS.36.12S on Page 106, the Installation Guides in Chapter 5, and all other relevant portions of the UNEX Fabricators Manual.
3. Side Rail height shall not be less than the minimum barrier height, as required in F4/AS1.
4. The balustrade shall be constructed such that the geometry of the balustrade shall comply with Acceptable Solutions F4/AS1. This includes the following (but not limited to): The minimum barrier height requirement, the maximum gap allowable and the avoidance of non-complying toeholds.

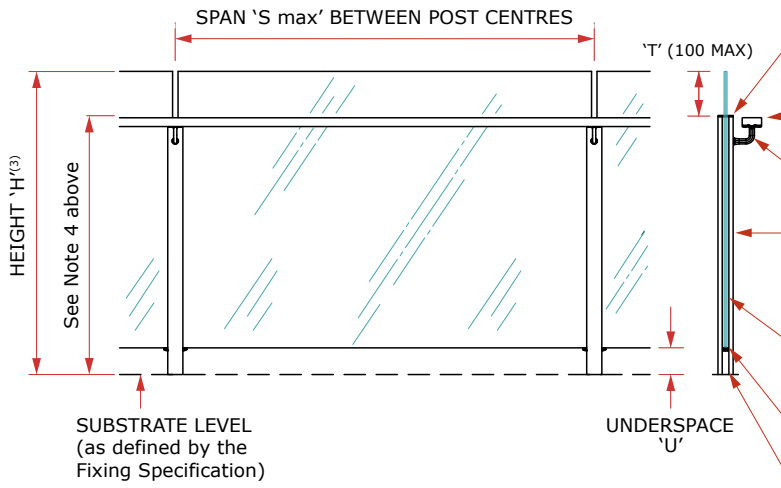

The balustrade shall be fabricated from the following items:

POST CAPS: ACFIS or ACEIS. Refer to Chapter 1 for options.

SIDE RAIL: VRR/DRH

LBWN8 Bracket. Brackets centred on posts.

POSTS: APS2 or APE2

TOUGHENED SAFETY GLASS PANELS. See table below.

BRACKET: AKS2

INSERT: AIA

MAXIMUM POST CENTRES 'S max' (metres)

ALWAYS TAKE THE LESSER OF THE VALUE BELOW AND THE VALUE FROM THE FIXING SPECIFICATION

HEIGHT(3)	POST TYPE(2)	EVA Toughened Laminated Glass Thickness	Line No.	LOADING CLASS(1)																			
				N07C/N07R								N03R	Not preventing falls										
				Design Wind Speed(4)									Design Wind Speed(4)										
				VH			EH						M			H			VH			EH	
				50	52	54	56	58	60	62	64	N/A	38	40	42	44	46	48	50	52	54	56
1.0	APS2	10	1	1.20	1.20	1.20	1.20	1.12	1.04	0.98	0.92	1.70	1.69	1.63	1.58	1.53	1.49	1.45	1.41	1.37	1.29	1.20
		12	2	1.20	1.20	1.20	1.20	1.12	1.04	0.98	0.92	1.71	2.03	1.96	1.90	1.84	1.78	1.63	1.50	1.39	1.29	1.20
	APE2	12	3	1.69	1.64	1.60	1.57	1.53	1.49	1.40	1.31	2.15	2.03	1.96	1.90	1.84	1.79	1.74	1.69	1.64	1.60	1.57
1.1	APS2	10	4	1.06	1.06	1.03	0.96	0.89	0.83	0.78	0.73	1.70	1.75	1.69	1.64	1.55	1.42	1.30	1.20	1.11	1.03	0.96
		12	5	1.06	1.06	1.03	0.96	0.89	0.83	0.78	0.73	1.71	2.08	1.88	1.70	1.55	1.42	1.30	1.20	1.11	1.03	0.96
	APE2	12	6	1.52	1.52	1.48	1.37	1.28	1.20	1.12	1.05	1.89	2.10	2.03	1.96	1.90	1.85	1.80	1.72	1.59	1.48	1.37
1.2	APS2	10	7	0.94	0.90	0.84	0.78	0.73	0.68	0.68	0.68	1.70	1.69	1.53	1.38	1.26	1.15	1.06	0.98	0.90	0.84	0.78
		12	8	0.94	0.90	0.84	0.78	0.73	0.68	0.68	0.68	1.71	1.69	1.53	1.38	1.26	1.15	1.06	0.98	0.90	0.84	0.78
	APE2	12	9	1.35	1.30	1.20	1.12	1.04	0.98	0.91	0.86	1.71	2.17	2.09	1.99	1.81	1.66	1.52	1.41	1.30	1.20	1.12

1. LOADING CLASS: Refer to Page 142 of this Manual for the scope of the Loading Class designations.
2. POST TYPES: Refer to Chapter 1 for details.
3. HEIGHT 'H': is the overall height of the balustrade above the substrate level shown. Interpolate for Heights between those shown.
4. DESIGN WIND SPEED: in m/s, Refer to Pages 47 to 48 for details of applicable wind codes and the methods for determining the Design Wind Speed.

'SURREAL' (VRT SIDE RAIL)

This specification details the members to be used, glass thicknesses required and the maximum spacing for the various posts for this style. A separate specification must be referred to for fixing to the substrate (refer to Chapter 3). Post spacing must not exceed the lesser of the spacing from both Chapter 2 and Chapter 3. NOTE: For the Surreal Style we recommend always using 4 Substrate fixings per baseplate to give lateral stability to the post, even if 2 fixings is structurally adequate. Refer to Page 50 for notes on balustrade deflection.

1. Glass shall be GRADE A TOUGHENED SAFETY GLASS suitable for exterior applications in accordance with AS/NZS 2208, with a minimum thickness as determined from the Table below. Glass shall be supported and glazed in accordance with NZS 4223. All exposed edges to be Flat Polished.
2. Fabrication and Installation to be in accordance with Assembly Specification AS.36.04S on Page 107, the Installation Guides in Chapter 5, and all other relevant portions of the UNEX Fabricators Manual.
3. Side Rail height shall not be less than the minimum barrier height, as required in F4/AS1.
4. The balustrade shall be constructed such that the geometry of the balustrade shall comply with Acceptable Solutions F4/AS1. This includes the following (but not limited to): The minimum barrier height requirement, the maximum gap allowable and the avoidance of non-complying toeholds.

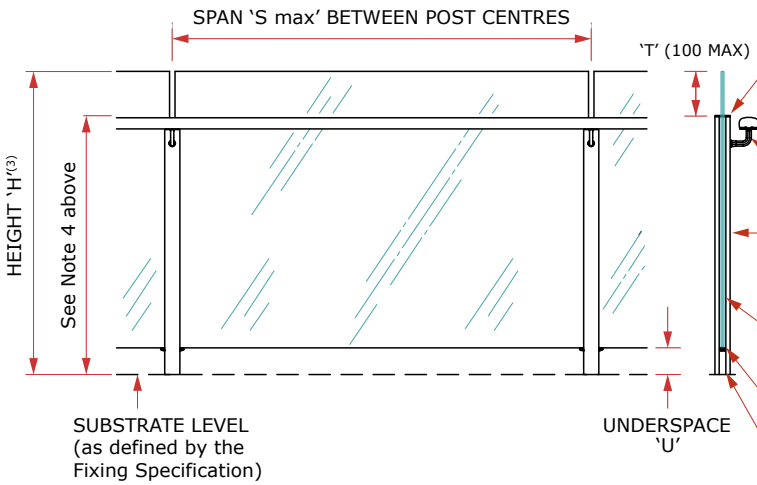

The balustrade shall be fabricated from the following items:

POST CAPS: ACFIS or ACEIS. Refer to Chapter 1 for options.

SIDE RAIL: VRT/DZT3

LBWN8 Bracket. Brackets centred on posts.

POSTS: APS2 or APE2

TOUGHENED SAFETY GLASS PANELS. See table below.

BRACKET: AKS2

INSERT: AIA

MAXIMUM POST CENTRES 'S max' (metres)

ALWAYS TAKE THE LESSER OF THE VALUE BELOW AND THE VALUE FROM THE FIXING SPECIFICATION

HEIGHT(3)	POST TYPE(2)	EVA Toughened Laminated Glass Thickness	Line No.	LOADING CLASS(1)																			
				N07C/N07R								N03R	Not preventing falls									
				Design Wind Speed(4)									Design Wind Speed(4)									
				VH			EH						M			H			VH			EH
				50	52	54	56	58	60	62	64	N/A	38	40	42	44	46	48	50	52	54	56
1.0	APS2	10	1	1.20	1.20	1.20	1.20	1.12	1.04	0.98	0.92	1.70	1.69	1.63	1.58	1.53	1.49	1.45	1.41	1.37	1.29	1.20
		12	2	1.20	1.20	1.20	1.20	1.12	1.04	0.98	0.92	1.71	2.03	1.96	1.90	1.84	1.78	1.63	1.50	1.39	1.29	1.20
	APE2	12	3	1.69	1.64	1.60	1.57	1.53	1.49	1.40	1.31	2.15	2.03	1.96	1.90	1.84	1.79	1.74	1.69	1.64	1.60	1.57
1.1	APS2	10	4	1.06	1.06	1.03	0.96	0.89	0.83	0.78	0.73	1.70	1.75	1.69	1.64	1.55	1.42	1.30	1.20	1.11	1.03	0.96
		12	5	1.06	1.06	1.03	0.96	0.89	0.83	0.78	0.73	1.71	2.08	1.88	1.70	1.55	1.42	1.30	1.20	1.11	1.03	0.96
	APE2	12	6	1.52	1.52	1.48	1.37	1.28	1.20	1.12	1.05	1.89	2.10	2.03	1.96	1.90	1.85	1.80	1.72	1.59	1.48	1.37
1.2	APS2	10	7	0.94	0.90	0.84	0.78	0.73	0.68	0.68	0.68	1.70	1.69	1.53	1.38	1.26	1.15	1.06	0.98	0.90	0.84	0.78
		12	8	0.94	0.90	0.84	0.78	0.73	0.68	0.68	0.68	1.71	1.69	1.53	1.38	1.26	1.15	1.06	0.98	0.90	0.84	0.78
	APE2	12	9	1.35	1.30	1.20	1.12	1.04	0.98	0.91	0.86	1.71	2.17	2.09	1.99	1.81	1.66	1.52	1.41	1.30	1.20	1.12

1. LOADING CLASS: Refer to Page 142 of this Manual for the scope of the Loading Class designations.
2. POST TYPES: Refer to Chapter 1 for details.
3. HEIGHT 'H': is the overall height of the balustrade above the substrate level shown. Interpolate for Heights between those shown.
4. DESIGN WIND SPEED: in m/s, Refer to Pages 47 to 48 for details of applicable wind codes and the methods for determining the Design Wind Speed.

'SURREAL'(LRR SIDE RAIL)

This specification details the members to be used, glass thicknesses required and the maximum spacing for the various posts for this style. A separate specification must be referred to for fixing to the substrate (refer to Chapter 3). Post spacing must not exceed the lesser of the spacing from both Chapter 2 and Chapter 3. NOTE: For the Surreal Style we recommend always using 4 Substrate fixings per baseplate to give lateral stability to the post, even if 2 fixings is structurally adequate. Refer to Page 50 for notes on balustrade deflection.

1. Glass shall be GRADE A TOUGHENED SAFETY GLASS suitable for exterior applications in accordance with AS/NZS 2208, with a minimum thickness as determined from the Table below. Glass shall be supported and glazed in accordance with NZS 4223. All exposed edges to be Flat Polished.
2. Fabrication and Installation to be in accordance with Assembly Specification AS.36.14S on Page 108, the Installation Guides in Chapter 5, and all other relevant portions of the UNEX Fabricators Manual.
3. Side Rail height shall not be less than the minimum barrier height, as required in F4/AS1.
4. The balustrade shall be constructed such that the geometry of the balustrade shall comply with Acceptable Solutions F4/AS1. This includes the following (but not limited to): The minimum barrier height requirement, the maximum gap allowable and the avoidance of non-complying toeholds.

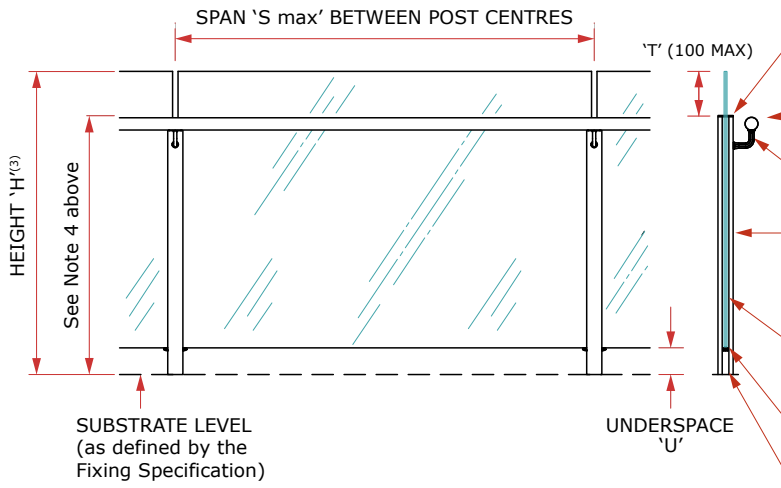

The balustrade shall be fabricated from the following items:

POST CAPS: ACFIS or ACEIS. Refer to Chapter 1 for options.

SIDE RAIL: LRR

LRWN8 Bracket. Brackets centred on posts.

POSTS: APS2 or APE2

TOUGHENED SAFETY GLASS PANELS. See table below.

BRACKET: AKS2

INSERT: AIA

MAXIMUM POST CENTRES 'S max' (metres)

ALWAYS TAKE THE LESSER OF THE VALUE BELOW AND THE VALUE FROM THE FIXING SPECIFICATION

HEIGHT(3)	POST TYPE(2)	EVA Toughened Laminated Glass Thickness	Line No.	LOADING CLASS(1)																			
				N07C/N07R								N03R	Not preventing falls										
				Design Wind Speed(4)									Design Wind Speed(4)										
				VH			EH						M			H			VH			EH	
				50	52	54	56	58	60	62	64	N/A	38	40	42	44	46	48	50	52	54	56
1.0	APS2	10	1	1.20	1.20	1.20	1.20	1.12	1.04	0.98	0.92	1.70	1.69	1.63	1.58	1.53	1.49	1.45	1.41	1.37	1.29	1.20
		12	2	1.20	1.20	1.20	1.20	1.12	1.04	0.98	0.92	1.71	2.03	1.96	1.90	1.84	1.78	1.63	1.50	1.39	1.29	1.20
	APE2	12	3	1.69	1.64	1.60	1.57	1.53	1.49	1.40	1.31	2.15	2.03	1.96	1.90	1.84	1.79	1.74	1.69	1.64	1.60	1.57
1.1	APS2	10	4	1.06	1.06	1.03	0.96	0.89	0.83	0.78	0.73	1.70	1.75	1.69	1.64	1.55	1.42	1.30	1.20	1.11	1.03	0.96
		12	5	1.06	1.06	1.03	0.96	0.89	0.83	0.78	0.73	1.71	2.08	1.88	1.70	1.55	1.42	1.30	1.20	1.11	1.03	0.96
	APE2	12	6	1.52	1.52	1.48	1.37	1.28	1.20	1.12	1.05	1.89	2.10	2.03	1.96	1.90	1.85	1.80	1.72	1.59	1.48	1.37
1.2	APS2	10	7	0.94	0.90	0.84	0.78	0.73	0.68	0.68	0.68	1.70	1.69	1.53	1.38	1.26	1.15	1.06	0.98	0.90	0.84	0.78
		12	8	0.94	0.90	0.84	0.78	0.73	0.68	0.68	0.68	1.71	1.69	1.53	1.38	1.26	1.15	1.06	0.98	0.90	0.84	0.78
	APE2	12	9	1.35	1.30	1.20	1.12	1.04	0.98	0.91	0.86	1.71	2.17	2.09	1.99	1.81	1.66	1.52	1.41	1.30	1.20	1.12

1. LOADING CLASS: Refer to Page 142 of this Manual for the scope of the Loading Class designations.
2. POST TYPES: Refer to Chapter 1 for details.
3. HEIGHT 'H': is the overall height of the balustrade above the substrate level shown. Interpolate for Heights between those shown.
4. DESIGN WIND SPEED: in m/s, Refer to Pages 47 to 48 for details of applicable wind codes and the methods for determining the Design Wind Speed.

CHAPTER 4 - SEMI-FRAMELESS GLASS FIXING SPECIFICATIONS

General Notes for Fixing to Timber Substrates pg66-67
Construction Details for Top mounting to Timber Substrates pg68
Construction Details for Side mounting to Timber Substrates pg69

SPEC ID	**FIXING METHOD**	
FS.1T.01.00	Dry Timber, Top Fixing, 65mm CRS	pg70
FS.1T.02.00	Dry Timber, Top Fixing, 90mm CRS	pg71
FS.1S.04.03	Dry Timber, Side Fixing, Screws, 90mm Edge Joist	pg72
FS.1S.06.03	Dry Timber, Side Fixing, Bolts	pg73
FS.1S.07.03	Dry Timber, DKG2 Fixing, Screws, 90mm Edge Joist	pg74
FS.2T.01.00	Wet Timber, Top Fixing, 65mm CRS	pg75
FS.2T.02.00	Wet Timber, Top Fixing, 90mm CRS	pg76
FS.2S.04.03	Wet Timber, Side Fixing, Screws, 90mm Edge Joist	pg77
FS.2S.05.03	Wet Timber, Side Fixing, Screws, 135mm Edge Joist	pg78
FS.2S.06.03	Wet Timber, Side Fixing, Bolts	pg79

General Notes for Fixing to Concrete and Masonry Substrates pg80-81

FS.3T.01.00	Concrete, Top Fixing, Epoxy-Set Anchors, 65mm CRS	pg82
FS.3T.02.00	Concrete, Top Fixing, Epoxy-Set Anchors, 90mm CRS	pg83
FS.3S.19.03	Concrete, Side Fixing, Epoxy-Set Anchors	pg84
FS.3S.07.03	Concrete, DKG2 Fixing, Epoxy-Set Anchors	pg85
FS.3T.12.03	Concrete, Post Built into	pg86
FS.4T.01.00	Masonry Top Fixing, Epoxy-Set Anchors, 65mm CRS	pg87
FS.4T.02.00	Masonry Top Fixing, Epoxy-Set Anchors, 90mm CRS	pg88
FS.4S.19.03	Masonry, Side Fixing, Epoxy-Set Anchors	pg89
FS.5T.00.00_75	Steel, Top Fixing, Inline Bolts	pg90
FS.5T.00.00_90	Steel, Top Fixing, Inline Bolts	pg91
FS.5T.01.00	Steel, Top Fixing, Bolts, 65mm CRS	pg92
FS.5S.06.03	Steel, Side Fixing, Bolts	pg93

GENERAL NOTES FOR FIXING TO TIMBER SUBSTRATES

The following notes refer to construction details for Top Fixing and Side Fixing channel systems to timber structures.

1. GENERAL

Tables in Chapter 2 (Style Specifications) gives the glass type, thickness and the maximum clamp assembly centres permitted, with or without a Top Rail, as a system. (Except for the Arena-Points refer to the tables in the Chapter 3 Fixing Specification pages).

Fixing Specifications in Chapter 3 indicate the fixing type and quantity of substrate fasteners within each clamp assembly unit. The clamp assembly unit centres are determined by the Style Specifications.

2. LOADING CLASS

Refer to page 180 for a description of the various Loading Class designations.

3. APPROVED FASTENERS

All fasteners shall be manufactured from 316 stainless steel and be supplied by UNEX.

Coach screws shall be manufactured to DIN 571 and are identified in the tables by their part number. e.g. FCP8-165 : FC = Coach screw stainless steel ; 8 = 8mm diameter ; 165 = length in mm.

Bolts shall be Class 70 stainless steel and be fitted with stainless steel nyloc nuts and washers. Alternatively use 316 S/S threaded rods with nuts and washers. Use S/S dome nuts in lieu of standard nut heads where visible. All washers must be 50mm square stainless steel when bearing against timber structures.

4. HEIGHT

Height 'H' is the overall height of the balustrade above the substrate level shown. Interpolate for heights between those shown.

5. DESIGN WIND SPEED

Design Wind Speeds are ultimate limit state wind speeds. Guidance on how this may be determined for any site is given on pages 47-48. M, H, VH, and EH indicate Medium, High, Very High, and Extremely High Wind Zones from NZS 3604:2011. Interpolate between wind speeds shown. For Loading Class N07C/N07R and N03R refer to AS/NZS 1170 for determining Wind Speeds.

6. BASEPLATES

Baseplates shall be attached to the posts as per Page 156 and fixed to structural timber framing as illustrated.

6. FABRICATION AND INSTALLATION

Fabrication and Installation are to be in accordance with Section 5 of this Manual and where applicable, comply with the relevant requirements of the NZ Building Code.

7. SUBSTRATE DESIGN

Substrate Design including waterproofing and structural design of the timber members and their connections is beyond the scope of these specifications and must be carried out by others. Structural timber shall have a minimum thickness of 45mm.

8. TIMBER

Screw strength is based on structural timber being Pinus Radiata VSG8 or MSG8, or higher.

DRY TIMBER is timber with a maximum in-service moisture content of 18%.

WET TIMBER is timber where the in-service moisture content could be greater than 18% eg. exposed decks.

9. INSERTING COACH SCREWS

For 8mm and 10mm coach screws, pre-drill the entire screw embedment to the following diameters.

(continued on following Page)

GENERAL NOTES FOR FIXING TO TIMBER SUBSTRATES - (CONT'D)

5.5mm diameter for 8mm coach screws. (TDT5.5 Drill bits available from UNEX).

8mm diameter for 10mm coach screws. (TDT8.0 Drill bits available from UNEX).

Where the unthreaded shaft of the screw will penetrate the structural timber, it will also be necessary to predrill the depth of the hole that will be occupied by the unthreaded shank to the nominal shank diameter taking great care not to extend this drilling into the threaded portion.

In some situations, the screws may penetrate beyond the structural timber. Check for suitability.

10. DURABILITY

Instructions relating to durability issues outlined on Pages 126-127 of this manual must be carried out in conjunction with these Fixing Specifications. These instructions cover a number of areas including; post drainage slots and separation of the aluminium from the stainless steel fasteners and/or the substrate. Detailed instructions are given throughout this manual, particularly in Chapter 5.

11. PACKING CAVITIES

For side fixed posts or channels, the full area between the post or channel and the supporting substrate must be packed solid with No 1 Pinus Radiata or material having an equivalent bearing strength.

12. DEFLECTION

Please note that some of the following fixing specifications may exceed the non-mandatory recommended balustrade deflection guide, refer to page 40 for more information.

13. SUBSTRATE FASTENER BONDING

Where required all substrate coach screws, must have fully engaged threads to structural wet timber and be embedded with **"Sika Supergrip 2 Hour"** Adhesive. The adhesive is available from UNEX code: #TASG and must not be substituted with other adhesives. Insert some adhesive into the pre-drilled hole and liberally apply to the coach screws before insertion. Ensure you always follow all the manufacturers safety procedures and usage instructions.

CONSTRUCTION DETAILS FOR TOP MOUNTING TO TIMBER SUBSTRATES

NOTES:

1. Timer decks must be nogged at framing stage to suit post fixing requirements.
2. Where post spacing is known at framing stage, mark post centres on edge joists and add additional nogs as shown.
3. Where posts spacing is not known at framing stage, provide extra continuous nog right around the deck.
4. Edge joists and nogs to be at 90 mm centres.
5. Structural fixing details of nogs, joists, end joists and dummy joists to be determined by deck design engineer.

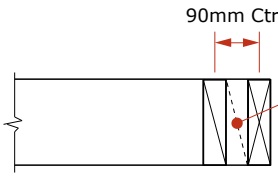

NOG SPACING
N.B. - Nogs to be same size timber as joists

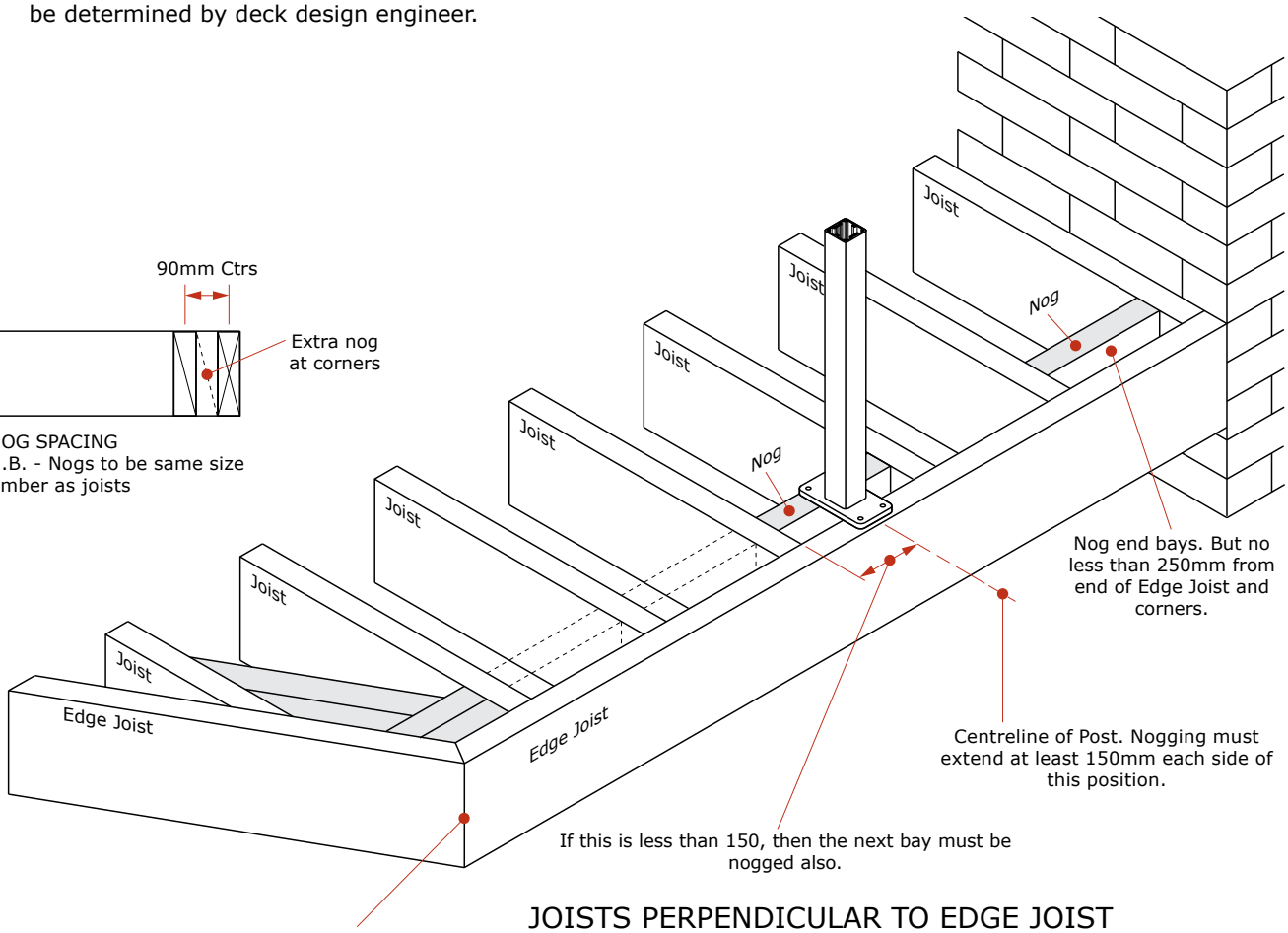

JOISTS PERPENDICULAR TO EDGE JOIST

For non-90º corners, solid nog each way parallel to edge joists as shown above:
For 90º corners, solid nog as shown below:

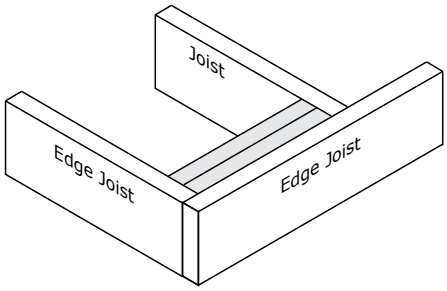

NOGS FOR 90º CORNER

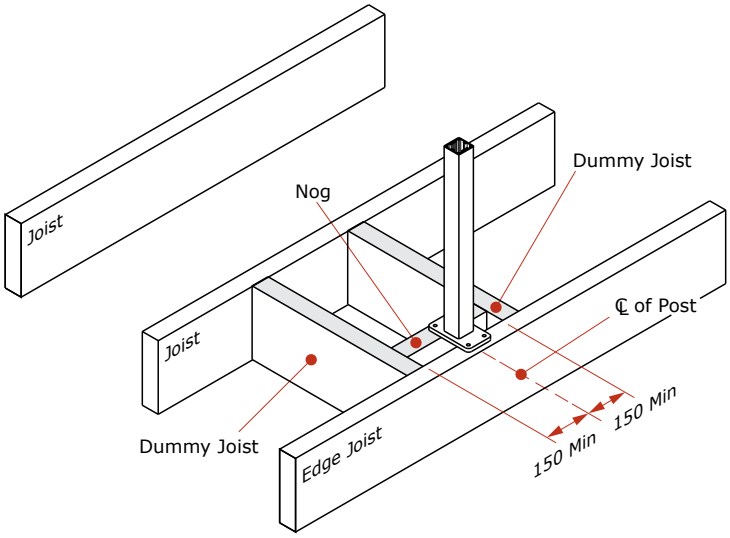

JOISTS PARALLEL TO EDGE JOIST

CONSTRUCTION DETAILS FOR SIDE MOUNTING TO TIMBER SUBSTRATES

NOTES:

1. Timber decks must be nogged at framing stage for the post fixing requirements.
2. Provide an extra continuous Edge Joist right around the deck edge as shown.
3. Where edge joists are parallel to the main joists, provide dummy joists at 400 centres maximum as shown.
4. Structural fixing details of nogs, joists, end joists and dummy joists to be determined by deck design engineer.
5. All edge joists and nogs to be treated H3.

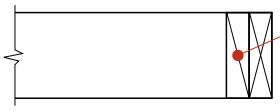

NOG POSITION
N.B. - Nogs to be same size
timber as joists

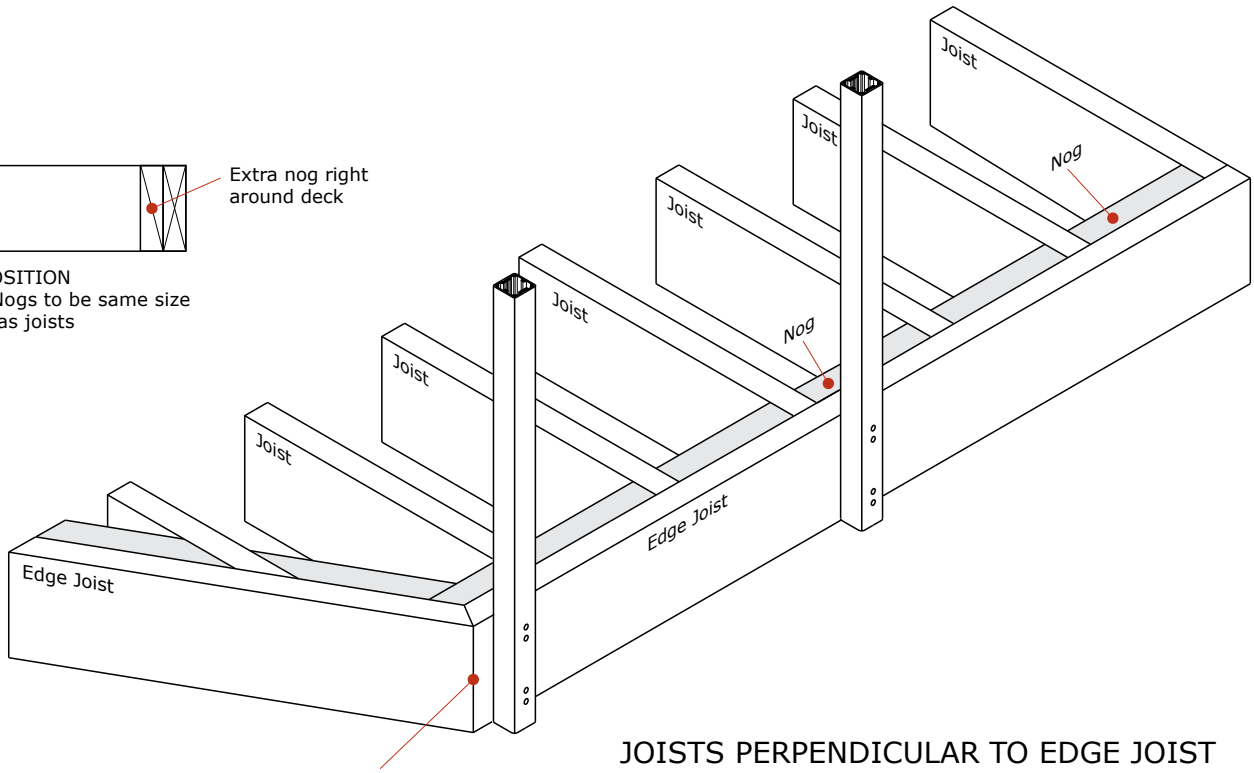

For non-90º corners, solid nog each way
parallel to edge joists as shown above:
For 90º corners, solid nog as shown below:

JOISTS PERPENDICULAR TO EDGE JOIST

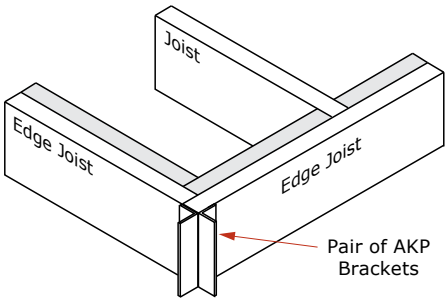

NOGS FOR 90º CORNER

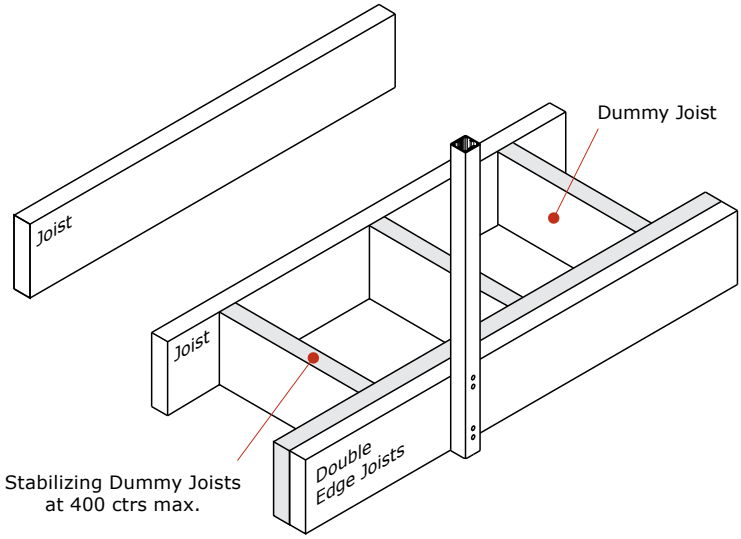

JOISTS PARALLEL TO EDGE JOIST

DRY TIMBER - TOP FIXING, 65MM CRS

Refer to all notes on Pages 66 - 69 which shall apply to this specification and the relevant pages in Chapter 5 Installation Guides. Refer also to Chapter 2 for the Style Specification.

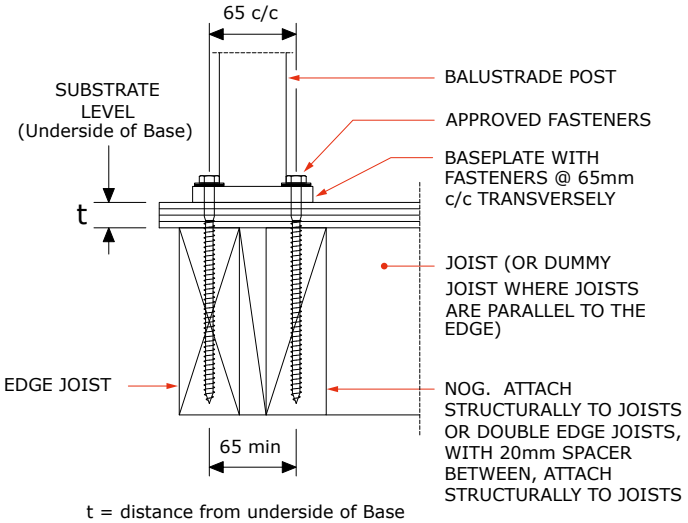

t = distance from underside of Base Plate to top of structural timber

1. For details of approved fasteners refer to Note 3 on Page 66.
2. Washers to be fitted under screw and bolt heads shall be as follows
   - For 6mm fasteners - washer supplied with fasteners.
   - For FC8-165 fasteners - washer supplied with fasteners.
   - For 8mm bolts - 22mm O.D. S/S washer (Part No. FW8-22) with a polymer washer (Part No. FWP8-22G) between the S/S and the aluminium.
   - For Washers bearing against timber use 50 x 50 x 3mm stainless steel washers Part No FW10-50SQ.
3. Substrate design including waterproofing and the structural design of the timber substrate and its connections are not included in this specification and must be carried out by others.

MAXIMUM POST CENTRES 'S max' (metres)

ALWAYS TAKE THE LESSER OF THE VALUE BELOW AND THE VALUE FROM THE STYLE SPECIFICATION

Height[3]	Baseplate Size D x W	Fasteners - Qty and Type[2]	t' (See diagram)	Line No.	LOADING CLASS[1]																			
					N07C/N07R								N03R	Not Preventing Falls										
					Design Wind Speed[4]									Design Wind Speed[4]										
					VH			EH						M			H			VH			EH	
					50	52	54	56	58	60	62	64		38	40	42	44	46	48	50	52	54	56
1.0	90x115	4 x FC8-165	19	1	1.32	1.32	1.32	1.29	1.20	1.12	1.05	0.99	2.83	2.80	2.53	2.29	2.09	1.91	1.76	1.62	1.50	1.39	1.29
	90x115	4 x FC8-165	25	2	1.25	1.25	1.25	1.22	1.14	1.06	0.99	0.93	2.68	2.65	2.39	2.17	1.97	1.81	1.66	1.53	1.41	1.31	1.22
	90x115	4 x FC8-165	32	3	1.18	1.18	1.18	1.14	1.06	0.99	0.93	0.87	2.52	2.47	2.23	2.02	1.84	1.68	1.55	1.43	1.32	1.22	1.14
	90x115	4 x M8 Bolts	N/A	4	1.73	1.73	1.73	1.67	1.56	1.46	1.37	1.28	2.98	2.98	2.98	2.97	2.71	2.48	2.28	2.10	1.94	1.80	1.67
1.1	90x115	4 x FC8-165	19	5	1.20	1.20	1.15	1.07	1.00	0.93	0.87	0.82	2.57	2.32	2.10	1.90	1.73	1.59	1.46	1.34	1.24	1.15	1.07
	90x115	4 x FC8-165	25	6	1.14	1.14	1.09	1.01	0.94	0.88	0.83	0.77	2.45	2.20	1.98	1.80	1.64	1.50	1.38	1.27	1.17	1.09	1.01
	90x115	4 x FC8-165	32	7	1.07	1.07	1.02	0.94	0.88	0.82	0.77	0.72	2.30	2.05	1.85	1.68	1.53	1.40	1.29	1.18	1.10	1.02	0.94
	90x115	4 x M8 Bolts	N/A	8	1.58	1.58	1.50	1.39	1.30	1.21	1.13	1.06	2.98	2.98	2.73	2.47	2.25	2.06	1.89	1.74	1.61	1.50	1.39
1.2	90x115	4 x FC8-165	19	9	1.10	1.05	0.97	0.90	0.84	0.79	0.74	0.69	2.36	1.96	1.77	1.60	1.46	1.34	1.23	1.13	1.05	0.97	0.90
	90x115	4 x FC8-165	25	10	1.05	0.99	0.92	0.85	0.80	0.74	0.70	0.65	2.25	1.85	1.67	1.52	1.38	1.26	1.16	1.07	0.99	0.92	0.85
	90x115	4 x FC8-165	32	11	0.99	0.92	0.86	0.80	0.74	0.69	0.65	0.61	2.11	1.73	1.56	1.42	1.29	1.18	1.09	1.00	0.92	0.86	0.80
	90x115	4 x M8 Bolts	N/A	12	1.45	1.36	1.26	1.17	1.09	1.02	0.96	0.90	2.98	2.55	2.30	2.09	1.90	1.74	1.60	1.47	1.36	1.26	1.17

1. LOADING CLASS: Refer to Page 142 of this Manual for the scope of the Loading Class designations.
2. FASTENER DESIGNATIONS: beginning with 'F' are part numbers for fasteners supplied by UNEX eg. FC8-165: FC = Coach Screw Stainless Steel. 8 = 8mm diameter, 165 = length in mm; Substitution with other fasteners is not permitted.
3. HEIGHT 'H': is the overall height of the balustrade above the substrate level shown. Interpolate for Heights between those shown.
4. DESIGN WIND SPEED: in m/s, Refer to Pages 47 to 48 for details of applicable wind codes and the methods for determining the Design Wind Speed.

DRY TIMBER - TOP FIXING, 90MM CRS

Refer to all notes on Pages 66 -69 which shall apply to this specification and the relevant pages in Chapter 5 Installation Guides. Refer also to Chapter 2 for the Style Specification.

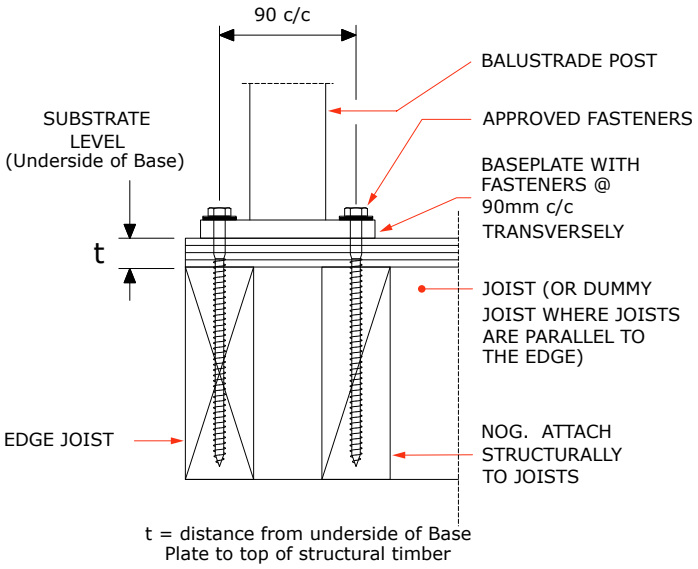

1. For details of approved fasteners refer to Note 3 on Page 66.
2. Washers to be fitted under screw and bolt heads shall be as follows
   - For 6mm fasteners - washer supplied with fasteners.
   - For FC8-165 fasteners - washer supplied with fasteners.
   - For 8mm bolts - 22mm O.D. S/S washer (Part No. FW8-22) with a polymer washer (Part No. FWP8-22G) between the S/S and the aluminium.
   - For Washers bearing against timber use 50 x 50 x 3mm stainless steel washers Part No FW10-50SQ.
3. Substrate design including waterproofing and the structural design of the timber substrate and its connections are not included in this specification and must be carried out by others.

MAXIMUM POST CENTRES 'S max' (metres)

ALWAYS TAKE THE LESSER OF THE VALUE BELOW AND THE VALUE FROM THE STYLE SPECIFICATION

Height[3]	Baseplate Size D x W	Fasteners - Qty and Type[2]	t' (See dia-gram)	Line No.	LOADING CLASS[1]																			
					N07C/N07R								N03R	Not Preventing Falls										
					Design Wind Speed[4]									Design Wind Speed[4]										
					VH		EH							M			H			VH			EH	
					50	52	54	56	58	60	62	64		38	40	42	44	46	48	50	52	54	56
1.0	115x105	4 x FC8-165	19	1	1.72	1.72	1.72	1.68	1.57	1.46	1.37	1.29	3.68	3.65	3.29	2.99	2.72	2.49	2.29	2.11	1.95	1.81	1.68
	115x105	4 x FC8-165	25	2	1.63	1.63	1.63	1.58	1.47	1.38	1.29	1.21	3.48	3.43	3.10	2.81	2.56	2.34	2.15	1.98	1.83	1.70	1.58
	115x105	4 x FC8-165	32	3	1.52	1.52	1.52	1.47	1.37	1.28	1.20	1.13	3.26	3.19	2.88	2.61	2.38	2.18	2.00	1.84	1.70	1.58	1.47
	115x105	4 x M8 Bolts	N/A	4	2.40	2.40	2.40	2.32	2.16	2.02	1.89	1.77	4.62	4.62	4.54	4.12	3.75	3.43	3.15	2.91	2.69	2.49	2.32
1.1	115x105	4 x FC8-165	19	5	1.56	1.56	1.50	1.39	1.30	1.21	1.14	1.07	3.35	3.03	2.73	2.48	2.26	2.06	1.90	1.75	1.62	1.50	1.39
	115x105	4 x FC8-165	25	6	1.48	1.48	1.41	1.31	1.22	1.14	1.07	1.01	3.17	2.85	2.57	2.33	2.13	1.95	1.79	1.65	1.52	1.41	1.31
	115x105	4 x FC8-165	32	7	1.39	1.39	1.31	1.22	1.14	1.06	1.00	0.94	2.97	2.65	2.39	2.17	1.98	1.81	1.66	1.53	1.42	1.31	1.22
	115x105	4 x M8 Bolts	N/A	8	2.19	2.19	2.07	1.93	1.79	1.68	1.57	1.47	4.62	4.18	3.77	3.42	3.12	2.85	2.62	2.41	2.23	2.07	1.93
1.2	115x105	4 x FC8-165	19	9	1.44	1.36	1.26	1.17	1.09	1.02	0.96	0.90	3.08	2.55	2.30	2.09	1.90	1.74	1.60	1.47	1.36	1.26	1.17
	115x105	4 x FC8-165	25	10	1.36	1.28	1.19	1.11	1.03	0.96	0.90	0.85	2.92	2.40	2.17	1.97	1.79	1.64	1.51	1.39	1.28	1.19	1.11
	115x105	4 x FC8-165	32	11	1.27	1.20	1.11	1.03	0.96	0.90	0.84	0.79	2.73	2.24	2.02	1.83	1.67	1.53	1.40	1.29	1.20	1.11	1.03
	115x105	4 x M8 Bolts	N/A	12	2.01	1.88	1.75	1.63	1.52	1.42	1.33	1.24	4.30	3.53	3.19	2.89	2.63	2.41	2.21	2.04	1.88	1.75	1.63

1. LOADING CLASS: Refer to Page 142 of this Manual for the scope of the Loading Class designations.
2. FASTENER DESIGNATIONS: beginning with 'F' are part numbers for fasteners supplied by UNEX eg. FC8-165: FC = Coach Screw Stainless Steel. 8 = 8mm diameter, 165 = length in mm; Substitution with other fasteners is not permitted.
3. HEIGHT 'H': is the overall height of the balustrade above the substrate level shown. Interpolate for Heights between those shown.
4. DESIGN WIND SPEED: in m/s, Refer to Pages 47 to 48 for details of applicable wind codes and the methods for determining the Design Wind Speed.

DRY TIMBER - SIDE FIXING, SCREWS, 90MM EDGE JOIST

Refer to all notes on Pages 66 - 69 which shall apply to this specification and the relevant pages in Chapter 5 Installation Guides. Refer also to Chapter 2 for the Style Specification.

APS2 & APE2 POST TYPES ONLY

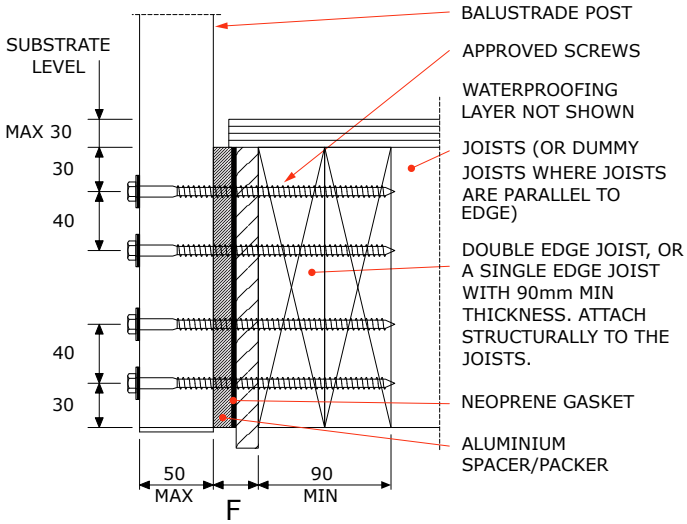

1. For details of approved fasteners refer to Note 3 on Page 66.
2. The post spacings shown are based on the fixing screws having Fully Developed Thread - FDT (i.e. excluding the unthreaded shank) engaging with the full width of the timber joist. This will exist if the dimension 'F' on the diagram is within the limits shown in the Table. Where this does not occur, the post spacing must be reduced, by the proportion of FDT engagement to 90mm. Check suitability of screw protrusion on the inside where this may occur. Sizes of Pass holes in the posts shall not exceed screw diameter plus 1mm.
3. Washers to be fitted under screw and bolt heads shall be as follows
   - For 8mm fasteners - washer supplied with fasteners.
4. Substrate design including waterproofing and the structural design of the timber substrate and its connections are not included in this specification and must be carried out by others.

MAXIMUM POST CENTRES 'S max' (metres)

ALWAYS TAKE THE LESSER OF THE VALUE BELOW AND THE VALUE FROM THE STYLE SPECIFICATION

Height[3]	Post Type	Joist Size	Fasteners - Qty and Type[2]	'F' (See diagram)	Line No.	LOADING CLASS[1]																			
						N07C/N07R								N03R	Not Preventing Falls										
						Design Wind Speed[4]									Design Wind Speed[4]										
						VH		EH							M			H			VH			EH	
						50	52	54	56	58	60	62	64	N/A	38	40	42	44	46	48	50	52	54	56
1.0	APS2	140	3 x FC8-165	0-20	1	-	-	-	-	-	-	-	-	-	1.41	1.27	1.15	1.05	0.96	0.88	0.81	0.75	0.70	0.65
	APS2	190+	4 x FC8-165	0-20	2	1.28	1.28	1.19	1.10	1.03	0.96	0.90	0.84	2.75	2.40	2.16	1.96	1.79	1.63	1.50	1.38	1.28	1.19	1.10
	APE2	140	3 x FC8-165	0-20	3	-	-	-	-	-	-	-	-	-	1.41	1.27	1.15	1.05	0.96	0.88	0.81	0.75	0.70	0.65
	APE2	190	4 x FC8-165	0-20	4	1.28	1.28	1.19	1.10	1.03	0.96	0.90	0.84	2.75	2.40	2.16	1.96	1.79	1.63	1.50	1.38	1.28	1.19	1.10
	APE2	240+	4 x FC8-165	0-20	5	1.79	1.74	1.61	1.50	1.39	1.30	1.22	1.15	3.84	3.25	2.93	2.66	2.42	2.22	2.04	1.88	1.74	1.61	1.50
1.1	APS2	140	3 x FC8-165	0-20	6	-	-	-	-	-	-	-	-	-	1.19	1.07	0.97	0.89	0.81	0.74	0.69	0.63	0.59	0.55
	APS2	190+	4 x FC8-165	0-20	7	1.17	1.08	1.01	0.94	0.87	0.81	0.76	0.72	2.54	2.03	1.83	1.66	1.51	1.39	1.27	1.17	1.08	1.01	0.94
	APE2	140	3 x FC8-165	0-20	8	-	-	-	-	-	-	-	-	-	1.19	1.07	0.97	0.89	0.81	0.74	0.69	0.63	0.59	0.55
	APE2	190	4 x FC8-165	0-20	9	1.17	1.08	1.01	0.94	0.87	0.81	0.76	0.72	2.54	2.03	1.83	1.66	1.51	1.39	1.27	1.17	1.08	1.01	0.94
	APE2	240+	4 x FC8-165	0-20	10	1.60	1.48	1.37	1.27	1.19	1.11	1.04	0.98	3.55	2.77	2.50	2.26	2.06	1.89	1.73	1.60	1.48	1.37	1.27
1.2	APS2	140	3 x FC8-165	0-20	11	-	-	-	-	-	-	-	-	-	1.02	0.92	0.83	0.76	0.69	0.64	0.59	0.54	0.50	0.47
	APS2	190+	4 x FC8-165	0-20	12	1.01	0.93	0.86	0.80	0.75	0.70	0.66	0.61	2.36	1.74	1.57	1.43	1.30	1.19	1.09	1.01	0.93	0.86	0.80
	APE2	140	3 x FC8-165	0-20	13	-	-	-	-	-	-	-	-	-	1.02	0.92	0.83	0.76	0.69	0.64	0.59	0.54	0.50	0.47
	APE2	190	4 x FC8-165	0-20	14	1.01	0.93	0.86	0.80	0.75	0.70	0.66	0.61	2.36	1.74	1.57	1.43	1.30	1.19	1.09	1.01	0.93	0.86	0.80
	APE2	240+	4 x FC8-165	0-20	15	1.38	1.27	1.18	1.10	1.02	0.96	0.90	0.84	3.31	2.39	2.15	1.95	1.78	1.63	1.49	1.38	1.27	1.18	1.10

1. LOADING CLASS: Refer to Page 142 of this Manual for the scope of the Loading Class designations.
2. FASTENER DESIGNATIONS: beginning with 'F' are part numbers for fasteners supplied by UNEX eg. FC8-165: FC = Coach Screw Stainless Steel. 8 = 8mm diameter, 165 = length in mm; Substitution with other fasteners is not permitted.
3. HEIGHT 'H': is the overall height of the balustrade above the substrate level shown. Interpolate for Heights between those shown.
4. DESIGN WIND SPEED: in m/s, Refer to Pages 47 to 48 for details of applicable wind codes and the methods for determining the Design Wind Speed.

DRY TIMBER - SIDE FIXING, BOLTS

Refer to all notes on Pages 66 - 69 which shall apply to this specification and the relevant pages in Chapter 5 Installation Guides. Refer also to Chapter 2 for the Style Specification.

APS2 & APE2 POST TYPES ONLY

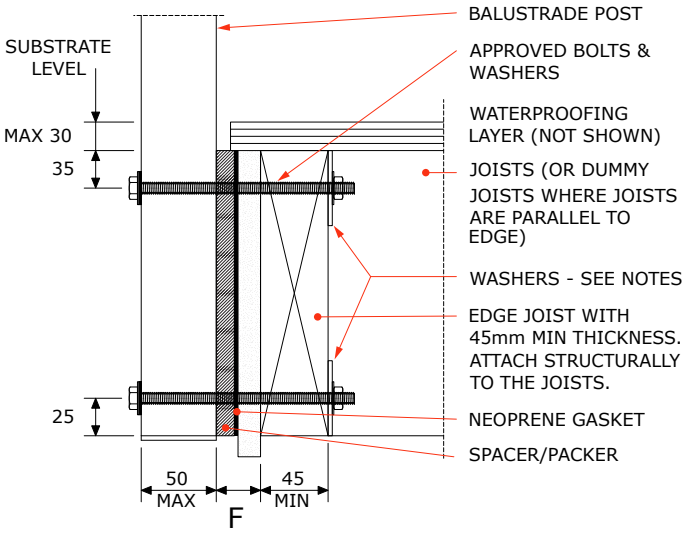

1. For details of approved fasteners refer to Note 3 on Page 66.
2. Washers to be fitted under screw and bolt heads shall be as follows
   - For 8mm bolts - 22mm O.D. S/S washer (Part No. FW8-22) with a polymer washer (Part No. FWP8-22G) between the S/S and the aluminium.
   - For washers bearing against timber use 50 x 50 x 3mm stainless steel washers (Part No. FW10-50SQ).
3. SUBSTRATE design including waterproofing, the structural design of the timber members and their connections, is beyond the scope of this specification and must be carried out by others.
4. Spacings in Table below are based on Dry timber, using Pinus Radiata with a maximum in-service moisture content of 18%. For Wet timber, where the in-service moisture contents will exceed 18%, refer to specification FS.2S.06.03 on Page 79.
5. Substrate design including waterproofing and the structural design of the timber substrate and its connections are not included in this specification and must be carried out by others.

MAXIMUM POST CENTRES 'S max' (metres)

ALWAYS TAKE THE LESSER OF THE VALUE BELOW AND THE VALUE FROM THE STYLE SPECIFICATION

Height[3]	Post Type	Joist Size	Fasteners - Qty and Type[2]	Line No.	LOADING CLASS[1]																		
					N07C/N07R								N03R	Not Preventing Falls									
					Design Wind Speed[4]									Design Wind Speed[4]									
					VH		EH							M			H			VH		EH	
					50	52	54	56	58	60	62	64	1	38	40	42	44	46	48	50	52	54	56
1.0	APS2 APE2	140	2 x M8 Bolts	1	1.22	1.22	1.17	1.09	1.02	0.95	0.95	0.95	1.71	2.16	2.14	1.94	1.77	1.62	1.48	1.37	1.26	1.17	1.09
	APS2	190+	2 x M8 Bolts	2	1.58	1.58	1.58	1.58	1.53	1.43	1.34	1.25	2.42	2.81	2.81	2.81	2.65	2.43	2.23	2.05	1.90	1.76	1.64
	APE2	190	2 x M8 Bolts	3	1.88	1.88	1.83	1.70	1.59	1.48	1.39	1.30	2.42	3.01	3.01	3.01	2.76	2.52	2.32	2.14	1.98	1.83	1.70
	APE2	240+	2 x M8 Bolts	4	2.08	2.08	2.08	2.08	2.00	1.88	1.75	1.65	3.28	3.70	3.70	3.70	3.49	3.19	2.93	2.70	2.50	2.31	2.15
1.1	APS2 APE2	140	2 x M8 Bolts	5	1.12	1.06	0.99	0.95	0.95	0.95	0.89	0.83	1.71	1.83	1.80	1.63	1.49	1.36	1.25	1.15	1.06	0.99	0.95
	APS2	190+	2 x M8 Bolts	6	1.44	1.44	1.44	1.36	1.28	1.19	1.11	1.05	2.23	2.34	2.34	2.34	2.21	2.03	1.86	1.71	1.59	1.48	1.36
	APE2	190	2 x M8 Bolts	7	1.74	1.67	1.55	1.44	1.34	1.25	1.17	1.10	2.23	2.55	2.55	2.55	2.33	2.13	1.96	1.80	1.67	1.55	1.44
	APE2	240+	2 x M8 Bolts	8	1.90	1.90	1.90	1.79	1.68	1.56	1.46	1.38	3.03	3.09	3.09	3.09	2.90	2.65	2.44	2.25	2.08	1.93	1.79
1.2	APS2 APE2	140	2 x M8 Bolts	9	0.98	0.95	0.95	0.91	0.85	0.80	0.75	0.70	1.71	1.55	1.54	1.39	1.27	1.16	1.07	0.98	0.95	0.95	0.91
	APS2	190+	2 x M8 Bolts	10	1.33	1.33	1.25	1.16	1.08	1.01	0.95	0.89	2.07	1.99	1.99	1.99	1.88	1.71	1.58	1.45	1.34	1.25	1.16
	APE2	190	2 x M8 Bolts	11	1.54	1.43	1.32	1.23	1.15	1.07	1.00	0.95	2.07	2.20	2.20	2.19	1.99	1.83	1.68	1.54	1.43	1.32	1.23
	APE2	240+	2 x M8 Bolts	12	1.74	1.74	1.63	1.51	1.41	1.33	1.24	1.16	2.81	2.61	2.61	2.61	2.45	2.25	2.06	1.90	1.76	1.63	1.51

1. LOADING CLASS: Refer to Page 142 of this Manual for the scope of the Loading Class designations.
2. FASTENER DESIGNATIONS: M8 Bolts in the table refer to UNEX Part No's FB8 bolts (Class 70 Stainless Steel), bolts may be substituted with FE8 (M8) Threaded Studs made from 316 Stainless Steel.
3. HEIGHT 'H': is the overall height of the balustrade above the substrate level shown. Interpolate for Heights between those shown.
4. DESIGN WIND SPEED: in m/s, Refer to Pages 47 to 48 for details of applicable wind codes and the methods for determining the Design Wind Speed.

DRY TIMBER - DKG2 FIXING, SCREWS, 90MM EDGE JOIST

This specification for fixing UNEX Balustrades to certain timber substrates where a face gutter is also required. It applies to balustrade styles using APS2 or APE2 posts only. A separate specification must be referred to for the required balustrade style.

APS2 & APE2 POST TYPES ONLY

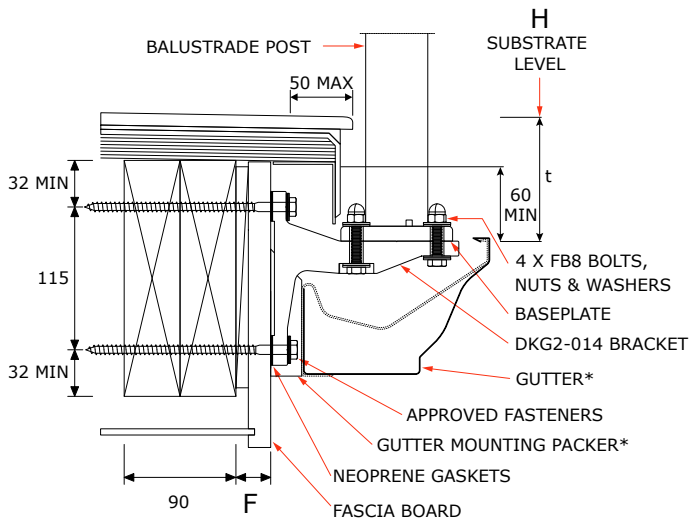

*Gutter and associated clips flashings and packers are not supplied by the UNEX Systems or the balustrade installer. Additional flashings may be required for water deflection in some cases. Gutter profile illustrated is "150mm O/G" from "Continuous Spouting", for more information on supplier visit www.cspout.co.nz. Other gutter profiles may be used. We do not recommend using copper gutters with this detail.

1. The DKG2-014 brackets are required to be installed before the gutter and drip edge.
2. The APS2 or APE2 balustrade posts are attached to the BSMF or BEMF baseplate and DKG2-014 bracket as illustrated on pages 133.
3. The threaded portion of the coach screws must be engaged with the structural timber framing by a minimum of 90mm. This will exist if the dimension 'F' on the diagram (i.e. the distance from the back of the bracket to the face of the timber joist) is within the limits shown in the Table. Where this does not occur the post spacing must be reduced by the proportion of the thread engagement to 90mm
4. Fasteners must be only those supplied by UNEX. Washers to be fitted under screw and bolt heads shall be as follows
   - For FB8 bolts - 22mm O.D. S/S washer (Part No. FW8-22) with a polymer washer (Part No. FWP8-22G) between the S/S and the aluminium.
   - For FC8-165 fasteners - washers supplied with fasteners.
5. The screw holes must be sealed as shown in figure 19 of E2/AS1. Check the suitability of screw protrusion beyond the timber framing.
6. Substrate design including waterproofing and the structural design of the timber substrate and its connections are not included in this specification and must be carried out by others.

MAXIMUM POST CENTRES 'S max' (metres)

ALWAYS TAKE THE LESSER OF THE VALUE BELOW AND THE VALUE FROM THE STYLE SPECIFICATION

Height[3]	't' (See diagram)	Post Type	Fasteners - Qty and Type[2]	'F' (See diagram)	Line No.	LOADING CLASS[1]																		
						N07C/N07R								N03R	Not Preventing Falls									
						Design Wind Speed[4]									Design Wind Speed[4]									
						VH		EH							M			H			VH		EH	
						50	52	54	56	58	60	62	64	1	38	40	42	44	46	48	50	52	54	56
1.0	100	APS2	4 x FC8-165	14-60	1	1.06	1.03	0.96	0.89	0.83	0.78	0.73	0.68	2.26	1.93	1.74	1.58	1.44	1.32	1.21	1.12	1.03	1.03	1.03
	100	APE2	4 x FC8-165	14-60	2	1.28	1.25	1.16	1.08	1.01	0.94	0.88	0.83	2.75	2.35	2.12	1.92	1.75	1.60	1.47	1.36	1.25	1.25	1.25
	150	APS2	4 x FC8-165	14-60	3	1.01	0.95	0.88	0.82	0.77	0.72	0.67	0.63	2.16	1.78	1.61	1.46	1.33	1.22	1.12	1.03	0.95	0.95	0.95
	150	APE2	4 x FC8-165	14-60	4	1.23	1.16	1.07	1.00	0.93	0.87	0.81	0.76	2.63	2.17	1.96	1.77	1.62	1.48	1.36	1.25	1.16	1.16	1.16
	200	APE2	4 x FC8-165	14-60	5	1.16	1.07	1.00	0.93	0.86	0.81	0.76	0.71	2.52	2.01	1.82	1.65	1.50	1.37	1.26	1.16	1.07	1.07	1.07
	250	APE2	4 x FC8-165	14-60	6	1.08	1.00	0.93	0.86	0.81	0.75	0.71	0.66	2.42	1.88	1.70	1.54	1.40	1.28	1.18	1.08	1.00	1.00	1.00
	300	APE2	4 x FC8-165	14-60	7	1.02	0.94	0.87	0.81	0.76	0.71	0.66	0.62	2.32	1.76	1.59	1.44	1.31	1.20	1.10	1.02	0.94	0.94	0.94
	350	APE2	4 x FC8-165	14-60	9	0.96	0.89	0.82	0.76	0.71	0.66	0.62	0.58	2.24	1.66	1.50	1.36	1.24	1.13	1.04	0.96	0.89	0.89	0.89

1. LOADING CLASS: Refer to Page 142 of this Manual for the scope of the Loading Class designations.
2. FASTENER DESIGNATIONS: beginning with 'F' are part numbers for fasteners supplied by UNEX eg. FC8-165: FC = Coach Screw Stainless Steel. 8 = 8mm diameter, 165 = length in mm; Substitution with other fasteners is not permitted.
3. HEIGHT 'H': is the overall height of the balustrade above the substrate level shown. Interpolate for Heights between those shown.
4. DESIGN WIND SPEED: in m/s, Refer to Pages 47 to 48 for details of applicable wind codes and the methods for determining the Design Wind Speed.

WET TIMBER - TOP FIXING, 65MM CRS

Refer to all notes on Pages 66 - 69 which shall apply to this specification and the relevant pages in Chapter 5 Installation Guides. Refer also to Chapter 2 for the Style Specification.

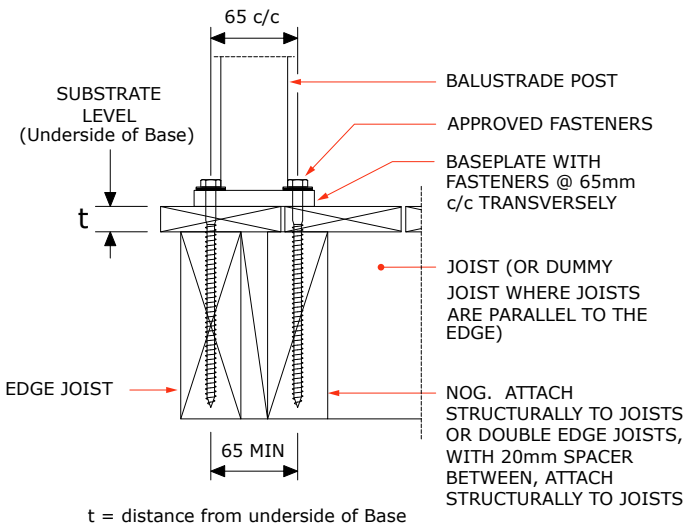

t = distance from underside of Base Plate to top of structural timber

1. For details of approved fasteners refer to Note 3 on Page 66.
2. Washers to be fitted under screw and bolt heads shall be as follows
   - For 6mm fasteners - washer supplied with fasteners.
   - For FC8-165 fasteners - washer supplied with fasteners.
   - For 8mm bolts - 22mm O.D. S/S washer (Part No. FW8-22) with a polymer washer (Part No. FWP8-22G) between the S/S and the aluminium.
   - For Washers bearing against timber use 50 x 50 x 3mm stainless steel washers Part No FW10-50SQ.
3. Substrate design including waterproofing and the structural design of the timber substrate and its connections are not included in this specification and must be carried out by others.
4. Important, the FC8-165 coachscrews in this specification are to be used with the "**Sika Supergrip 2 Hour**" adhesive system (TASG).

MAXIMUM POST CENTRES 'S max' (metres)

ALWAYS TAKE THE LESSER OF THE VALUE BELOW AND THE VALUE FROM THE STYLE SPECIFICATION

Height[3]	Baseplate Size D x W	Fasteners - Qty and Type[2]	t' (See diagram)	Line No.	LOADING CLASS[1]																			
					N07C/N07R								N03R	Not Preventing Falls										
					Design Wind Speed[4]									Design Wind Speed[4]										
					VH			EH						M			H			VH			EH	
					50	52	54	56	58	60	62	64		38	40	42	44	46	48	50	52	54	56
1.0	90x115	4 x FC8-165	19	1	1.13	1.13	1.13	1.11	1.03	0.96	0.90	0.85	2.43	2.40	2.17	1.97	1.79	1.64	1.51	1.39	1.28	1.19	1.11
	90x115	4 x FC8-165	25	2	1.07	1.07	1.07	1.05	0.97	0.91	0.85	0.80	2.30	2.27	2.05	1.86	1.69	1.55	1.42	1.31	1.21	1.12	1.05
	90x115	4 x FC8-165	32	3	1.01	1.01	1.01	0.98	0.91	0.85	0.80	0.75	2.16	2.12	1.91	1.73	1.58	1.45	1.33	1.22	1.13	1.05	0.98
	90x115	4 x M8 Bolts	N/A	4	1.34	1.34	1.34	1.30	1.21	1.13	1.06	0.99	2.87	2.81	2.54	2.30	2.10	1.92	1.76	1.62	1.50	1.39	1.30
1.1	90x115	4 x FC8-165	19	5	1.03	1.03	0.99	0.92	0.86	0.80	0.75	0.70	2.21	1.99	1.80	1.63	1.49	1.36	1.25	1.15	1.06	0.99	0.92
	90x115	4 x FC8-165	25	6	0.98	0.98	0.93	0.87	0.81	0.76	0.71	0.66	2.10	1.88	1.70	1.54	1.41	1.29	1.18	1.09	1.01	0.93	0.87
	90x115	4 x FC8-165	32	7	0.92	0.92	0.87	0.81	0.76	0.71	0.66	0.62	1.97	1.76	1.59	1.44	1.31	1.20	1.10	1.02	0.94	0.87	0.81
	90x115	4 x M8 Bolts	N/A	8	1.22	1.22	1.16	1.08	1.00	0.94	0.88	0.82	2.62	2.34	2.11	1.91	1.74	1.60	1.47	1.35	1.25	1.16	1.08
1.2	90x115	4 x FC8-165	19	9	0.95	0.90	0.83	0.77	0.72	0.67	0.63	0.59	2.03	1.68	1.52	1.38	1.25	1.15	1.05	0.97	0.90	0.83	0.77
	90x115	4 x FC8-165	25	10	0.90	0.85	0.79	0.73	0.68	0.64	0.60	0.56	1.93	1.59	1.43	1.30	1.19	1.08	1.00	0.92	0.85	0.79	0.73
	90x115	4 x FC8-165	32	11	0.85	0.79	0.74	0.68	0.64	0.60	0.56	0.52	1.81	1.49	1.34	1.22	1.11	1.01	0.93	0.86	0.79	0.74	0.68
	90x115	4 x M8 Bolts	N/A	12	1.12	1.05	0.98	0.91	0.85	0.79	0.74	0.70	2.41	1.97	1.78	1.62	1.47	1.35	1.24	1.14	1.05	0.98	0.91

1. LOADING CLASS: Refer to Page 142 of this Manual for the scope of the Loading Class designations.
2. FASTENER DESIGNATIONS: beginning with 'F' are part numbers for fasteners supplied by UNEX eg. FC8-165: FC = Coach Screw Stainless Steel. 8 = 8mm diameter, 165 = length in mm; Substitution with other fasteners is not permitted.
3. HEIGHT 'H': is the overall height of the balustrade above the substrate level shown. Interpolate for Heights between those shown.
4. DESIGN WIND SPEED: in m/s, Refer to Pages 47 to 48 for details of applicable wind codes and the methods for determining the Design Wind Speed.

WET TIMBER - TOP FIXING, 90MM CRS

Refer to all notes on Pages 66 - 69 which shall apply to this specification and the relevant pages in Chapter 5 Installation Guides. Refer also to Chapter 2 for the Style Specification.

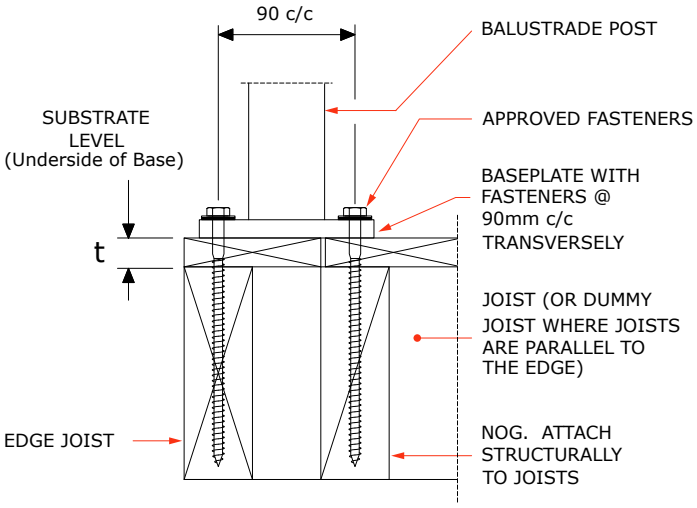

t = distance from underside of Base Plate to top of structural timber

1. For details of approved fasteners refer to Note 3 on Page 66.
2. Washers to be fitted under screw and bolt heads shall be as follows
   - For 6mm fasteners - washer supplied with fasteners.
   - For FC8-165 fasteners - washer supplied with fasteners.
   - For 8mm bolts - 22mm O.D. S/S washer (Part No. FW8-22) with a polymer washer (Part No. FWP8-22G) between the S/S and the aluminium.
   - For Washers bearing against timber use 50 x 50 x 3mm stainless steel washers Part No FW10-50SQ.
3. Substrate design including waterproofing and the structural design of the timber substrate and its connections are not included in this specification and must be carried out by others.
4. Important, the FC8-165 coachscrews in this specification are to be used with the "**Sika Supergrip 2 Hour**" adhesive system (TASG).

MAXIMUM POST CENTRES 'S max' (metres)

ALWAYS TAKE THE LESSER OF THE VALUE BELOW AND THE VALUE FROM THE STYLE SPECIFICATION

Height[3]	Baseplate Size D x W	Fasteners - Qty and Type[2]	t' (See dia-gram)	Line No.	LOADING CLASS[1]																		
					N07C/N07R								N03R	Not Preventing Falls									
					Design Wind Speed[4]									Design Wind Speed[4]									
					VH		EH							M			H			VH		EH	
					50	52	54	56	58	60	62	64		38	40	42	44	46	48	50	52	54	56
1.0	115x105	4 x FC8-165	19	1	1.47	1.47	1.47	1.44	1.34	1.26	1.18	1.10	3.16	3.13	2.83	2.56	2.33	2.14	1.96	1.81	1.67	1.55	1.44
	115x105	4 x FC8-165	25	2	1.40	1.40	1.40	1.36	1.27	1.18	1.11	1.04	2.99	2.95	2.66	2.41	2.20	2.01	1.85	1.70	1.57	1.46	1.36
	115x105	4 x FC8-165	32	3	1.30	1.30	1.30	1.26	1.18	1.10	1.03	0.97	2.80	2.74	2.47	2.24	2.04	1.87	1.72	1.58	1.46	1.36	1.26
	115x105	4 x M8 Bolts	N/A	4	1.86	1.86	1.86	1.79	1.67	1.56	1.46	1.37	3.98	3.90	3.52	3.19	2.91	2.66	2.44	2.25	2.08	1.93	1.79
1.1	115x105	4 x FC8-165	19	5	1.34	1.34	1.29	1.20	1.11	1.04	0.98	0.92	2.88	2.60	2.34	2.12	1.94	1.77	1.63	1.50	1.39	1.29	1.20
	115x105	4 x FC8-165	25	6	1.27	1.27	1.21	1.13	1.05	0.98	0.92	0.86	2.72	2.45	2.21	2.00	1.82	1.67	1.53	1.41	1.31	1.21	1.13
	115x105	4 x FC8-165	32	7	1.19	1.19	1.13	1.05	0.98	0.91	0.85	0.80	2.55	2.28	2.05	1.86	1.70	1.55	1.43	1.31	1.22	1.13	1.05
	115x105	4 x M8 Bolts	N/A	8	1.69	1.69	1.60	1.49	1.39	1.30	1.22	1.14	3.63	3.24	2.92	2.65	2.41	2.21	2.03	1.87	1.73	1.60	1.49
1.2	115x105	4 x FC8-165	19	9	1.23	1.17	1.08	1.01	0.94	0.88	0.82	0.77	2.64	2.19	1.97	1.79	1.63	1.49	1.37	1.26	1.17	1.08	1.01
	115x105	4 x FC8-165	25	10	1.17	1.10	1.02	0.95	0.89	0.83	0.78	0.73	2.50	2.06	1.86	1.69	1.54	1.41	1.29	1.19	1.10	1.02	0.95
	115x105	4 x FC8-165	32	11	1.09	1.03	0.95	0.88	0.82	0.77	0.72	0.68	2.34	1.92	1.73	1.57	1.43	1.31	1.20	1.11	1.03	0.95	0.88
	115x105	4 x M8 Bolts	N/A	12	1.55	1.46	1.35	1.26	1.17	1.10	1.03	0.96	3.33	2.73	2.47	2.24	2.04	1.86	1.71	1.58	1.46	1.35	1.26

1. LOADING CLASS: Refer to Page 142 of this Manual for the scope of the Loading Class designations.
2. FASTENER DESIGNATIONS: beginning with 'F' are part numbers for fasteners supplied by UNEX eg. FC8-165: FC = Coach Screw Stainless Steel. 8 = 8mm diameter, 165 = length in mm; Substitution with other fasteners is not permitted.
3. HEIGHT 'H': is the overall height of the balustrade above the substrate level shown. Interpolate for Heights between those shown.
4. DESIGN WIND SPEED: in m/s, Refer to Pages 47 to 48 for details of applicable wind codes and the methods for determining the Design Wind Speed.

WET TIMBER - SIDE FIXING, SCREWS, 90MM EDGE JOIST

Refer to all notes on Pages 66 - 69 which shall apply to this specification and the relevant pages in Chapter 5 Installation Guides. Refer also to Chapter 2 for the Style Specification.

APS2 & APE2 POST TYPES ONLY

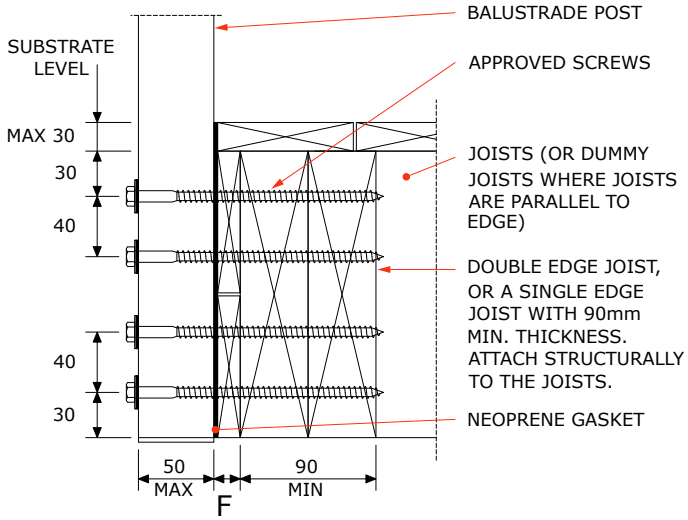

1. For details of approved fasteners refer to Note 3 on Page 66.
2. The post spacings shown are based on the fixing screws having Fully Developed Thread - FDT (i.e. excluding the unthreaded shank) engaging with the full width of the timber joist. This will exist if the dimension 'F' on the diagram is within the limits shown in the Table. Where this does not occur, the post spacing must be reduced, by the proportion of FDT engagement to 90mm. Check suitability of screw protrusion on the inside where this may occur. Sizes of Pass holes in the posts shall not exceed screw diameter plus 1mm.
3. Washers to be fitted under screw and bolt heads shall be as follows
4. For 8mm fasteners - washer supplied with fasteners.
5. Substrate design including waterproofing and the structural design of the timber substrate and its connections are not included in this specification and must be carried out by others.
6. The FC8-165 coachscrews are to be used with the **"Sika Supergrip 2 Hour"** adhesive system (TASG).

MAXIMUM POST CENTRES 'S max' (metres)

ALWAYS TAKE THE LESSER OF THE VALUE BELOW AND THE VALUE FROM THE STYLE SPECIFICATION

Height[3]	Post Type	Joist Size	Fasteners - Qty and Type[2]	'F' (See diagram)	Line No.	LOADING CLASS[1]																			
						N07C/N07R								N03R	Not Preventing Falls										
						Design Wind Speed[4]									Design Wind Speed[4]										
						VH		EH							M			H			VH			EH	
						50	52	54	56	58	60	62	64	N/A	38	40	42	44	46	48	50	52	54	56
1.0	APS2	190	4 x FC8-165	0-20	1	1.10	1.10	1.02	0.95	0.88	0.82	0.77	0.72	2.36	2.06	1.86	1.68	1.53	1.40	1.29	1.19	1.10	1.02	0.95
	APS2	240+	4 x FC8-165	0-20	2	1.54	1.49	1.38	1.28	1.20	1.12	1.05	0.98	3.29	2.79	2.52	2.28	2.08	1.90	1.75	1.61	1.49	1.38	1.28
	APE2	190	4 x FC8-165	0-20	3	1.10	1.10	1.02	0.95	0.88	0.82	0.77	0.72	2.36	2.06	1.86	1.68	1.53	1.40	1.29	1.19	1.10	1.02	0.95
	APE2	240	4 x FC8-165	0-20	4	1.54	1.49	1.38	1.28	1.20	1.12	1.05	0.98	3.29	2.79	2.52	2.28	2.08	1.90	1.75	1.61	1.49	1.38	1.28
	APE2	290	4 x FC8-165	0-20	5	1.94	1.83	1.70	1.58	1.47	1.37	1.29	1.21	4.16	3.43	3.09	2.81	2.56	2.34	2.15	1.98	1.83	1.70	1.58
1.1	APS2	190	4 x FC8-165	0-20	6	1.01	0.93	0.86	0.80	0.75	0.70	0.65	0.61	2.18	1.74	1.57	1.43	1.30	1.19	1.09	1.01	0.93	0.86	0.80
	APS2	240+	4 x FC8-165	0-20	7	1.37	1.27	1.18	1.09	1.02	0.95	0.89	0.84	3.05	2.37	2.14	1.94	1.77	1.62	1.49	1.37	1.27	1.18	1.09
	APE2	190	4 x FC8-165	0-20	8	1.01	0.93	0.86	0.80	0.75	0.70	0.65	0.61	2.18	1.74	1.57	1.43	1.30	1.19	1.09	1.01	0.93	0.86	0.80
	APE2	240	4 x FC8-165	0-20	9	1.37	1.27	1.18	1.09	1.02	0.95	0.89	0.84	3.05	2.37	2.14	1.94	1.77	1.62	1.49	1.37	1.27	1.18	1.09
	APE2	290	4 x FC8-165	0-20	10	1.69	1.57	1.45	1.35	1.26	1.18	1.10	1.03	3.86	2.93	2.64	2.40	2.19	2.00	1.84	1.69	1.57	1.45	1.35
1.2	APS2	190	4 x FC8-165	0-20	11	0.86	0.80	0.74	0.69	0.64	0.60	0.56	0.53	2.02	1.50	1.35	1.22	1.12	1.02	0.94	0.86	0.80	0.74	0.69
	APS2	240+	4 x FC8-165	0-20	12	1.18	1.09	1.01	0.94	0.88	0.82	0.77	0.72	2.84	2.05	1.85	1.68	1.53	1.40	1.28	1.18	1.09	1.01	0.94
	APE2	190	4 x FC8-165	0-20	13	0.86	0.80	0.74	0.69	0.64	0.60	0.56	0.53	2.02	1.50	1.35	1.22	1.12	1.02	0.94	0.86	0.80	0.74	0.69
	APE2	240	4 x FC8-165	0-20	14	1.18	1.09	1.01	0.94	0.88	0.82	0.77	0.72	2.84	2.05	1.85	1.68	1.53	1.40	1.28	1.18	1.09	1.01	0.94
	APE2	290	4 x FC8-165	0-20	15	1.46	1.35	1.26	1.17	1.09	1.02	0.95	0.89	3.51	2.54	2.29	2.08	1.89	1.73	1.59	1.46	1.35	1.26	1.17

1. LOADING CLASS: Refer to Page 142 of this Manual for the scope of the Loading Class designations.
2. FASTENER DESIGNATIONS: beginning with 'F' are part numbers for fasteners supplied by UNEX eg. FC8-165: FC = Coach Screw Stainless Steel. 8 = 8mm diameter, 165 = length in mm; Substitution with other fasteners is not permitted.
3. HEIGHT 'H': is the overall height of the balustrade above the substrate level shown. Interpolate for Heights between those shown.
4. DESIGN WIND SPEED: in m/s, Refer to Pages 47 to 48 for details of applicable wind codes and the methods for determining the Design Wind Speed.

WET TIMBER - SIDE FIXING, SCREWS, 135MM EDGE JOIST

Refer to all notes on Pages 66 - 69 which shall apply to this specification and the relevant pages in Chapter 5 Installation Guides. Refer also to Chapter 2 for the Style Specification.

APS2 & APE2 POST TYPES ONLY

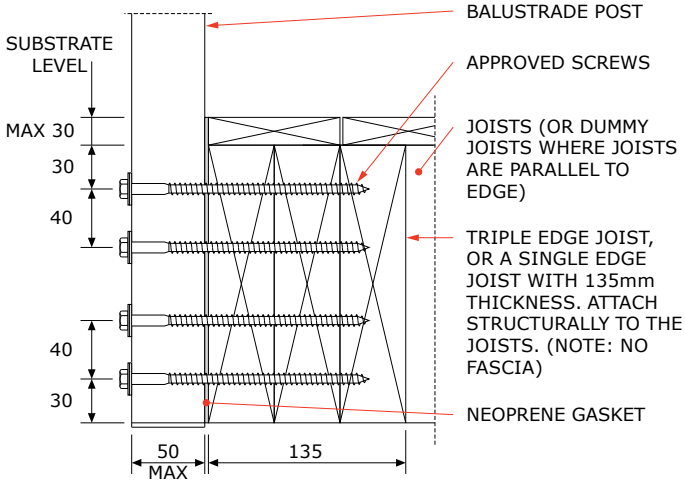

1. For details of approved fasteners refer to Note 3 on Page 66.
2. The post spacings shown are based on the fixing screws having Fully Developed Thread - FDT (i.e. excluding the unthreaded shank) engaging for the full embedment of the screw. This will exist if the balustrade post is attached directly to the timber joist with no fascia or cladding between (except for the neoprene gasket). Sizes of Pass holes in the posts shall not exceed screw diameter plus 1mm.
3. Washers to be fitted under screw and bolt heads shall be as follows
   - For 8mm fasteners - washer supplied with fasteners.
4. Substrate design including waterproofing and the structural design of the timber substrate and its connections are not included in this specification and must be carried out by others.
5. Important, the FC8-165 coachscrews in this specification are to be used with the "**Sika Supergrip 2 Hour**" adhesive system (TASG).

MAXIMUM POST CENTRES 'S max' (metres)

ALWAYS TAKE THE LESSER OF THE VALUE BELOW AND THE VALUE FROM THE STYLE SPECIFICATION

Height[3]	Post Type	Joist Size	Fasteners - Qty and Type[2]	Line No.	LOADING CLASS[1]																		
					N07C/N07R								N03R	Not Preventing Falls									
					Design Wind Speed[4]									Design Wind Speed[4]									
					VH		EH							M			H			VH		EH	
					50	52	54	56	58	60	62	64	1	38	40	42	44	46	48	50	52	54	56
1.0	APS2	190	4 x FC8-165	1	1.38	1.38	1.30	1.21	1.13	1.05	0.99	0.93	2.96	2.63	2.37	2.15	1.96	1.79	1.65	1.52	1.40	1.30	1.21
	APS2	240+	4 x FC8-165	2	1.93	1.90	1.76	1.64	1.52	1.42	1.33	1.25	4.13	3.55	3.21	2.91	2.65	2.42	2.23	2.05	1.90	1.76	1.64
	APE2	190	4 x FC8-165	3	1.38	1.38	1.30	1.21	1.13	1.05	0.99	0.93	2.96	2.63	2.37	2.15	1.96	1.79	1.65	1.52	1.40	1.30	1.21
	APE2	240+	4 x FC8-165	4	1.93	1.90	1.76	1.64	1.52	1.42	1.33	1.25	4.13	3.55	3.21	2.91	2.65	2.42	2.23	2.05	1.90	1.76	1.64
1.1	APS2	190	4 x FC8-165	6	1.26	1.19	1.10	1.02	0.95	0.89	0.83	0.78	2.69	2.22	2.00	1.82	1.66	1.51	1.39	1.28	1.19	1.10	1.02
	APS2	240+	4 x FC8-165	7	1.74	1.61	1.49	1.39	1.29	1.21	1.13	1.06	3.75	3.02	2.72	2.47	2.25	2.06	1.89	1.74	1.61	1.49	1.39
	APE2	190	4 x FC8-165	8	1.26	1.19	1.10	1.02	0.95	0.89	0.83	0.78	2.69	2.22	2.00	1.82	1.66	1.51	1.39	1.28	1.19	1.10	1.02
	APE2	240+	4 x FC8-165	9	1.74	1.61	1.49	1.39	1.29	1.21	1.13	1.06	3.75	3.02	2.72	2.47	2.25	2.06	1.89	1.74	1.61	1.49	1.39
1.2	APS2	190	4 x FC8-165	11	1.10	1.02	0.94	0.88	0.82	0.76	0.71	0.67	2.47	1.90	1.72	1.56	1.42	1.30	1.19	1.10	1.02	0.94	0.88
	APS2	240+	4 x FC8-165	12	1.50	1.39	1.28	1.19	1.11	1.04	0.97	0.91	3.44	2.59	2.34	2.12	1.93	1.77	1.63	1.50	1.39	1.28	1.19
	APE2	190	4 x FC8-165	13	1.10	1.02	0.94	0.88	0.82	0.76	0.71	0.67	2.47	1.90	1.72	1.56	1.42	1.30	1.19	1.10	1.02	0.94	0.88
	APE2	240+	4 x FC8-165	14	1.50	1.39	1.28	1.19	1.11	1.04	0.97	0.91	3.44	2.59	2.34	2.12	1.93	1.77	1.63	1.50	1.39	1.28	1.19

1. LOADING CLASS: Refer to Page 142 of this Manual for the scope of the Loading Class designations.
2. FASTENER DESIGNATIONS: beginning with 'F' are part numbers for fasteners supplied by UNEX eg. FC8-165: FC = Coach Screw Stainless Steel. 8 = 8mm diameter, 165 = length in mm; Substitution with other fasteners is not permitted.
3. HEIGHT 'H': is the overall height of the balustrade above the substrate level shown. Interpolate for Heights between those shown.
4. DESIGN WIND SPEED: in m/s, Refer to Pages 47 to 48 for details of applicable wind codes and the methods for determining the Design Wind Speed.

WET TIMBER - SIDE FIXING, BOLTS

Refer to all notes on Pages 66 - 69 which shall apply to this specification and the relevant pages in Chapter 5 Installation Guides. Refer also to Chapter 2 for the Style Specification.

APS2 & APE2 POST TYPES ONLY

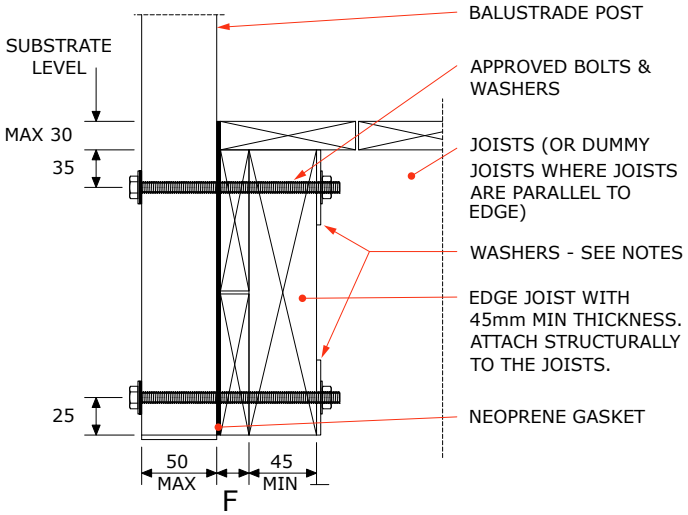

1. For details of approved fasteners refer to Note 3 on Page 66.
2. Washers to be fitted under screw and bolt heads shall be as follows
   - For 8mm bolts - 22mm O.D. S/S washer (Part No. FW8-22) with a polymer washer (Part No. FWP8-22G) between the S/S and the aluminium.
   - For washers bearing against timber use 50 x 50 x 3mm stainless steel washers (Part No. FW10-50SQ).
3. SUBSTRATE design including waterproofing, the structural design of the timber members and their connections, is beyond the scope of this specification and must be carried out by others.
4. Spacings in Table below are based on Wet timber, using Pinus Radiata with an in-service moisture content that exceeds 18%, eg. exposed decks. For Dry timber, where the in-service moisture content is 18% or less, refer to specification FS.1S.06.03 on Page 73.
5. Substrate design including waterproofing and the structural design of the timber substrate and its connections are not included in this specification and must be carried out by others.

MAXIMUM POST CENTRES 'S max' (metres)

ALWAYS TAKE THE LESSER OF THE VALUE BELOW AND THE VALUE FROM THE STYLE SPECIFICATION

Height[3]	Post Type	Joist Size	Fasteners - Qty and Type[2]	Line No.	LOADING CLASS[1]																		
					N07C/N07R								N03R	Not Preventing Falls									
					Design Wind Speed[4]									Design Wind Speed[4]									
					VH		EH							M			H			VH		EH	
					50	52	54	56	58	60	62	64	1	38	40	42	44	46	48	50	52	54	56
1.0	APE2	140	2 x M8 Bolts	1	0.78	0.78	0.77	0.71	0.66	0.62	0.59	0.59	2.49	1.55	1.40	1.27	1.15	1.06	0.97	0.89	0.83	0.77	0.71
	APS2	190	2 x M8 Bolts	2	1.24	1.24	1.19	1.11	1.04	0.97	0.91	0.85	2.49	2.41	2.18	1.97	1.80	1.65	1.51	1.39	1.29	1.19	1.11
	APS2	190+	2 x M8 Bolts	3	1.24	1.24	1.19	1.11	1.04	0.97	0.91	0.85	2.49	2.41	2.18	1.97	1.80	1.65	1.51	1.39	1.29	1.19	1.11
	APE2	240+	2 x M8 Bolts	4	1.68	1.68	1.59	1.48	1.38	1.29	1.21	1.13	2.49	3.21	2.90	2.63	2.40	2.19	2.01	1.86	1.72	1.59	1.48
1.1	APE2	140	2 x M8 Bolts	5	0.71	0.69	0.64	0.60	0.59	0.59	0.59	0.59	2.49	1.30	1.17	1.06	0.97	0.89	0.81	0.75	0.69	0.64	0.60
	APS2	190	2 x M8 Bolts	6	1.14	1.08	1.01	0.93	0.87	0.81	0.76	0.72	2.49	2.03	1.83	1.66	1.51	1.39	1.27	1.17	1.08	1.01	0.93
	APS2	190+	2 x M8 Bolts	7	1.14	1.08	1.01	0.93	0.87	0.81	0.76	0.72	2.49	2.03	1.83	1.66	1.51	1.39	1.27	1.17	1.08	1.01	0.93
	APE2	240+	2 x M8 Bolts	8	1.54	1.45	1.34	1.25	1.16	1.09	1.02	0.96	2.49	2.71	2.45	2.22	2.02	1.85	1.70	1.57	1.45	1.34	1.25
1.2	APE2	140	2 x M8 Bolts	10	0.64	0.59	0.59	0.59	0.59	0.59	0.59	0.59	2.49	1.10	1.00	0.90	0.82	0.75	0.69	0.64	0.59	0.59	0.59
	APS2	190	2 x M8 Bolts	11	1.00	0.93	0.86	0.80	0.74	0.70	0.65	0.61	2.49	1.73	1.56	1.42	1.29	1.18	1.09	1.00	0.93	0.86	0.80
	APS2	190+	2 x M8 Bolts	11	1.00	0.93	0.86	0.80	0.74	0.70	0.65	0.61	2.49	1.73	1.56	1.42	1.29	1.18	1.09	1.00	0.93	0.86	0.80
	APE2	240+	2 x M8 Bolts	12	1.34	1.24	1.15	1.07	1.00	0.93	0.87	0.82	2.49	2.32	2.09	1.90	1.73	1.58	1.45	1.34	1.24	1.15	1.07

1. LOADING CLASS: Refer to Page 142 of this Manual for the scope of the Loading Class designations.
2. FASTENER DESIGNATIONS: M8 Bolts in the table refer to UNEX Part No's FB8 bolts (Class 70 Stainless Steel), bolts may be substituted with FE8 (M8) Threaded Studs made from 316 Stainless Steel.
3. HEIGHT 'H': is the overall height of the balustrade above the substrate level shown. Interpolate for Heights between those shown.
4. DESIGN WIND SPEED: in m/s, Refer to Pages 47 to 48 for details of applicable wind codes and the methods for determining the Design Wind Speed.

NOTES FOR FIXING TO CONCRETE AND MASONRY SUBSTRATES

The following notes refer to specifications for Top Fixing and Side Fixing posts to Concrete and Concrete Masonry substrates.

1. GENERAL

Tables in Section 4 give the maximum post spacings permitted by the strength of the baseplate to substrate connection of Top Fixed posts. Section 3 gives the maximum post spacing permitted governed by the strength of the posts and rails. The maximum post spacing permitted is the LESSER of the spacings tabulated in Section 3 and Section 4.

2. LOADING CLASS

Refer to Page 142 for a description of the various Loading Class designations.

3. FASTENERS

Fasteners shall be manufactured from 316 stainless steel and be supplied by UNEX. They are identified in the tables by their UNEX Part Number. Refer to Catalogue Section 1 eg. - FE8-105: FE = Threaded Stud Stainless Steel; 8 = 8mm diameter; 105 = length in mm.

All studs shell be threaded 316 stainless steel (S/S) with an ultimate tensile stress of not less than 560 MPa and all bolts shall be strength Class 70 with an ultimate tensile stress of not less than 700 MPa.

If using the Epoxy anchoring method, the stud length required can be calculated using the following allowances: -

- FE8 studs (top mounted) - allow 23mm total for an FN8D nut, FW8-22 washer, FWP8-22G polymer washer, and 12mm thick baseplate.
- FE8 studs (Side mounted) - allow 61mm total for an FN8D nut, FW8-22 washer, FWP8-22G polymer washer, SG42-12 neoprene gasket, and 50mm thick post.
- FE10 studs (top mounted) - allow 25mm total for an FN10D nut, FW10-21 washer, FWP10-22G polymer washer, and 12mm thick baseplate.
- FE10 studs (Side mounted) - allow 63mm total for an FN10D nut, FW10-21 washer, FWP10-22G polymer washer, SG42-12 neoprene gasket, and 50mm thick post.

Add to this allowance the thickness of any topping (e.g. plaster, tiles, bedding, etc) and packers, plus the 'd' dimension as shown in the table of the relevant fixing specification, to get the minimum total stud length required.

Where baseplates fix directly on to structural concrete (i.e. no toppings etc are present),this will work out to the following standard stud sizes: -

- FE8 - with 80mm embedment use FE8-105
- FE10 - with 90mm embedment use FE10-115

4. HEIGHT

Height 'H' is the overall height of the balustrade above the substrate level shown. Interpolate for eights between those shown.

5. DESIGN WIND SPEED

Design Wind Speeds are ultimate limit state wind speeds. Guidance on how this may be determined for any site is given on Pages 51 to 52. M, H, VH, and EH indicate Medium, High, Very High, and Extremely High Wind Zones from NZS 3604:2011. Interpolate between wind speeds shown. For Loading Class N07C/N07R and N03R refer to AS/NZS 1170:2002 for determining Wind Speeds.

6. BASEPLATES AND EPOXY ANCHORING

Baseplates shall be attached to the posts as per Page 156 and fixed to the concrete substrate, as illustrated. FE studs as described in Note 3 above, shall be installed and anchored into concrete using the Epoxy Ramset Epcon C6EF system in accordance with the manufacturers instructions. Refer also to instructions in Chapter 5 of this manual.

(continued on following Page)

NOTES FOR FIXING TO CONCRETE AND MASONRY SUBSTRATES - (CONT'D)

7. FABRICATION & INSTALLATION

Fabrication and Installation are to be in accordance with Section 5 of this Manual and where applicable, comply with the relevant requirements of the NZ Building Code.

8. SUBSTRATE DESIGN

Substrate Design including waterproofing and structural design of the concrete and masonry supporting substrate including reinforcement is beyond the scope of this specification and must be carried out by others.

9. CONCRETE

Concrete shall have a minimum 28 day crushing strength of 20MPa.

10. CONCRETE MASONRY

Masonry units shall comply with AS/NZS 4455 with a typical concrete strength of 12 MPa. All masonry units supporting balustrades shall be filled completely with 20MPa concrete infill and be adequately reinforced to resist the balustrade loads.

All fixing must be anchored into the infill concrete for the depths shown. Fixings that pass partly through the web of the masonry unit must pass right through the masonry unit and be anchored with a 50 x 50 x 3mm S/S washer and nut on the far side.

Top fixing is not allowed on walls less then 190mm wide.

Concrete specification DO NOT apply to AAC (Autoclaved Aerated Concrete) cladding panels. Contact UNEX for a Site-Specific PS1 in this instance.

11. GENERAL NOTES ON STEEL SUBSTRATES

Fasteners shall be manufactured from 316 stainless steel and be supplied by UNEX. They are identified in the drawings by their UNEX Part Number. All bolts shall be 316 stainless steel (S/S), strength Class 70, with an ultimate tensile stress of not less than 700 MPa.

Substrate Design including waterproofing and structural design of the steel supporting substrate including reinforcement is beyond the scope of this specification and must be carried out by others.

Any holes drilled into steel shall have a protective coating applied to prevent corrosion. Consult a specialist for advice on the type of coating required.

Any and all aluminium shall be separated from steel using TSS90 tape, or neoprene gaskets, for the entire area in contact.

CONCRETE - TOP FIXING, EPOXY-SET ANCHORS, 65MM CRS

Refer to all notes on Pages 80 and 81 which shall apply to this specification and the relevant pages in Chapter 5 Installation Guides. Refer also to Chapter 2 for the Style Specification.

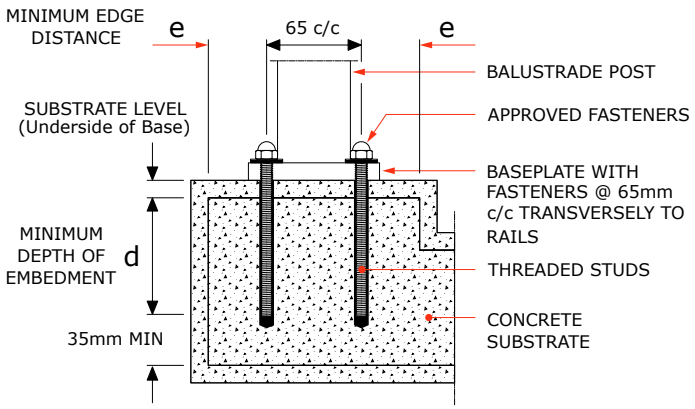

d = MINIMUM DEPTH OF EMBEDMENT INTO STRUCTURAL CONCRETE

e = MINIMUM DISTANCE FROM EDGE OF STRUCTURAL CONCRETE

1. For details of approved fasteners refer to Page 80 note 3. All threaded studs shall have a minimum ultimate tensile stress of 560 MPa.
2. Washers to be fitted under all stud dome nuts as follows
   - For 8mm studs - 22mm O.D. S/S washer (Part No. FW8-22) with a polymer washer (Part No. FWP8-22G) between the S/S and the aluminium.
   - For 10mm studs - 21mm O.D. S/S washer (Part No. FW10-21) with a polymer washer (Part No. FWP10-22G) between the S/S and the aluminium.
3. For details of anchoring studs to the substrate refer to Page 80 note 6.
4. Substrate design, including waterproofing, is beyond the scope of this specification and shall be carried out by others. Concrete shall have a 28 day Compressive Strength of 20MPa or more (as required for substrate design) and be adequately reinforced.

MAXIMUM POST CENTRES 'S max' (metres)

ALWAYS TAKE THE LESSER OF THE VALUE BELOW AND THE VALUE FROM THE STYLE SPECIFICATION

Height[3]	Baseplate Size D x W	Fasteners - Qty and Type[2]	'e' (See dia-gram)	'd' (See dia-gram)	Line No.	LOADING CLASS[1]																	
						N07C/N07R								N03R	Not Preventing Falls								
						Design Wind Speed[4]									Design Wind Speed[4]								
						VH		EH							M			H			VH		EH
						50	52	54	56	58	60	62	64		38	40	42	44	46	48	50	52	54	56
1.0	90x90	2 x M8	40	80	1	1.25	1.25	1.25	1.25	1.16	1.09	1.02	0.95	2.68	2.71	2.44	2.22	2.02	1.85	1.70	1.56	1.45	1.34	1.25
	90x115	2 x M10	40	90	2	1.43	1.43	1.43	1.43	1.33	1.24	1.16	1.09	3.07	3.10	2.80	2.54	2.31	2.11	1.94	1.79	1.65	1.53	1.43
1.1	90x90	2 x M8	40	80	3	1.14	1.14	1.11	1.03	0.96	0.90	0.84	0.79	2.44	2.24	2.02	1.83	1.67	1.53	1.40	1.29	1.19	1.11	1.03
	90x115	2 x M10	40	90	4	1.30	1.30	1.27	1.18	1.10	1.03	0.96	0.90	2.79	2.56	2.31	2.10	1.91	1.75	1.61	1.48	1.37	1.27	1.18
1.2	90x90	2 x M8	40	80	5	1.04	1.00	0.93	0.87	0.81	0.75	0.71	0.66	2.23	1.88	1.70	1.54	1.40	1.28	1.18	1.09	1.00	0.93	0.87
	90x115	2 x M10	40	90	6	1.19	1.15	1.07	0.99	0.92	0.86	0.81	0.76	2.56	2.15	1.94	1.76	1.61	1.47	1.35	1.24	1.15	1.07	0.99

1. 1LOADING CLASS: Refer to Page 142 of this Manual for the scope of the Loading Class designations.
2. FASTENER DESIGNATIONS: M8 and M10 Fasteners in the table refer to UNEX Part No's FE8 and FE10 Threaded Studs.
3. HEIGHT 'H': is the overall height of the balustrade above the substrate level shown. Interpolate for Heights between those shown.
4. DESIGN WIND SPEED: in m/s, Refer to Pages 47 to 48 for details of applicable wind codes and the methods for determining the Design Wind Speed.

CONCRETE - TOP FIXING, EPOXY-SET ANCHORS, 90MM CRS

Refer to all notes on Pages 80 and 81 which shall apply to this specification and the relevant pages in Chapter 5 Installation Guides. Refer also to Chapter 2 for the Style Specification.

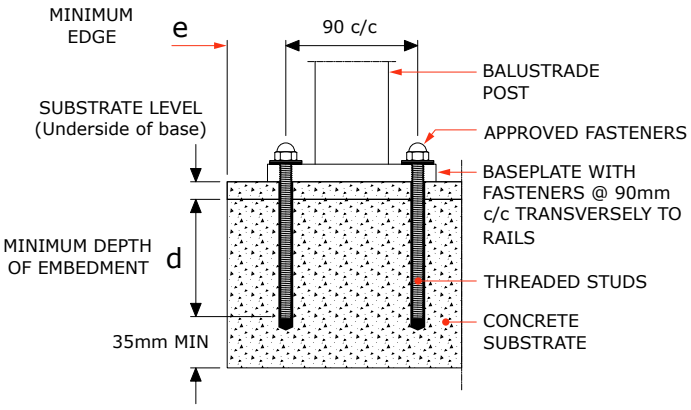

d = MINIMUM DEPTH OF EMBEDMENT INTO STRUCTURAL CONCRETE

e = MINIMUM DISTANCE FROM EDGE OF STRUCTURAL CONCRETE

1. For details of approved fasteners refer to Page 80 note 3. All threaded studs shall have a minimum ultimate tensile stress of 560 MPa.
2. Approved fasteners shall be epoxied into the concrete substrate as shown using EPCON C6 Plus Epoxy.
3. Washers to be fitted under all stud dome nuts as follows
   - For 8mm studs - 22mm O.D. S/S washer (Part No. FW8-22) with a polymer washer (Part No. FWP8-22G) between the S/S and the aluminium.
   - For 10mm studs - 21mm O.D. S/S washer (Part No. FW10-21) with a polymer washer (Part No. FWP10-22G) between the S/S and the aluminium.
4. For details of anchoring studs to the substrate refer to Page 80 note 6.
5. Substrate design, including waterproofing, is beyond the scope of this specification and shall be carried out by others. Concrete shall have a 28 day Compressive Strength of 20MPa or more (as required for substrate design) and be adequately reinforced.

MAXIMUM POST CENTRES 'S max' (metres)

ALWAYS TAKE THE LESSER OF THE VALUE BELOW AND THE VALUE FROM THE STYLE SPECIFICATION

Height[3]	Baseplate Size D x W	Fasteners - Qty and Type[2]	'e' (See dia-gram)	'd' (See dia-gram)	Line No.	LOADING CLASS[1]																	
						N07C/N07R								N03R	Not Preventing Falls								
						Design Wind Speed[4]									Design Wind Speed[4]								
						VH		EH							M			H			VH		EH
						50	52	54	56	58	60	62	64		38	40	42	44	46	48	50	52	54	56
1.0	115X90	2 x M8	40	80	1	0.77	0.77	0.77	0.77	0.71	0.67	0.62	0.59	1.65	1.66	1.50	1.36	1.24	1.13	1.04	0.96	0.89	0.82	0.77
	115X90	2 x M10	40	90	2	1.00	1.00	1.00	1.00	0.93	0.87	0.82	0.77	2.15	2.17	1.96	1.78	1.62	1.48	1.36	1.26	1.16	1.08	1.00
	115X105	4 x M8	40	80	3	1.43	1.43	1.43	1.43	1.33	1.24	1.16	1.09	3.07	3.10	2.80	2.54	2.31	2.12	1.94	1.79	1.66	1.54	1.43
	115X105	4 x M10	40	90	4	1.74	1.74	1.74	1.74	1.62	1.51	1.42	1.33	3.35	3.78	3.41	3.09	2.82	2.58	2.37	2.18	2.02	1.87	1.74
1.1	115X90	2 x M8	40	80	5	0.70	0.70	0.68	0.63	0.59	0.55	0.52	0.48	1.50	1.37	1.24	1.12	1.02	0.94	0.86	0.79	0.73	0.68	0.63
	115X90	2 x M10	40	90	6	0.91	0.91	0.89	0.83	0.77	0.72	0.67	0.63	1.96	1.80	1.62	1.47	1.34	1.23	1.13	1.04	0.96	0.89	0.83
	115X105	4 x M8	40	80	7	1.30	1.30	1.27	1.18	1.10	1.03	0.96	0.90	2.79	2.56	2.31	2.10	1.91	1.75	1.61	1.48	1.37	1.27	1.18
	115X105	4 x M10	40	90	8	1.59	1.59	1.54	1.44	1.34	1.25	1.17	1.10	3.05	3.12	2.82	2.55	2.33	2.13	1.96	1.80	1.67	1.54	1.44
1.2	115X90	2 x M8	40	80	9	0.64	0.62	0.57	0.53	0.50	0.46	0.43	0.41	1.37	1.15	1.04	0.95	0.86	0.79	0.72	0.67	0.62	0.57	0.53
	115X90	2 x M10	40	90	10	0.84	0.81	0.75	0.69	0.65	0.61	0.57	0.53	1.79	1.51	1.36	1.24	1.13	1.03	0.95	0.87	0.81	0.75	0.69
	115X105	4 x M8	40	80	11	1.19	1.15	1.07	0.99	0.92	0.86	0.81	0.76	2.56	2.15	1.94	1.76	1.61	1.47	1.35	1.24	1.15	1.07	0.99
	115X105	4 x M10	40	90	12	1.45	1.40	1.30	1.21	1.13	1.05	0.98	0.92	2.79	2.62	2.37	2.15	1.96	1.79	1.64	1.51	1.40	1.30	1.21

1. 1LOADING CLASS: Refer to Page 142 of this Manual for the scope of the Loading Class designations.
2. FASTENER DESIGNATIONS: M8 and M10 Fasteners in the table refer to UNEX Part No's FE8 and FE10 Threaded Studs.
3. HEIGHT 'H': is the overall height of the balustrade above the substrate level shown. Interpolate for Heights between those shown.
4. DESIGN WIND SPEED: in m/s, Refer to Pages 47 to 48 for details of applicable wind codes and the methods for determining the Design Wind Speed.

CONCRETE - SIDE FIXING, EPOXY-SET ANCHORS

Refer to all notes on Pages 80 and 81 which shall apply to this specification and the relevant pages in Chapter 5 Installation Guides. Refer also to Chapter 2 for the Style Specification.

APS2 & APE2 POST TYPES ONLY

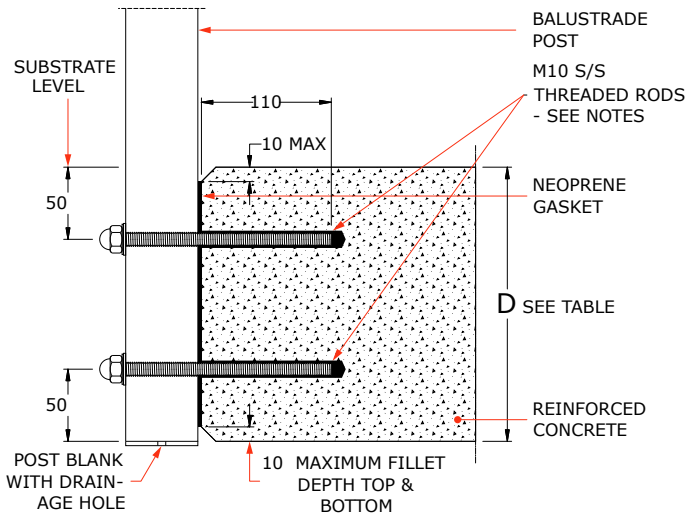

1. Fixings shall be 10mm diameter 316 stainless steel threaded rod epoxied into the concrete substrate as shown using EPCON C6 Plus Epoxy.
2. Washers to be fitted under all stud dome nuts as follows
   - For 10mm studs - 21mm O.D. S/S washer (Part No. FW10-21) with a polymer washer (Part No. FWP10-22G) between the S/S and the aluminium.
3. A neoprene adhesive gasket shall be fixed to the post to prevent contact between the concrete and the aluminium post. Part No. SG36-12 for 40mm wide posts, SG42-12 for 50mm wide posts and SG50-12 for 60mm wide posts.
4. For details of anchoring studs to the substrate refer to Page 80 note 6.
5. Substrate design, including waterproofing, is beyond the scope of this specification and shall be carried out by others. Concrete shall have a 28 day Compressive Strength of 20MPa or more (as required for substrate design) and be adequately reinforced.

MAXIMUM POST CENTRES 'S max' (metres)

ALWAYS TAKE THE LESSER OF THE VALUE BELOW AND THE VALUE FROM THE STYLE SPECIFICATION

Height[3]	Post Type	'D' (See diagram)	Line No.	LOADING CLASS[1]																			
				N07C/N07R								N03R	Not Preventing Falls										
				Design Wind Speed[4]									Design Wind Speed[4]										
				VH		EH							M			H			VH			EH	
				50	52	54	56	58	60	62	64	N/A	38	40	42	44	46	48	50	52	54	56
1.0	APS2	150	1	0.90	0.90	0.90	0.90	0.84	0.78	0.74	0.69	1.54	1.96	1.77	1.60	1.46	1.34	1.23	1.13	1.04	0.97	0.90
		170	2	1.23	1.23	1.23	1.23	1.14	1.07	1.00	0.94	1.54	2.64	2.40	2.18	1.99	1.82	1.67	1.54	1.42	1.32	1.23
		190	3	1.23	1.23	1.23	1.23	1.14	1.07	1.00	0.94	1.54	2.64	2.40	2.18	1.99	1.82	1.67	1.54	1.42	1.32	1.23
	APE2	150	4	0.90	0.90	0.90	0.90	0.84	0.78	0.74	0.69	1.94	1.96	1.77	1.60	1.46	1.34	1.23	1.13	1.04	0.97	0.90
		170	5	1.27	1.27	1.27	1.26	1.18	1.10	1.03	0.97	1.99	2.74	2.47	2.24	2.04	1.87	1.72	1.58	1.46	1.36	1.26
		190	6	1.59	1.59	1.59	1.59	1.48	1.38	1.29	1.21	1.99	3.41	3.11	2.82	2.57	2.35	2.16	1.99	1.84	1.71	1.59
1.1	APS2	150	7	0.82	0.82	0.80	0.74	0.69	0.65	0.61	0.57	1.37	1.62	1.46	1.32	1.21	1.10	1.01	0.93	0.86	0.80	0.74
		170	8	1.10	1.10	1.07	0.99	0.93	0.86	0.81	0.76	1.37	2.16	1.95	1.76	1.61	1.47	1.35	1.25	1.15	1.07	0.99
		190	9	1.10	1.10	1.07	0.99	0.93	0.86	0.81	0.76	1.37	2.16	1.95	1.76	1.61	1.47	1.35	1.25	1.15	1.07	0.99
	APE2	150	10	0.82	0.82	0.80	0.74	0.69	0.65	0.61	0.57	1.76	1.62	1.46	1.32	1.21	1.10	1.01	0.93	0.86	0.80	0.74
		170	11	1.15	1.15	1.12	1.04	0.97	0.91	0.85	0.80	1.78	2.26	2.04	1.85	1.69	1.55	1.42	1.31	1.21	1.12	1.04
		190	12	1.42	1.42	1.38	1.29	1.20	1.12	1.05	0.99	1.78	2.80	2.52	2.29	2.09	1.91	1.75	1.62	1.49	1.38	1.29
1.2	APS2	150	13	0.75	0.73	0.67	0.63	0.58	0.55	0.51	0.48	1.23	1.36	1.23	1.11	1.01	0.93	0.85	0.78	0.73	0.67	0.63
		170	14	0.98	0.95	0.88	0.82	0.76	0.71	0.67	0.63	1.23	1.77	1.60	1.45	1.32	1.21	1.11	1.02	0.95	0.88	0.82
		190	15	0.98	0.95	0.88	0.82	0.76	0.71	0.67	0.63	1.23	1.77	1.60	1.45	1.32	1.21	1.11	1.02	0.95	0.88	0.82
	APE2	150	16	0.75	0.73	0.67	0.63	0.58	0.55	0.51	0.48	1.60	1.36	1.23	1.11	1.01	0.93	0.85	0.78	0.73	0.67	0.63
		170	17	1.05	1.02	0.94	0.88	0.82	0.76	0.71	0.67	1.60	1.90	1.72	1.56	1.42	1.30	1.19	1.10	1.02	0.94	0.88
		190	18	1.28	1.23	1.14	1.06	0.99	0.93	0.87	0.81	1.60	2.31	2.08	1.89	1.72	1.57	1.45	1.33	1.23	1.14	1.06

1. LOADING CLASS: Refer to Page 142 of this Manual for the scope of the Loading Class designations.
2. HEIGHT 'H': is the overall height of the balustrade above the substrate level shown. Interpolate for Heights between those shown.
3. DESIGN WIND SPEED: in m/s, Refer to Pages 47 to 48 for details of applicable wind codes and the methods for determining the Design Wind Speed.

CONCRETE - DKG2 FIXING, EPOXY-SET ANCHORS

This specification for fixing UNEX balustrades to certain concrete substrates where a face gutter is also required. It applies to balustrade styles using APS2 or APE2 posts only. A separate specification must be referred to for the required balustrade style.

APS2 & APE2 POST TYPES ONLY

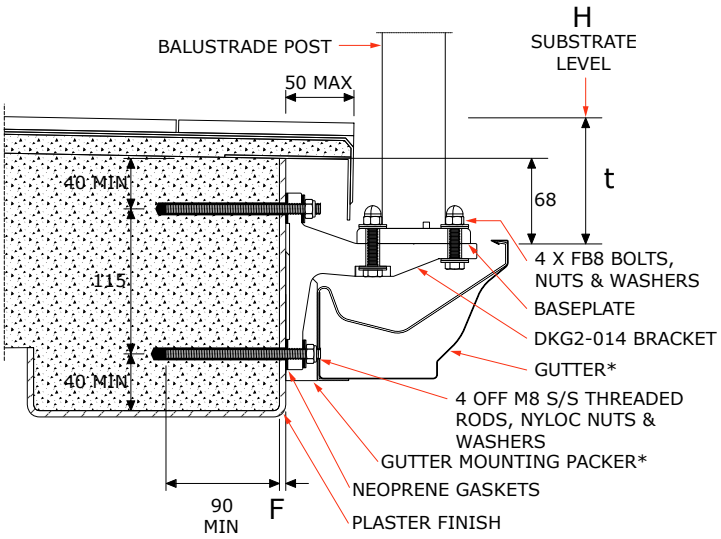

*Gutter and associated clips flashings and packers are not supplied by the UNEX Systems or the balustrade installer. Additional flashings may be required for water deflection in some cases. Gutter profile illustrated is "150mm O/G" from "Continuous Spouting", for more information on supplier visit www.cspout.co.nz. Other gutter profiles may be used. We do not recommend using copper gutters with this detail.

1. The DKG2-014 brackets are required to be installed before the gutter and drip edge.
2. The APS2 or APE2 balustrade posts are attached to the BSMF or BEMF baseplate and DKG2-014 bracket as illustrated on pages 137 and 142.
3. Fixings shall be 8mm diameter 316 stainless steel threaded rod epoxied into the concrete substrate as shown using EPCON C6 Plus Epoxy.
4. Washers to be fitted under all stud Nyloc nuts as follows
   - For 8mm studs - 22mm O.D. S/S washer (Part No. FW8-22) with a polymer washer (Part No. FWP8-22G) between the S/S and the aluminium.
5. A neoprene adhesive gasket shall be fixed to the DKG2-014 bracket to prevent contact between the concrete and the aluminium bracket (Part No. SG24-12).
6. For details of anchoring studs to the substrate refer to General Notes Page 81 note 6.
7. Substrate design, including water-proofing, is beyond the scope of this specification and shall be carried out by others. Concrete shall have a 28 day Compressive Strength of 20MPa or more (as required for substrate design) and be adequately reinforced.

MAXIMUM POST CENTRES 'S max' (metres)

ALWAYS TAKE THE LESSER OF THE VALUE BELOW AND THE VALUE FROM THE STYLE SPECIFICATION

Height[3]	't' (See dia-gram)	Post Type	Fasteners -Qty and Type[2]	'F' (See dia-gram)	Line No.	LOADING CLASS[1]																	
						N07C/N07R								N03R	Not Preventing Falls								
						Design Wind Speed[4]									Design Wind Speed[4]								
						VH		EH							M			H			VH		EH
						50	52	54	56	58	60	62	64	N/A	38	40	42	44	46	48	50	52	54	56
1.0	100	APS2	4 x M8	14-60	1	1.06	1.03	0.96	0.89	0.83	0.78	0.73	0.68	2.26	1.93	1.74	1.58	1.44	1.32	1.21	1.12	1.03	1.03	1.03
	100	APE2	4 x M8	14-60	2	1.28	1.25	1.16	1.08	1.01	0.94	0.88	0.83	2.75	2.35	2.12	1.92	1.75	1.60	1.47	1.36	1.25	1.25	1.25
	150	APS2	4 x M8	14-60	3	1.01	0.95	0.88	0.82	0.77	0.72	0.67	-	2.16	1.78	1.61	1.46	1.33	1.22	1.12	1.03	0.95	0.95	0.95
	150	APE2	4 x M8	14-60	4	1.23	1.16	1.07	1.00	0.93	0.87	0.81	0.76	2.63	2.17	1.96	1.77	1.62	1.48	1.36	1.25	1.16	1.16	1.16
	200	APE2	4 x M8	14-60	5	1.16	1.07	1.00	0.93	0.86	0.81	0.76	-	2.52	2.01	1.82	1.65	1.50	1.37	1.26	1.16	1.07	1.07	1.07
	250	APE2	4 x M8	14-60	6	1.08	1.00	0.93	0.86	0.81	-	-	-	2.42	1.88	1.70	1.54	1.40	1.28	1.18	1.08	1.00	1.00	1.00
	300	APE2	4 x M8	14-60	7	1.02	0.94	0.87	-	-	-	-	-	2.32	1.76	1.59	1.44	1.31	1.20	1.10	1.02	0.94	0.94	-
	350	APE2	4 x M8	14-60	9	-	-	-	-	-	-	-	-	2.24	1.66	1.50	1.36	1.24	1.13	1.04	0.96	-	-	-

1. LOADING CLASS: Refer to Page 142 of this Manual for the scope of the Loading Class designations.
2. FASTENER DESIGNATIONS: beginning with 'F' are part numbers for fasteners supplied by UNEX eg. FC8-165: FC = Coach Screw Stainless Steel. 8 = 8mm diameter, 165 = length(mm) ; 4 x FC8-165 fasteners may be substituted with 4 x M8 bolts (Class 70 Stainless Steel); Substitution with other fasteners is not permitted.
3. HEIGHT 'H': is the overall height of the balustrade above the substrate level shown. Interpolate for Heights between those shown.
4. DESIGN WIND SPEED: in m/s, Refer to Pages 47 to 48 for details of applicable wind codes and the methods for determining the Design Wind Speed.

CONCRETE - POST BUILT INTO

Refer to all notes on Pages 80 and 81 which shall apply to this specification and the relevant pages in Chapter 5 Installation Guides. Refer also to Chapter 2 for the Style Specification.

APS2 & APE2 POST TYPES ONLY

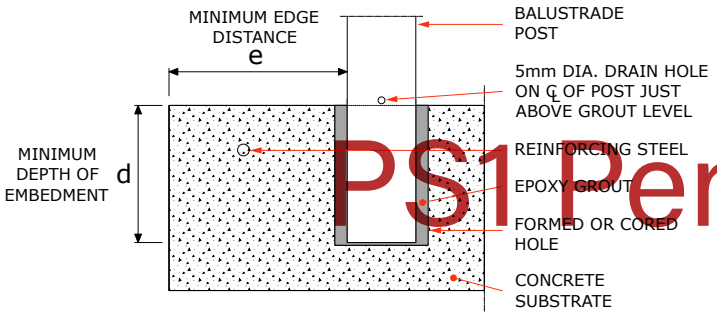

d = MINIMUM DEPTH OF EMBEDMENT INTO STRUCTURAL CONCRETE

e = MINIMUM DISTANCE FROM EDGE OF STRUCTURAL CONCRETE

1. Form or core holes in the substrate to receive the posts with sufficient space allowance for grouting all around the post.
2. After the posts have been temporarily secured in their final position, grout in position with a pourable epoxy grout as shown. Maintain all temporary securing devices in position until the grout has reached a compressive stress of 10 MPa.
3. All embedment depths given in this manual assume the concrete has 28 day crushing strength of 25 MPa. For 20 MPa concrete, decrease the post spacing by 5% or increase the depth of embedment by 5%.
4. The required edge distance 'e' will vary with the post spacing, the concrete strength and the reinforcement in the deck edge. A recommendation for each job should be obtained from the building designer. Where this cannot be obtained or the reinforcing details are unknown use 'e' = 130mm.
5. Required minimum depth of embedment 'd' is shown in the Table below.
6. Substrate design, including waterproofing, is beyond the scope of this specification and shall be carried out by others.

PS1 Pending
Options Available.
Please confirm with
UNEX:
tech@Unex.co.nz

MASONRY - TOP FIXING, EPOXY-SET ANCHORS, 65MM CRS

Refer to all notes on Pages 80 and 81 which shall apply to this specification and the relevant pages in Chapter 5 Installation Guides. Refer also to Chapter 2 for the Style Specification.

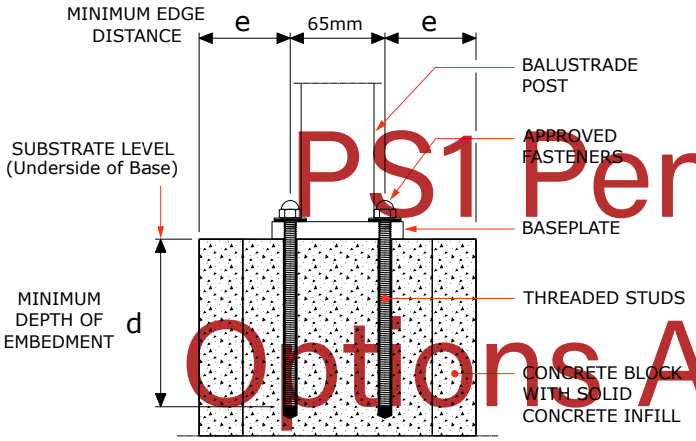

1. For details of approved fasteners refer to Note 3 on Page 80. All threaded studs shall have a minimum ultimate tensile stress of 560 MPa.
2. Approved fasteners shall be epoxied into the concrete substrate as shown using EPCON C6 Plus Epoxy.
3. Washers to be fitted under all stud dome nuts as follows
   - For 8mm studs - 22mm O.D. S/S washer (Part No. FW8-22) with a polymer washer (Part No. FWP8-22G) between the S/S and the aluminium.
   - For 10mm studs - 21mm O.D. S/S washer (Part No. FW10-21) with a polymer washer (Part No. FWP10-22G) between the S/S and the aluminium.
4. For details of anchoring studs to the substrate refer to General Notes Page 109 note 6.
5. Substrate design, including waterproofing, is beyond the scope of this specification and shall be carried out by others. Infill Concrete shall have a 28 day Compressive Strength of 17.5MPa or more (as required for substrate design). Refer also to General Notes on Page 81 note 10.

PS1 Pending
Options Available,
Please confirm with
UNEX:
tech@Unex.co.nz

MASONRY - TOP FIXING, EPOXY-SET ANCHORS, 90MM CRS

Refer to all notes on Pages 80 and 81 which shall apply to this specification and the relevant pages in Chapter 5 Installation Guides. Refer also to Chapter 2 for the Style Specification.

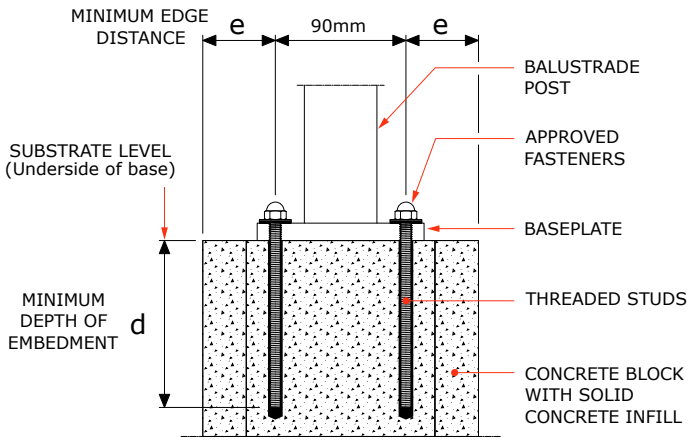

1. For details of approved fasteners refer to Note 3 on Page 80. All threaded studs shall have a minimum ultimate tensile stress of 560 MPa.
2. Approved fasteners shall be epoxied into the concrete substrate as shown using EPCON C6 Plus Epoxy.
3. Washers to be fitted under all stud dome nuts as follows
   - For 8mm studs - 22mm O.D. S/S washer (Part No. FW8-22) with a polymer washer (Part No. FWP8-22G) between the S/S and the aluminium.
   - For 10mm studs - 21mm O.D. S/S washer (Part No. FW10-21) with a polymer washer (Part No. FWP10-22G) between the S/S and the aluminium.
4. For details of anchoring studs to the substrate refer to General Notes Page 80 note 6.
5. Substrate design, including waterproofing, is beyond the scope of this specification and shall be carried out by others. Infill Concrete shall have a 28 day Compressive Strength of 20MPa or more (as required for substrate design). Refer also to General Notes on Page 81 note 10.

MAXIMUM POST CENTRES 'S max' (metres)

ALWAYS TAKE THE LESSER OF THE VALUE BELOW AND THE VALUE FROM THE STYLE SPECIFICATION

Height[3]	Baseplate Size D x W	Fasteners - Qty and Type[2]	'e' (See diagram)	'd' (See diagram)	Line No.	LOADING CLASS[1]																	
						N07C/N07R								N03R	Not Preventing Falls								
						Design Wind Speed[4]									Design Wind Speed[4]								
						VH		EH							M			H			VH		EH
						50	52	54	56	58	60	62	64		38	40	42	44	46	48	50	52	54	56
1.0	90x115	2 x M8	50	115	1	0.92	0.92	0.92	0.91	0.85	0.80	0.75	0.70	1.96	1.98	1.79	1.62	1.48	1.35	1.24	1.15	1.06	0.98	0.91
		2 x M10	50	115	2	1.17	1.17	1.17	1.17	1.09	1.02	0.95	0.90	2.52	2.54	2.29	2.08	1.90	1.73	1.59	1.47	1.36	1.26	1.17
	105x115	4 x M8	50	115	3	1.71	1.71	1.71	1.70	1.59	1.48	1.39	1.30	3.66	3.70	3.34	3.03	2.76	2.52	2.32	2.14	1.98	1.83	1.70
		4 x M10	50	115	4	2.08	2.08	2.08	2.07	1.93	1.81	1.69	1.59	3.94	4.50	4.06	3.68	3.36	3.07	2.82	2.60	2.40	2.23	2.07
1.1	90x115	2 x M8	50	115	5	0.83	0.83	0.81	0.76	0.70	0.66	0.62	0.58	1.79	1.64	1.48	1.34	1.22	1.12	1.03	0.95	0.88	0.81	0.76
		2 x M10	50	115	6	1.07	1.07	1.04	0.97	0.90	0.84	0.79	0.74	2.29	2.10	1.90	1.72	1.57	1.43	1.32	1.21	1.12	1.04	0.97
	105x115	4 x M8	50	115	7	1.55	1.55	1.51	1.41	1.31	1.23	1.15	1.08	3.33	3.06	2.76	2.50	2.28	2.09	1.92	1.77	1.63	1.51	1.41
		4 x M10	50	115	8	1.89	1.89	1.84	1.71	1.60	1.49	1.40	1.31	3.58	3.72	3.36	3.05	2.77	2.54	2.33	2.15	1.99	1.84	1.71
1.2	90x115	2 x M8	50	115	9	0.76	0.74	0.68	0.63	0.59	0.55	0.52	0.49	1.64	1.38	1.24	1.13	1.03	0.94	0.86	0.80	0.74	0.68	0.63
		2 x M10	50	115	10	0.98	0.94	0.87	0.81	0.76	0.71	0.66	0.62	2.10	1.76	1.59	1.44	1.32	1.20	1.11	1.02	0.94	0.87	0.81
	105x115	4 x M8	50	115	11	1.42	1.37	1.27	1.18	1.10	1.03	0.97	0.91	3.05	2.57	2.32	2.10	1.92	1.75	1.61	1.48	1.37	1.27	1.18
		4 x M10	50	115	12	1.73	1.67	1.55	1.44	1.34	1.25	1.17	1.10	3.28	3.13	2.82	2.56	2.33	2.13	1.96	1.81	1.67	1.55	1.44

1. LOADING CLASS: Refer to Page 142 of this Manual for the scope of the Loading Class designations.
2. FASTENER DESIGNATIONS: beginning with 'F' are part numbers for fasteners supplied by UNEX eg. FC8-165: FC = Coach Screw Stainless Steel. 8 = 8mm diameter, 165 = length in mm; Substitution with other fasteners is not permitted.
3. HEIGHT 'H': is the overall height of the balustrade above the substrate level shown. Interpolate for Heights between those shown.
4. DESIGN WIND SPEED: in m/s, Refer to Pages 47 to 48 for details of applicable wind codes and the methods for determining the Design Wind Speed.

MASONRY - SIDE FIXING, GLAZING POSTS, EPOXY-SET ANCHORS

Refer to all notes on Pages 80 and 81 which shall apply to this specification and the relevant pages in Chapter 5 Installation Guides. Refer also to Chapter 2 for the Style Specification.

APS2 & APE2 POST TYPES ONLY

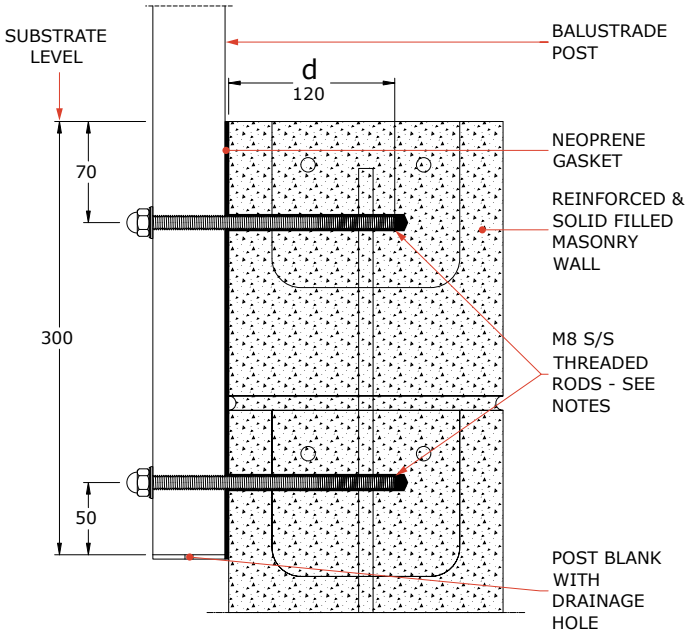

1. Fixings shall be 8mm diameter 316 stainless steel threaded rod epoxied into the masonry wall as shown using EPCON C6 Plus Epoxy. The length of the rod shall be the sum of the embedment depth shown plus the post width, washers, neoprene gasket, and 8mm for the nut grip.
2. Washers to be fitted under all stud dome nuts as follows
   - For 8mm studs - 22mm O.D. S/S washer (Part No. FW8-22) with a polymer washer (Part No. FWP8-22G) between the S/S and the aluminium.
3. A neoprene adhesive gasket shall be fixed to the post to prevent contact between the masonry and the aluminium post. Part No. SG36-12 for 40mm wide posts, SG42-12 for 50mm wide posts and SG50-12 for 60mm wide posts.
4. For details of anchoring studs to the substrate refer to General Notes Page 80 note 6.
5. Substrate design, including waterproofing, is beyond the scope of this specification and shall be carried out by others. Infill Concrete shall have a 28 day Compressive Strength of 20MPa or more (as required for substrate design). Refer also to General Notes on Page 81 note 10.

MAXIMUM POST CENTRES 'S max' (metres)

ALWAYS TAKE THE LESSER OF THE VALUE BELOW AND THE VALUE FROM THE STYLE SPECIFICATION

Height[3]	Post Type	'D' (See diagram)	Line No.	LOADING CLASS[1]																		
				N07C/N07R								N03R	Not Preventing Falls									
				Design Wind Speed[4]									Design Wind Speed[4]									
				VH		EH							M			H			VH		EH	
				50	52	54	56	58	60	62	64	N/A	38	40	42	44	46	48	50	52	54	56
1.0	APS2	120	1	1.29	1.29	1.29	1.29	1.29	1.29	1.29	1.29	2.76	2.76	2.76	2.76	2.76	2.72	2.50	2.30	2.13	1.97	1.83
	APE2	120	2	1.65	1.65	1.65	1.65	1.65	1.65	1.65	1.65	3.54	3.54	3.54	3.54	3.54	3.49	3.20	2.95	2.73	2.53	2.35
1.1	APS2	120	3	1.15	1.15	1.15	1.15	1.15	1.15	1.15	1.10	2.47	2.47	2.47	2.47	2.33	2.13	1.96	1.80	1.67	1.54	1.44
	APE2	120	4	1.48	1.48	1.48	1.48	1.48	1.48	1.48	1.42	3.18	3.18	3.18	3.18	2.99	2.74	2.52	2.32	2.14	1.99	1.85
1.2	APS2	120	5	1.04	1.04	1.04	1.04	1.04	1.00	0.94	0.88	2.08	2.23	2.23	2.05	1.87	1.71	1.57	1.45	1.34	1.24	1.15
	APE2	120	6	1.34	1.34	1.34	1.34	1.34	1.29	1.21	1.14	2.68	2.88	2.88	2.64	2.41	2.20	2.02	1.86	1.72	1.60	1.49

1. LOADING CLASS: Refer to Page 142 of this Manual for the scope of the Loading Class designations.
2. HEIGHT 'H': is the overall height of the balustrade above the substrate level shown. Interpolate for Heights between those shown.
3. DESIGN WIND SPEED: in m/s, Refer to Pages 47 to 48 for details of applicable wind codes and the methods for determining the Design Wind Speed.

STEEL - TOP FIXING, INLINE BOLTS, 75MM WIDE BASEPLATE

Refer to all notes on Pages 80 and 81 which shall apply to this specification and the relevant pages in Chapter 5 Installation Guides. Refer also to Chapter 2 for the Style Specification.

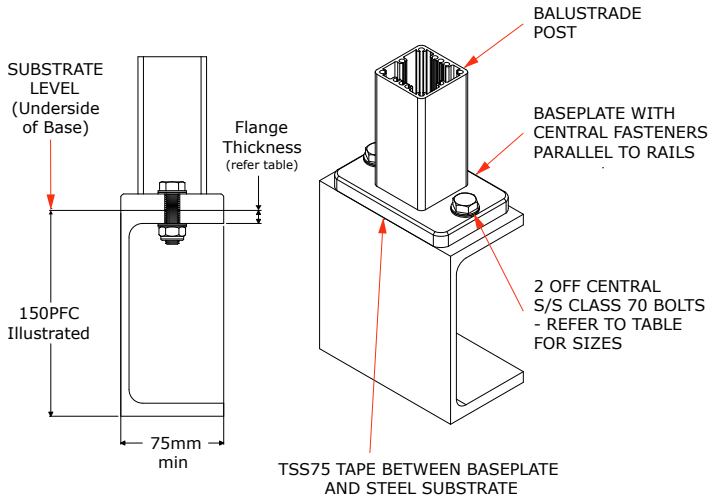

1. All bolts, washers and nyloc nuts fixings shall be Class 70 316 stainless steel.
2. Washers to be fitted under all bolts as follows;
   - For 10mm bolted - 21mm O.D. S/S washer (Part No. FW10-21) with a polymer washer (Part No. FWP10-22G) between the S/S washer, aluminium baseplate and the steel beam.
   - For 12mm tapped - 24mm O.D. S/S washer (Part No. FW12-24) with a polymer washer (Part No. FWP12-22W) between the S/S washer, aluminium baseplate and the steel beam.
3. The maximum post spacing permitted is the LESSER of the spacing tabulated in the Style Specification in Section 3 and spacing shown on the table below.
4. Substrate design, including waterproofing and the structural design of the steel substrate and its connections are not included in this specification and must be carried out by others.
5. Baseplate 75 x 115mm with 2 x Ø13mm inline fixing holes, at 90mm centres;
   BSHR baseplate for **50x50mm** posts
   BEHR baseplate for **50x60mm** posts
6. The steel beam shall be painted with a good quality paint system consisting of a primer and top coat.

MAXIMUM POST CENTRES 'S max' (metres)

ALWAYS TAKE THE LESSER OF THE VALUE BELOW AND THE VALUE FROM THE STYLE SPECIFICATION

Height[3]	Baseplate Size D x W	Fasteners - Qty and Type[2]	Flange Thick-ness (See diagram)	Line No.	LOADING CLASS[1]																		
					N07C/N07R								N03R	Not Preventing Falls									
					Design Wind Speed[4]									Design Wind Speed[4]									
					VH		EH							M			H			VH		EH	
					50	52	54	56	58	60	62	64		38	40	42	44	46	48	50	52	54	56
1.0	75x115	2 x M10 BOLTS	NA	1	1.39	1.39	1.39	1.39	1.29	1.21	1.13	1.06	2.85	3.01	2.72	2.47	2.25	2.06	1.89	1.74	1.61	1.49	1.39
		2 x M12 TAP	9	2	1.09	1.09	1.09	1.09	1.02	0.95	0.89	0.83	2.34	2.37	2.13	1.94	1.76	1.61	1.48	1.37	1.26	1.17	1.09
		2 x M12 TAP	11	3	1.34	1.34	1.34	1.33	1.24	1.16	1.09	1.02	2.85	2.89	2.61	2.37	2.16	1.97	1.81	1.67	1.54	1.43	1.33
		2 x M12 TAP	12	4	1.46	1.46	1.46	1.45	1.35	1.27	1.18	1.11	2.85	3.15	2.85	2.58	2.35	2.15	1.98	1.82	1.68	1.56	1.45
1.1	75x115	2 x M10 BOLTS	NA	5	1.27	1.27	1.23	1.15	1.07	1.00	0.94	0.88	2.59	2.49	2.25	2.04	1.86	1.70	1.56	1.44	1.33	1.23	1.15
		2 x M12 TAP	9	6	0.99	0.99	0.97	0.90	0.84	0.78	0.73	0.69	2.13	1.95	1.76	1.60	1.46	1.33	1.23	1.13	1.04	0.97	0.90
		2 x M12 TAP	11	7	1.21	1.21	1.18	1.10	1.03	0.96	0.90	0.84	2.59	2.39	2.16	1.96	1.78	1.63	1.50	1.38	1.28	1.18	1.10
		2 x M12 TAP	12	8	1.32	1.32	1.29	1.20	1.12	1.05	0.98	0.92	2.59	2.61	2.35	2.13	1.94	1.78	1.63	1.51	1.39	1.29	1.20
1.2	75x115	2 x M10 BOLTS	NA	9	1.16	1.12	1.04	0.96	0.90	0.84	0.79	0.74	2.38	2.09	1.89	1.71	1.56	1.43	1.31	1.21	1.12	1.04	0.96
		2 x M12 TAP	9	10	0.91	0.88	0.81	0.76	0.71	0.66	0.62	0.58	1.95	1.64	1.48	1.34	1.23	1.12	1.03	0.95	0.88	0.81	0.76
		2 x M12 TAP	11	11	1.11	1.07	0.99	0.92	0.86	0.81	0.75	0.71	2.38	2.01	1.81	1.64	1.50	1.37	1.26	1.16	1.07	0.99	0.92
		2 x M12 TAP	12	12	1.21	1.17	1.08	1.01	0.94	0.88	0.82	0.77	2.38	2.19	1.98	1.79	1.63	1.49	1.37	1.27	1.17	1.08	1.01

1. LOADING CLASS: Refer to Page 206 of this Manual for the scope of the Loading Class designations.
2. FASTENER DESIGNATIONS: M8 and M10 Fasteners in table refer to UNEX Part No's FB8 and FB10 bolts.
   "M8 Bolts" = bolted with washers and nyloc nuts. "M10 Tap" = bolts threaded into pre-tapped holes in the steel to good workmanship and threads completely smeared with lanoline grease.
3. HEIGHT 'H': is the overall height of the balustrade above the substrate level shown. Interpolate for Heights between those shown.
4. DESIGN WIND SPEED: in m/s, Refer to Pages 56 to 57 for details of applicable wind codes and the methods for determining the Design Wind Speed.

STEEL - TOP FIXING, INLINE BOLTS, 90MM WIDE BASEPLATE

Refer to all notes on Pages 80 and 81 which shall apply to this specification and the relevant pages in Chapter 5 Installation Guides. Refer also to Chapter 2 for the Style Specification.

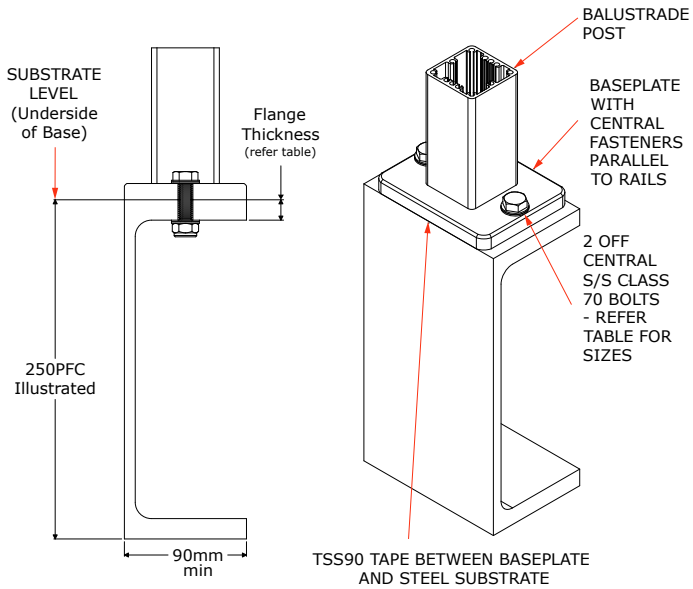

1. All bolts, washers and nyloc nuts fixings shall be Class 70 316 stainless steel.
2. Washers to be fitted under all bolts as follows;
   - For 10mm bolted - 21mm O.D. S/S washer (Part No. FW10-21) with a polymer washer (Part No. FWP10-22G) between the S/S washer, aluminium baseplate and the steel beam.
   - For 12mm tapped - 24mm O.D. S/S washer (Part No. FW12-24) with a polymer washer (Part No. FWP12-22W) between the S/S washer, aluminium baseplate and the steel beam.
3. The maximum post spacing permitted is the LESSER of the spacing tabulated in the Style Specification in Section 3 and spacing shown on the table below.
4. Substrate design, including waterproofing and the structural design of the steel substrate and its connections are not included in this specification and must be carried out by others.
5. Baseplate 90 x 115mm with 2 x Ø13mm inline fixing holes, at 90mm centres;
   BSMR baseplate for **50x50mm** posts
   BEMR baseplate for **50x60mm** posts
6. The steel beam shall be painted with a good quality paint system consisting of a primer and top coat.

MAXIMUM POST CENTRES 'S max' (metres)

ALWAYS TAKE THE LESSER OF THE VALUE BELOW AND THE VALUE FROM THE STYLE SPECIFICATION

Height[3]	Baseplate Size D x W	Fasteners - Qty and Type[2]	Flange Thick-ness (See diagram)	Line No.	LOADING CLASS[1]																		
					N07C/N07R								N03R	Not Preventing Falls									
					Design Wind Speed[4]									Design Wind Speed[4]									
					VH			EH						M			H			VH			EH
					50	52	54	56	58	60	62	64		38	40	42	44	46	48	50	52	54	56
1.0	90x115	2 x M10 BOLTS	NA	1	1.55	1.55	1.55	1.55	1.44	1.35	1.26	1.18	3.03	3.36	3.03	2.75	2.50	2.29	2.10	1.94	1.79	1.66	1.55
	90x115	2 x M12 TAP	9	2	1.08	1.08	1.08	1.08	1.01	0.94	0.88	0.83	2.32	2.35	2.12	1.92	1.75	1.60	1.47	1.36	1.25	1.16	1.08
	90x115	2 x M12 TAP	11	3	1.33	1.33	1.33	1.32	1.23	1.15	1.08	1.01	2.84	2.87	2.59	2.35	2.14	1.96	1.80	1.66	1.53	1.42	1.32
1.1	90x115	2 x M10 BOLTS	NA	4	1.41	1.41	1.37	1.28	1.19	1.11	1.04	0.98	2.75	2.77	2.50	2.27	2.07	1.89	1.74	1.60	1.48	1.37	1.28
	90x115	2 x M12 TAP	9	5	0.99	0.99	0.96	0.89	0.83	0.78	0.73	0.68	2.11	1.94	1.75	1.59	1.45	1.32	1.22	1.12	1.04	0.96	0.89
	90x115	2 x M12 TAP	11	6	1.20	1.20	1.17	1.09	1.02	0.95	0.89	0.84	2.58	2.37	2.14	1.94	1.77	1.62	1.49	1.37	1.27	1.17	1.09
1.2	90x115	2 x M10 BOLTS	NA	7	1.29	1.24	1.15	1.07	1.00	0.93	0.88	0.82	2.52	2.33	2.10	1.91	1.74	1.59	1.46	1.35	1.24	1.15	1.07
	90x115	2 x M12 TAP	9	8	0.90	0.87	0.81	0.75	0.70	0.65	0.61	0.57	1.94	1.63	1.47	1.33	1.22	1.11	1.02	0.94	0.87	0.81	0.75
	90x115	2 x M12 TAP	11	9	1.10	1.06	0.99	0.92	0.85	0.80	0.75	0.70	2.37	1.99	1.80	1.63	1.49	1.36	1.25	1.15	1.06	0.99	0.92

1. LOADING CLASS: Refer to Page 142 of this Manual for the scope of the Loading Class designations.
2. FASTENER DESIGNATIONS: M8 and M10 Fasteners in table refer to UNEX Part No's FB8 and FB10 bolts.
   "M8 Bolts" = bolted with washers and nyloc nuts. "M10 Tap" = bolts threaded into pre-tapped holes in the steel to good workmanship and threads completely smeared with lanoline grease.
3. HEIGHT 'H': is the overall height of the balustrade above the substrate level shown. Interpolate for Heights between those shown.
4. DESIGN WIND SPEED: in m/s, Refer to Pages 47 to 48 for details of applicable wind codes and the methods for determining the Design Wind Speed.

STEEL - TOP FIXING, BOLTS, 65MM CRS

Refer to all notes on Pages 80 and 81 which shall apply to this specification and the relevant pages in Chapter 5 Installation Guides. Refer also to Chapter 2 for the Style Specification.

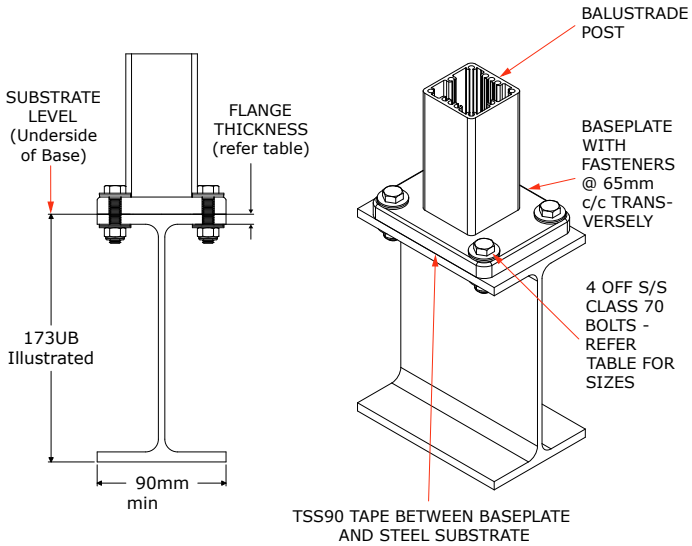

1. All bolts, washers and nyloc nuts fixings shall be Class 70 316 stainless steel.
2. Washers to be fitted under all bolts as follows;
   - For 8mm bolted - 22mm O.D. S/S washer (Part No. FW8-22) with a polymer washer (Part No. FWP8-22G) between the S/S washer, aluminium baseplate and the steel beam.
   - For 10mm tapped - 21mm O.D. S/S washer (Part No. FW10-21) with a polymer washer (Part No. FWP10-22G) between the S/S washer, aluminium baseplate and the steel beam.
3. The maximum post spacing permitted is the LESSER of the spacing tabulated in the Style Specification in Section 3 and spacing shown on the table below.
4. Substrate design, including waterproofing and the structural design of the steel substrate and its connections are not included in this specification and must be carried out by others.
5. Baseplate 90 x 115mm with 4 x Ø11mm fixing holes, at 65mm centres;
   BSMF baseplate for **50x50mm** posts
   BEMF baseplate for **50x60mm** posts
6. The steel beam shall be painted with a good quality paint system consisting of a primer and top coat.

MAXIMUM POST CENTRES 'S max' (metres)

ALWAYS TAKE THE LESSER OF THE VALUE BELOW AND THE VALUE FROM THE STYLE SPECIFICATION

Height[3]	Baseplate Size D x W	Fasteners - Qty and Type[2]	Flange Thick-ness (See diagram)	Line No.	LOADING CLASS[1]																			
					N07C/N07R								N03R	Not Preventing Falls										
					Design Wind Speed[4]									Design Wind Speed[4]										
					VH		EH							M			H			VH			EH	
					50	52	54	56	58	60	62	64		38	40	42	44	46	48	50	52	54	56
1.0	90x115	4 x M8 BOLTS	NA	1	2.41	2.41	2.41	2.40	2.24	2.09	1.96	1.84	5.17	5.22	4.71	4.27	3.89	3.56	3.27	3.02	2.79	2.59	2.40
		4 x M10 TAP	7	2	1.51	1.51	1.51	1.51	1.40	1.31	1.23	1.15	3.24	3.27	2.95	2.68	2.44	2.23	2.05	1.89	1.75	1.62	1.51
1.1	90x115	4 x M8 BOLTS	NA	3	2.19	2.19	2.14	1.99	1.85	1.73	1.62	1.52	4.70	4.32	3.89	3.53	3.22	2.94	2.70	2.49	2.30	2.14	1.99
		4 x M10 TAP	7	4	1.37	1.37	1.34	1.25	1.16	1.08	1.02	0.95	2.95	2.70	2.44	2.21	2.02	1.85	1.70	1.56	1.44	1.34	1.25
1.2	90x115	4 x M8 BOLTS	NA	5	2.01	1.94	1.80	1.67	1.56	1.45	1.36	1.28	4.31	3.63	3.27	2.97	2.70	2.47	2.27	2.09	1.94	1.80	1.67
		4 x M10 TAP	7	6	1.26	1.21	1.13	1.05	0.98	0.91	0.85	0.80	2.70	2.27	2.05	1.86	1.70	1.55	1.42	1.31	1.21	1.13	1.05

1. LOADING CLASS: Refer to Page 206 of this Manual for the scope of the Loading Class designations.
2. FASTENER DESIGNATIONS: M8 and M10 Fasteners in table refer to UNEX Part No's FB8 and FB10 bolts.
   "M8 Bolts" = bolted with washers and nyloc nuts. "M10 Tap" = bolts threaded into pre-tapped holes in the steel to good workmanship and threads completely smeared with lanoline grease.
3. HEIGHT 'H': is the overall height of the balustrade above the substrate level shown. Interpolate for Heights between those shown.
4. DESIGN WIND SPEED: in m/s, Refer to Pages 56 to 57 for details of applicable wind codes and the methods for determining the Design Wind Speed.

STEEL - SIDE FIXING, BOLTS

Refer to all notes on Pages 80 and 81 which shall apply to this specification and the relevant pages in Chapter 5 Installation Guides. Refer also to Chapter 2 for the Style Specification.

APE2 POST TYPES ONLY

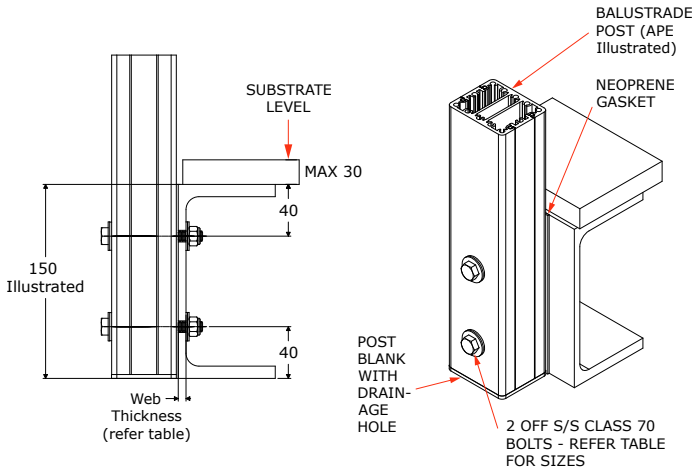

1. All bolts, washers and nyloc nuts fixings shall be Class 70 316 stainless steel.
2. Washers to be fitted under all bolts as follows;
   - For 8mm bolted - 22mm O.D. S/S washer (Part No. FW8-22) with a polymer washer (Part No. FWP8-22G) between the S/S washer, aluminium post and the steel beam.
   - For 10mm tapped - 21mm O.D. S/S washer (Part No. FW10-21) with a polymer washer (Part No. FWP10-22G) between the S/S washer, aluminium post and the steel.
3. The maximum post spacing permitted is the LESSER of the spacing tabulated in the Style Specification in Section 3 and spacing shown on the table below.
4. Substrate design, including waterproofing and the structural design of the steel substrate and its connections are not included in this specification and must be carried out by others.
5. The steel beam shall be painted with a good quality paint system consisting of a primer and top coat.

MAXIMUM POST CENTRES 'S max' (metres)

ALWAYS TAKE THE LESSER OF THE VALUE BELOW AND THE VALUE FROM THE STYLE SPECIFICATION

Height[3]	Post Type (Refer Chapter 1)	Steel Size (Depth)	Fasteners - Qty and Type[2]	Web Thick-ness (See dia-gram)	Line No.	LOADING CLASS[1]																		
						N07C/N07R								N03R	Not Preventing Falls									
						Design Wind Speed[4]									Design Wind Speed[4]									
						VH			EH						M			H			VH			EH
						50	52	54	56	58	60	62	64		38	40	42	44	46	48	50	52	54	56
1.0	APE2	150	2 x M8 BOLTS	NA	1	1.48	1.48	1.48	1.48	1.48	1.36	1.27	1.19	3.18	3.18	3.06	2.78	2.53	2.31	2.12	1.96	1.81	1.68	1.56
		200+	2 x M8 BOLTS	NA	2	1.67	1.67	1.67	1.67	1.67	1.62	1.52	1.43	3.58	4.06	3.66	3.32	3.03	2.77	2.54	2.34	2.16	2.01	1.87
		150	2 x M10 TAP	6	3	0.77	0.77	0.77	0.77	0.77	0.74	0.70	0.65	1.66	1.86	1.68	1.52	1.39	1.27	1.16	1.07	0.99	0.92	0.85
		200+	2 x M10 TAP	6	4	1.08	1.08	1.08	1.08	1.08	1.08	1.02	0.95	2.32	2.71	2.45	2.22	2.02	1.85	1.70	1.56	1.45	1.34	1.25
1.1	APE2	150	2 x M8 BOLTS	NA	5	1.37	1.37	1.37	1.30	1.21	1.13	1.06	0.99	2.93	2.93	2.54	2.31	2.10	1.92	1.77	1.63	1.50	1.39	1.30
		200+	2 x M8 BOLTS	NA	6	1.53	1.53	1.53	1.53	1.44	1.35	1.26	1.18	3.28	3.37	3.04	2.76	2.51	2.30	2.11	1.94	1.80	1.67	1.55
		150	2 x M10 TAP	6	7	0.71	0.71	0.71	0.71	0.66	0.62	0.58	0.54	1.53	1.54	1.39	1.26	1.15	1.05	0.97	0.89	0.82	0.76	0.71
		200+	2 x M10 TAP	6	8	1.00	1.00	1.00	1.00	0.96	0.90	0.84	0.79	2.15	2.25	2.03	1.84	1.68	1.54	1.41	1.30	1.20	1.11	1.03
1.2	APE2	150	2 x M8 BOLTS	NA	9	1.27	1.27	1.18	1.09	1.02	0.95	0.89	0.84	2.72	2.38	2.15	1.95	1.77	1.62	1.49	1.37	1.27	1.18	1.09
		200+	2 x M8 BOLTS	NA	10	1.41	1.41	1.41	1.31	1.22	1.14	1.06	1.00	3.02	2.84	2.57	2.33	2.12	1.94	1.78	1.64	1.52	1.41	1.31
		150	2 x M10 TAP	6	11	0.66	0.66	0.64	0.60	0.56	0.52	0.49	0.46	1.42	1.30	1.18	1.07	0.97	0.89	0.81	0.75	0.69	0.64	0.60
		200+	2 x M10 TAP	6	12	0.93	0.93	0.93	0.87	0.81	0.76	0.71	0.67	2.00	1.90	1.72	1.56	1.42	1.30	1.19	1.10	1.01	0.94	0.87

1. LOADING CLASS: Refer to Page 142 of this Manual for the scope of the Loading Class designations.
2. FASTENER DESIGNATIONS: M8 and M10 Fasteners in table refer to UNEX Part No's FB8 and FB10 bolts.
   "M8 Bolts" = bolted with washers and nyloc nuts. "M10 Tap" = bolts threaded into pre-tapped holes in the steel to good workmanship and threads completely smeared with lanoline grease.
3. HEIGHT 'H': is the overall height of the balustrade above the substrate level shown. Interpolate for Heights between those shown.
4. DESIGN WIND SPEED: in m/s, Refer to Pages 47 to 48 for details of applicable wind codes and the methods for determining the Design Wind Speed.

CHAPTER 4 - SEMI-FRAMELESS GLASS ASSEMBLY SPECIFICATIONS

SPEC ID	STYLE (RAIL TYPE)	
AS.35.00	'Vetro' (No Rail)	pg95
AS.35.05S	'Vetro' (ART Side Rail)	pg96
AS.35.06S	'Vetro' (PRR Side Rail)	pg97
AS.35.08S	'Vetro' (VRE Side Rail)	pg98
AS.35.12S	'Vetro' (VRR Side Rail)	pg99
AS.35.04S	'Vetro' (VRT Side Rail)	pg100
AS.35.14S	'Vetro' (LRR Side Rail)	pg101
AS.36.00	'Surreal' (No Rail)	pg102
AS.36.05S	'Surreal' (ART Side Rail)	pg103
AS.36.06S	'Surreal' (PRR Side Rail)	pg104
AS.36.08S	'Surreal' (VRE Side Rail)	pg105
AS.36.12S	'Surreal' (VRR Side Rail)	pg106
AS.36.04S	'Surreal' (VRT Side Rail)	pg107
AS.36.14S	'Surreal' (LRR Side Rail)	pg108

'VETRO' (NO RAIL)

Refer elsewhere for corners, slopes and other situations not illustrated here.

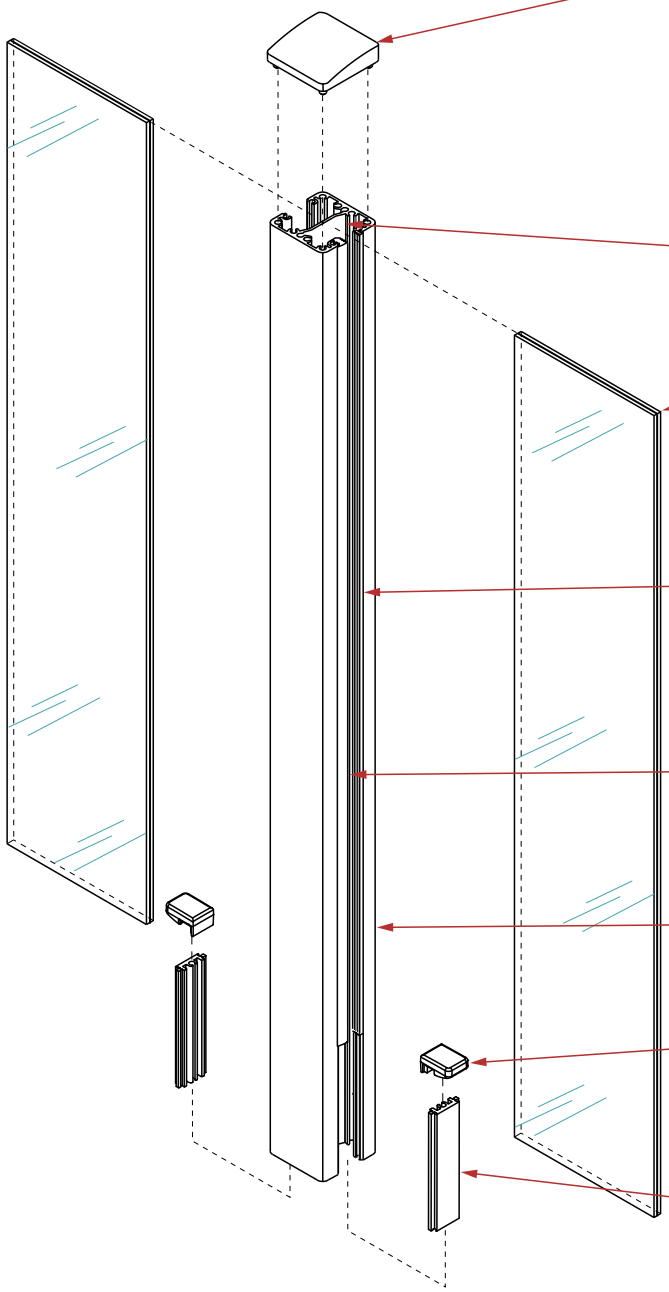

ACPR POST CAP (Illustrated) for 50 x 50 post, or ACPE for 50 x 60 post. Alternatively, use ACEFS as flat blank for 50 x 60 APE2 post or ACFFS on 50 x 50 APS post. Push fit to top of post after installation of glass. Secure to posts with a small amount of silicon or adhesive on the prongs.

STRUCTURAL GLAZING: Both the vertical edges of the glass shall attach to the post with structural TASD-795 silicone sealant, for the full height and thickness of the glass.

EVA TOUGHENED LAMINATED GLASS, of appropriate thickness, depending on the post spacing. Refer to Style Specification. Exposed horizontal edges to be flat polished.

SRG40 RETAINED GASKET to the outer face of glass 10mm or 12mm glass. SRG70 RETAINED GASKET used for 8mm glass. Must be slid into post prior to assembly.

WEDGE GASKET to the inner face of glass, SWE50 (with SRG70 RETAINED GASKET) for 8mm glass, SWE55 for 10mm glass, or SWE35 for 12mm glass.

APS2 or APE2 RECESSED POST. On 90° corners use APQ2 CORNER RECESSED POST

AKS2 BRACKET, to support glass. Attach to AIA insert (press fit). For further detail of bracket attachment for situations, refer to "AKS attachment" pages in Chapter 5.

AIA INSERT for supporting glass by transferring weight down to base plate or substrate.

'VETRO' (ART SIDE RAIL)

Refer elsewhere for corners, slopes and other situations not illustrated here.

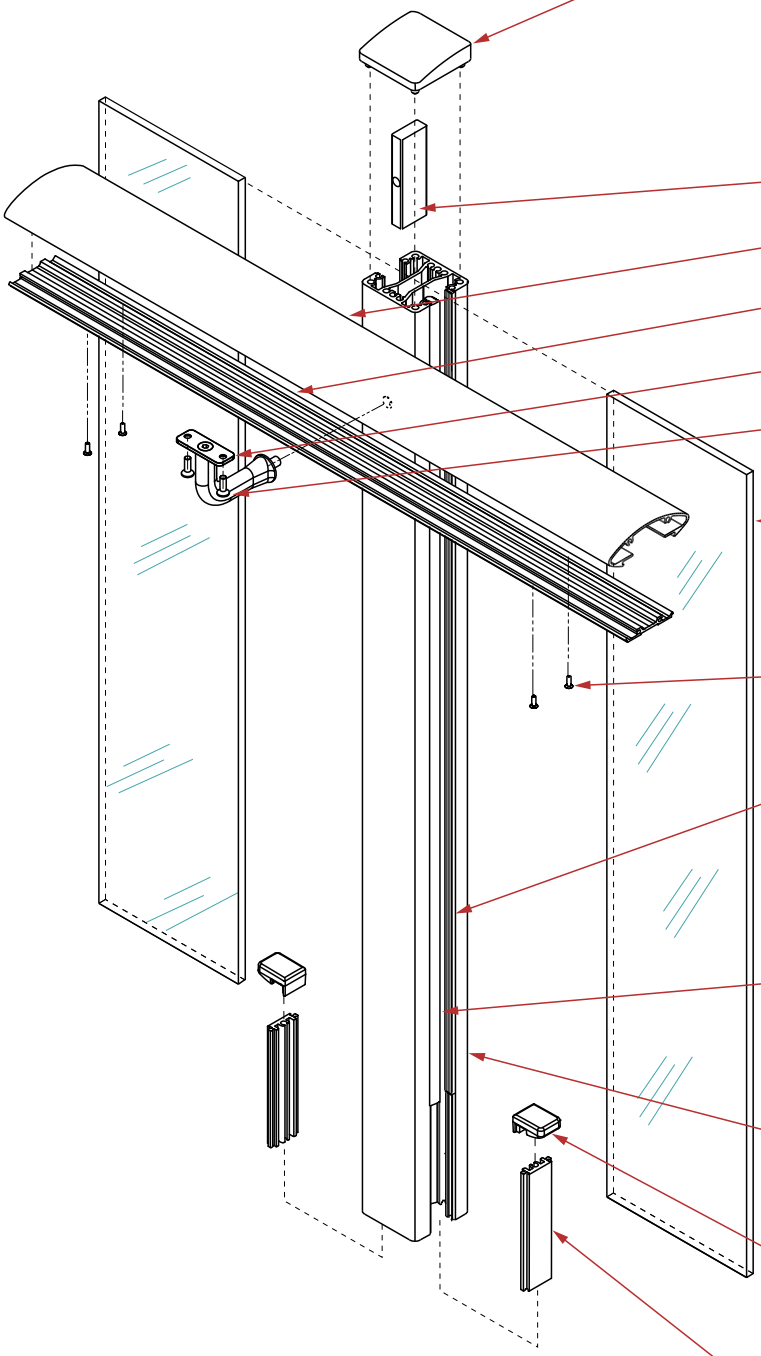

ACPR POST CAP (Illustrated) for 50 x 50 post, or ACPE for 50 x 60 post. Alternatively, use ACEFS as flat blank for 50 x 60 APE2 post or ACFFS on 50 x 50 APS post. Push fit to top of post after installation of glass. Secure to posts with a small amount of silicon or adhesive on the prongs.

POST INSERT (part of LBWN8 bracket)

ART TOP RAIL

DRH INNER SIDE RAIL

LBWN BRACKETS WITH FIXINGS

FV10-19TR.T1 SELF TAPPER SCREWS Drill size in DRH = Ø4.1mm

TOUGHENED GLASS PANELS of appropriate thickness, refer to the Style Specification. All exposed edges to be Flat Polished.

FS4-4B RIVETS. 1 pair at 1000mm maximum centres between. Drill size = Ø3.3mm.

SRG40 RETAINED GASKET to the outer face of glass 10mm or 12mm glass. SRG70 RETAINED GASKET used for 8mm glass. Must be slid into post prior to assembly.

WEDGE GASKET to the inner face of glass, either SWE50 (with SRG70 RETAINED GASKET) for 8mm glass, SWE55 for 10mm glass, or SWE35 for 12mm glass.

APS2 RECESSED POST(illustrated), or APE2. On 90° corners use APQ2 CORNER RECESSED POST.

AKS2 BRACKET, to support glass. Attach to AIA insert (press fit). For further detail of bracket attachment for situations, refer to "AKS attachment" pages in Chapter 5.

AIA INSERT supports glass by transferring weight down to base plate or substrate.

Note: Side rail height shall not be less than the minimum barrier height, as required in F4/AS1.

'VETRO' (PRR SIDE RAIL)

Refer elsewhere for corners, slopes and other situations not illustrated here.

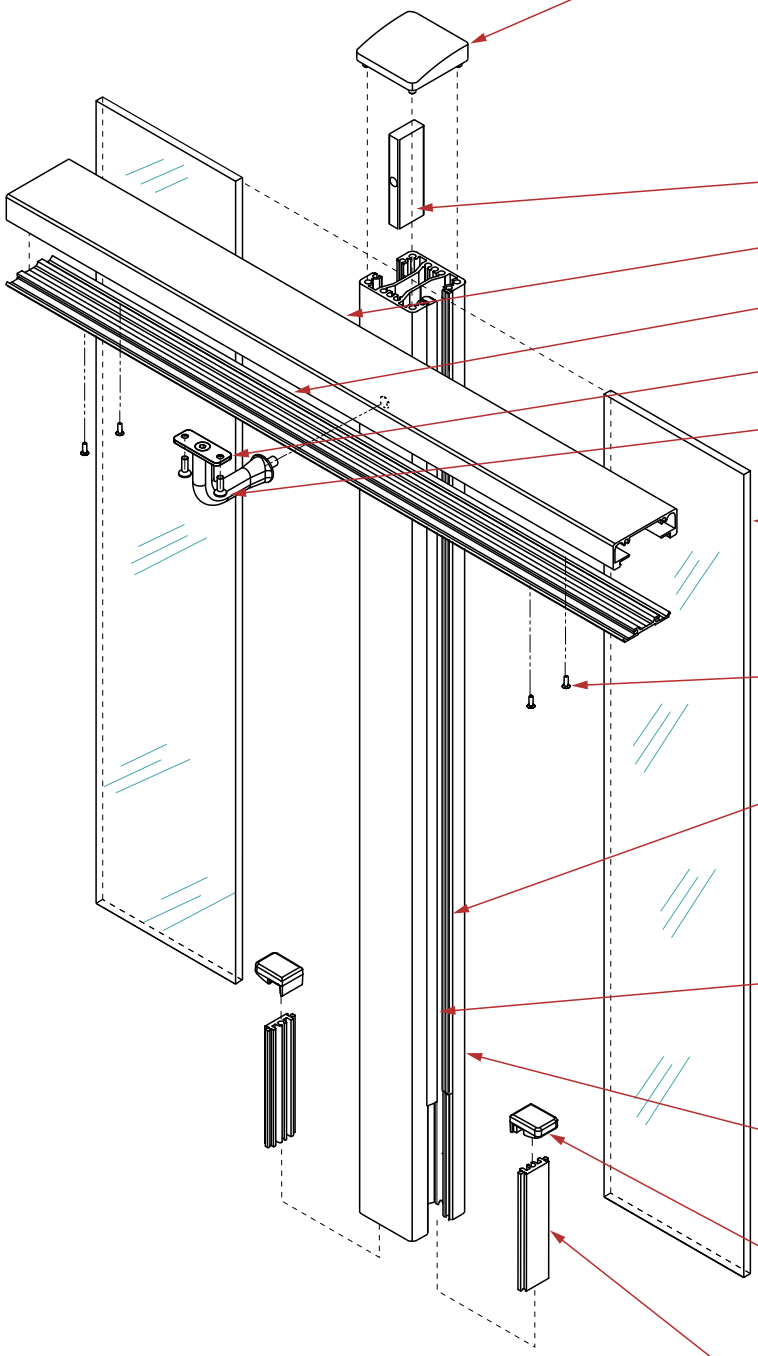

ACPR POST CAP (Illustrated) for 50 x 50 post, or ACPE for 50 x 60 post. Alternatively, use ACEFS as flat blank for 50 x 60 APE2 post or ACFFS on 50 x 50 APS post. Push fit to top of post after installation of glass. Secure to posts with a small amount of silicon or adhesive on the prongs.

POST INSERT (part of LBWN8 bracket)

PRR TOP RAIL

DRH INNER SIDE RAIL

LBWN BRACKETS WITH FIXINGS

FV10-19TR.T1 SELF TAPPER SCREWS Drill size in DRH = Ø4.1mm

TOUGHENED GLASS PANELS of appropriate thickness, refer to the Style Specification. All exposed edges to be Flat Polished.

FS4-4B RIVETS. 1 pair at 1000mm maximum centres between. Drill size = Ø3.3mm.

SRG40 RETAINED GASKET to the outer face of glass 10mm or 12mm glass. SRG70 RETAINED GASKET used for 8mm glass. Must be slid into post prior to assembly.

WEDGE GASKET to the inner face of glass, either SWE50 (with SRG70 RETAINED GASKET) for 8mm glass, SWE55 for 10mm glass, or SWE35 for 12mm glass.

APS2 RECESSED POST(illustrated), or APE2. On 90° corners use APQ2 CORNER RECESSED POST.

AKS2 BRACKET, to support glass. Attach to AIA insert (press fit). For further detail of bracket attachment for situations, refer to "AKS attachment" pages in Chapter 5.

AIA INSERT supports glass by transferring weight down to base plate or substrate.

Note: Side rail height shall not be less than the minimum barrier height, as required in F4/AS1.

'VETRO' (VRE SIDE RAIL)

Refer elsewhere for corners, slopes and other situations not illustrated here.

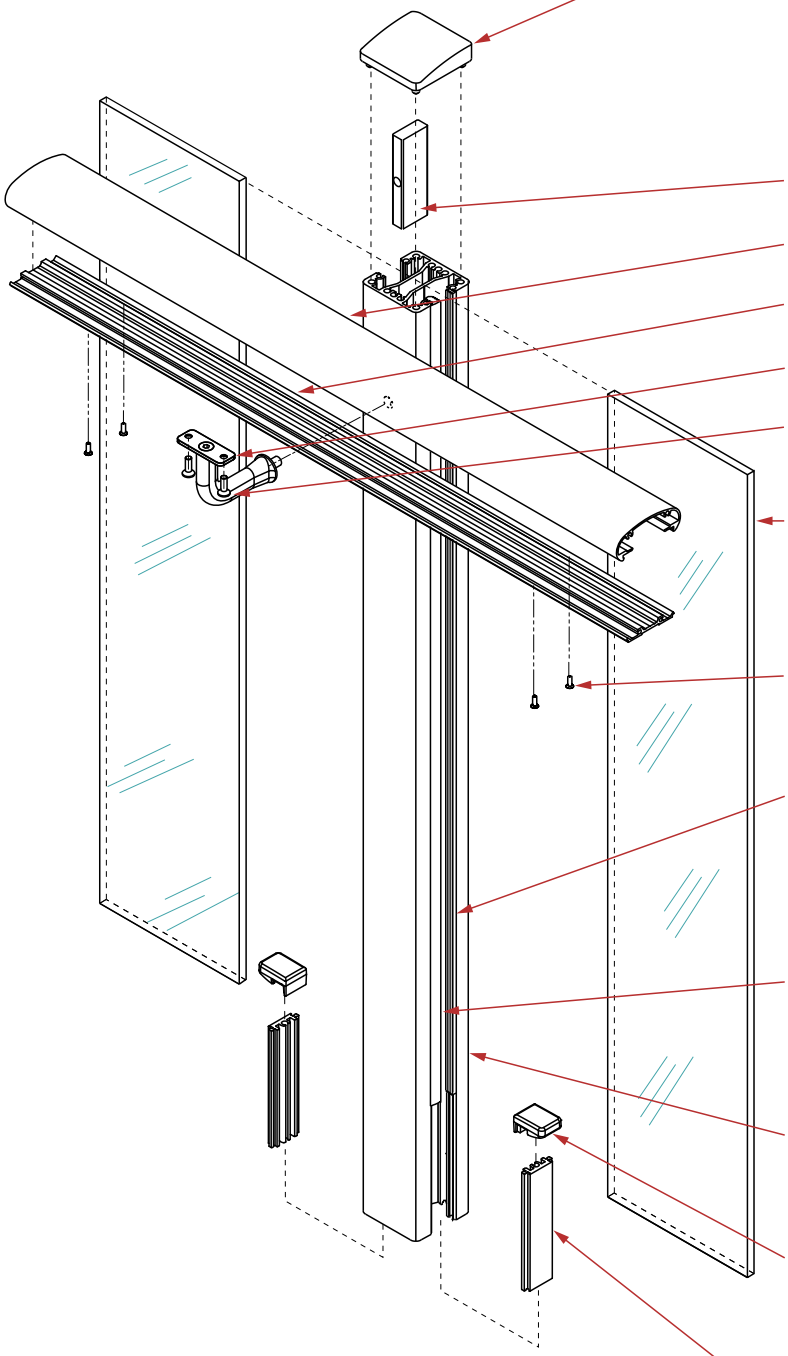

ACPR POST CAP (Illustrated) for 50 x 50 post, or ACPE for 50 x 60 post. Alternatively, use ACEFS as flat blank for 50 x 60 APE2 post or ACFFS on 50 x 50 APS post. Push fit to top of post after installation of glass. Secure to posts with a small amount of silicon or adhesive on the prongs.

POST INSERT (part of LBWN8 bracket)

VRE TOP RAIL

DRH INNER SIDE RAIL

LBWN BRACKETS WITH FIXINGS

FV10-19TR.T1 SELF TAPPER SCREWS Drill size in DRH = Ø4.1mm

TOUGHENED GLASS PANELS of appropriate thickness, refer to the Style Specification. All exposed edges to be Flat Polished.

FS4-4B RIVETS. 1 pair at 1000mm maximum centres between. Drill size = Ø3.3mm.

SRG40 RETAINED GASKET to the outer face of glass 10mm or 12mm glass. SRG70 RETAINED GASKET used for 8mm glass. Must be slid into post prior to assembly.

WEDGE GASKET to the inner face of glass, either SWE50 (with SRG70 RETAINED GASKET) for 8mm glass, SWE55 for 10mm glass, or SWE35 for 12mm glass.

APS2 RECESSED POST(illustrated), or APE2. On 90° corners use APQ2 CORNER RECESSED POST.

AKS2 BRACKET, to support glass. Attach to AIA insert (press fit). For further detail of bracket attachment for situations, refer to "AKS attachment" pages in Chapter 5.

AIA INSERT supports glass by transferring weight down to base plate or substrate.

Note: Side rail height shall not be less than the minimum barrier height, as required in F4/AS1.

'VETRO' (VRR SIDE RAIL)

Refer elsewhere for corners, slopes and other situations not illustrated here.

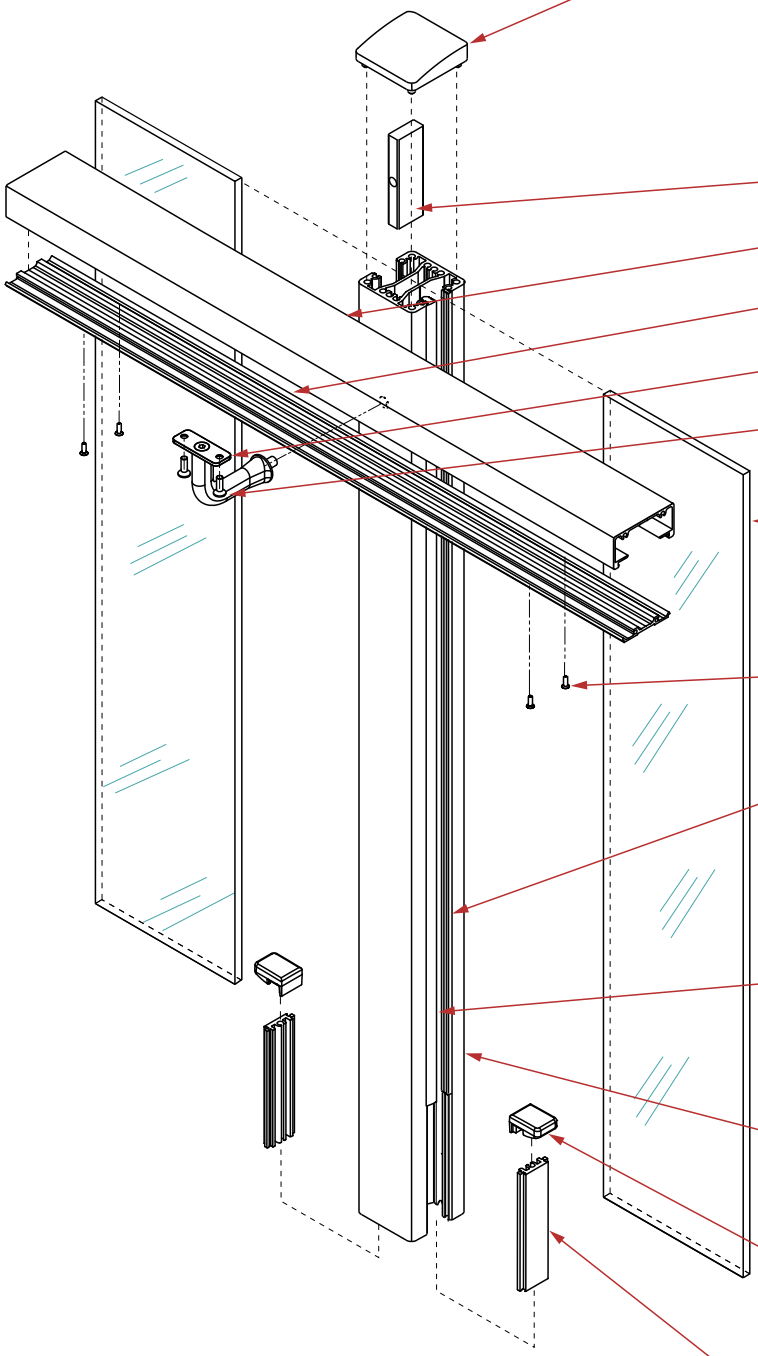

ACPR POST CAP (Illustrated) for 50 x 50 post, or ACPE for 50 x 60 post. Alternatively, use ACEFS as flat blank for 50 x 60 APE2 post or ACFFS on 50 x 50 APS post. Push fit to top of post after installation of glass. Secure to posts with a small amount of silicon or adhesive on the prongs.

POST INSERT (part of LBWN8 bracket)

VRR TOP RAIL

DRH INNER SIDE RAIL

LBWN BRACKETS WITH FIXINGS

FV10-19TR.T1 SELF TAPPER SCREWS Drill size in DRH = Ø4.1mm

TOUGHENED GLASS PANELS of appropriate thickness, refer to the Style Specification. All exposed edges to be Flat Polished.

FS4-4B RIVETS. 1 pair at 1000mm maximum centres between. Drill size = Ø3.3mm.

SRG40 RETAINED GASKET to the outer face of glass 10mm or 12mm glass. SRG70 RETAINED GASKET used for 8mm glass. Must be slid into post prior to assembly.

WEDGE GASKET to the inner face of glass, either SWE50 (with SRG70 RETAINED GASKET) for 8mm glass, SWE55 for 10mm glass, or SWE35 for 12mm glass.

APS2 RECESSED POST(illustrated), or APE2. On 90° corners use APQ2 CORNER RECESSED POST.

AKS2 BRACKET, to support glass. Attach to AIA insert (press fit). For further detail of bracket attachment for situations, refer to "AKS attachment" pages in Chapter 5.

AIA INSERT supports glass by transferring weight down to base plate or substrate.

Note: Side rail height shall not be less than the minimum barrier height, as required in F4/AS1.

'VETRO' (VRT SIDE RAIL)

Refer elsewhere for corners, slopes and other situations not illustrated here.

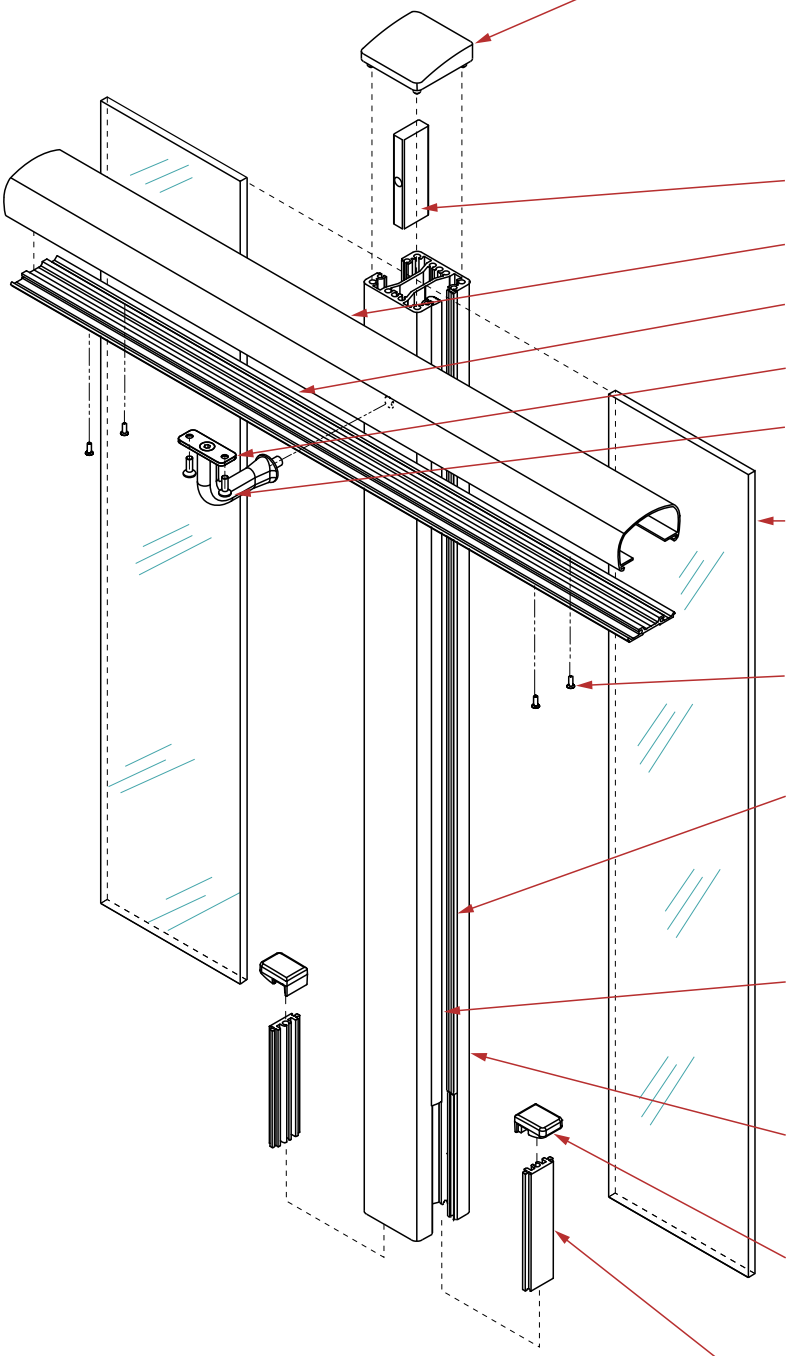

ACPR POST CAP (Illustrated) for 50 x 50 post, or ACPE for 50 x 60 post. Alternatively, use ACEFS as flat blank for 50 x 60 APE2 post or ACFFS on 50 x 50 APS post. Push fit to top of post after installation of glass. Secure to posts with a small amount of silicon or adhesive on the prongs.

POST INSERT (part of LBWN8 bracket)

VRT TOP RAIL

DRH INNER SIDE RAIL

LBWN BRACKETS WITH FIXINGS

FV10-19TR.T1 SELF TAPPER SCREWS Drill size in DRH = Ø4.1mm

TOUGHENED GLASS PANELS of appropriate thickness, refer to the Style Specification. All exposed edges to be Flat Polished.

FS4-4B RIVETS. 1 pair at 1000mm maximum centres between. Drill size = Ø3.3mm.

SRG40 RETAINED GASKET to the outer face of glass 10mm or 12mm glass. SRG70 RETAINED GASKET used for 8mm glass. Must be slid into post prior to assembly.

WEDGE GASKET to the inner face of glass, either SWE50 (with SRG70 RETAINED GASKET) for 8mm glass, SWE55 for 10mm glass, or SWE35 for 12mm glass.

APS2 RECESSED POST(illustrated), or APE2. On 90° corners use APQ2 CORNER RECESSED POST.

AKS2 BRACKET, to support glass. Attach to AIA insert (press fit). For further detail of bracket attachment for situations, refer to "AKS attachment" pages in Chapter 5.

AIA INSERT supports glass by transferring weight down to base plate or substrate.

Note: Side rail height shall not be less than the minimum barrier height, as required in F4/AS1.

'VETRO' (LRR SIDE RAIL)

Refer elsewhere for corners, slopes and other situations not illustrated here.

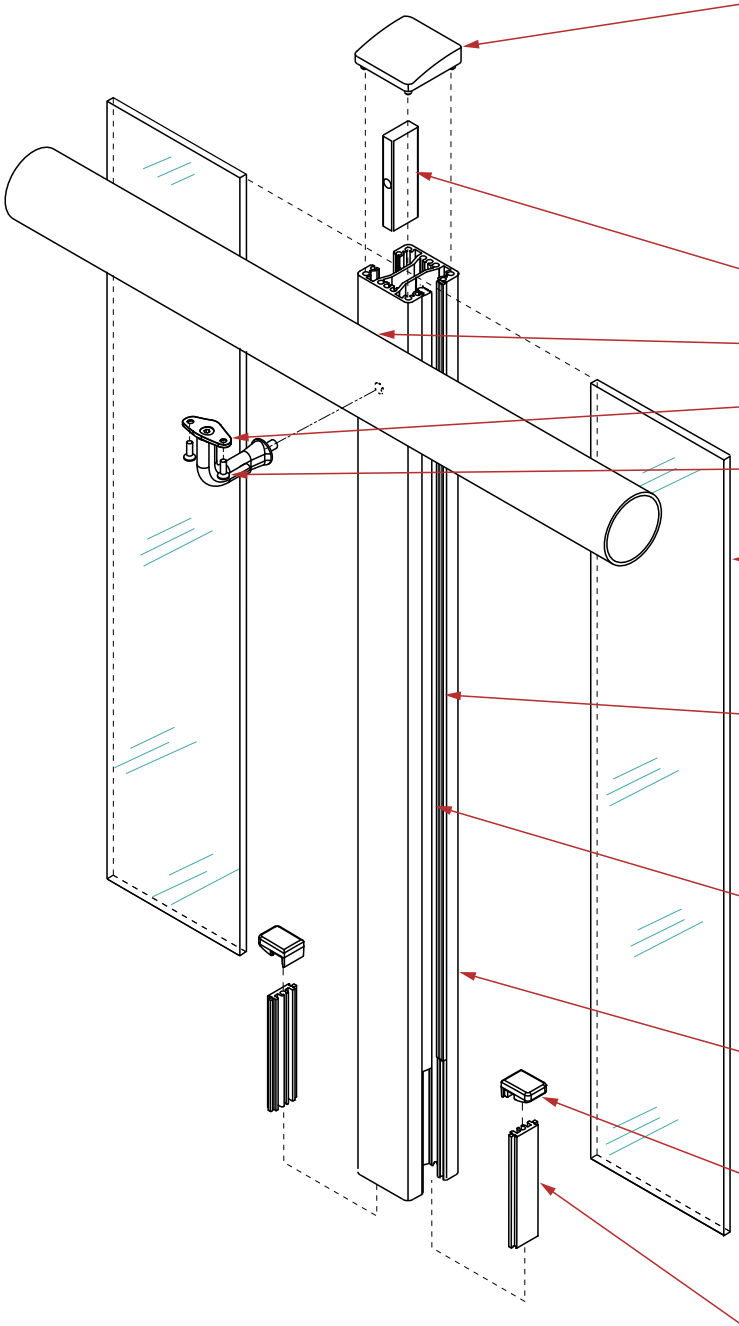

ACPR POST CAP (Illustrated) for 50 x 50 post, or ACPE for 50 x 60 post. Alternatively, use ACEFS as flat blank for 50 x 60 APE2 post or ACFFS on 50 x 50 APS post. Push fit to top of post after installation of glass. Secure to posts with a small amount of silicon or adhesive on the prongs.

POST INSERT (part of LRWN8 bracket)

LRR TOP RAIL

LRWN8 BRACKETS AND FIXINGS

FV10-19TR.T1 SELF TAPPER SCREWS Drill size in DRH = Ø4.1mm

TOUGHENED GLASS PANELS of appropriate thickness, refer to the Style Specification. All exposed edges to be Flat Polished.

SRG40 RETAINED GASKET to the outer face of glass 10mm or 12mm glass. SRG70 RETAINED GASKET used for 8mm glass. Must be slid into post prior to assembly.

WEDGE GASKET to the inner face of glass, either SWE50 (with SRG70 RETAINED GASKET) for 8mm glass, SWE55 for 10mm glass, or SWE35 for 12mm glass.

APS2 RECESSED POST(illustrated), or APE2. On 90° corners use APQ2 CORNER RECESSED POST.

AKS2 BRACKET, to support glass. Attach to AIA insert (press fit). For further detail of bracket attachment for situations, refer to "AKS attachment" pages in Chapter 5.

AIA INSERT supports glass by transferring weight down to base plate or substrate.

Note: Side rail height shall not be less than the minimum barrier height, as required in F4/AS1.

'SURREAL' (NO RAIL)

Refer elsewhere for corners, slopes and other situations not illustrated here.

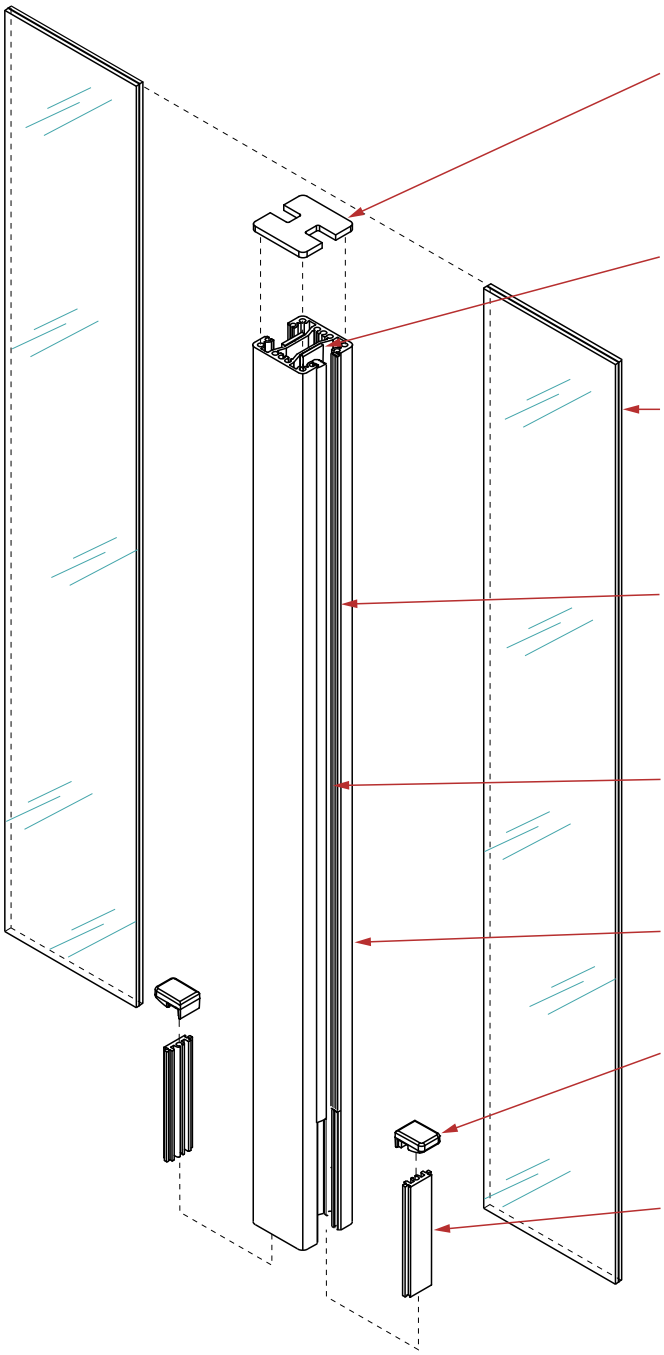

ACFI POST CAP (typical, but refer to Chapter 1 for options), push fit to top of Post after installation of glass. Secure to posts with a small amount of silicon or adhesive on the prongs.

STRUCTURAL GLAZING: Both the vertical edges of the glass shall attach to the post with structural TASD-795 silicone sealant, for the full height and thickness of the glass.

EVA TOUGHENED LAMINATED GLASS, of appropriate thickness, depending on the post spacing. Refer to Style Specification. Exposed horizontal edges to be flat polished.

SRG40 RETAINED GASKET to the outer face of glass 10mm or 12mm glass. SRG70 RETAINED GASKET used for 8mm glass. Must be slid into post prior to assembly.

WEDGE GASKET to the inner face of glass, either SWE50 (with SRG70 RETAINED GASKET) for 8mm glass, SWE55 for 10mm glass, or SWE35 for 12mm glass.

APS2 (illustrated) or APE2 RECESSED POST. On 90° corners use APQ2 CORNER RECESSED POST.

AKS2 BRACKET, to support glass. Attach to AIA insert (press fit). For further detail of bracket attachment for situations, refer to "AKS attachment" pages in Chapter 5.

AIA INSERT for supporting glass by transferring weight down to base plate or substrate.

'SURREAL' (ART SIDE RAIL)

Refer elsewhere for corners, slopes and other situations not illustrated here.

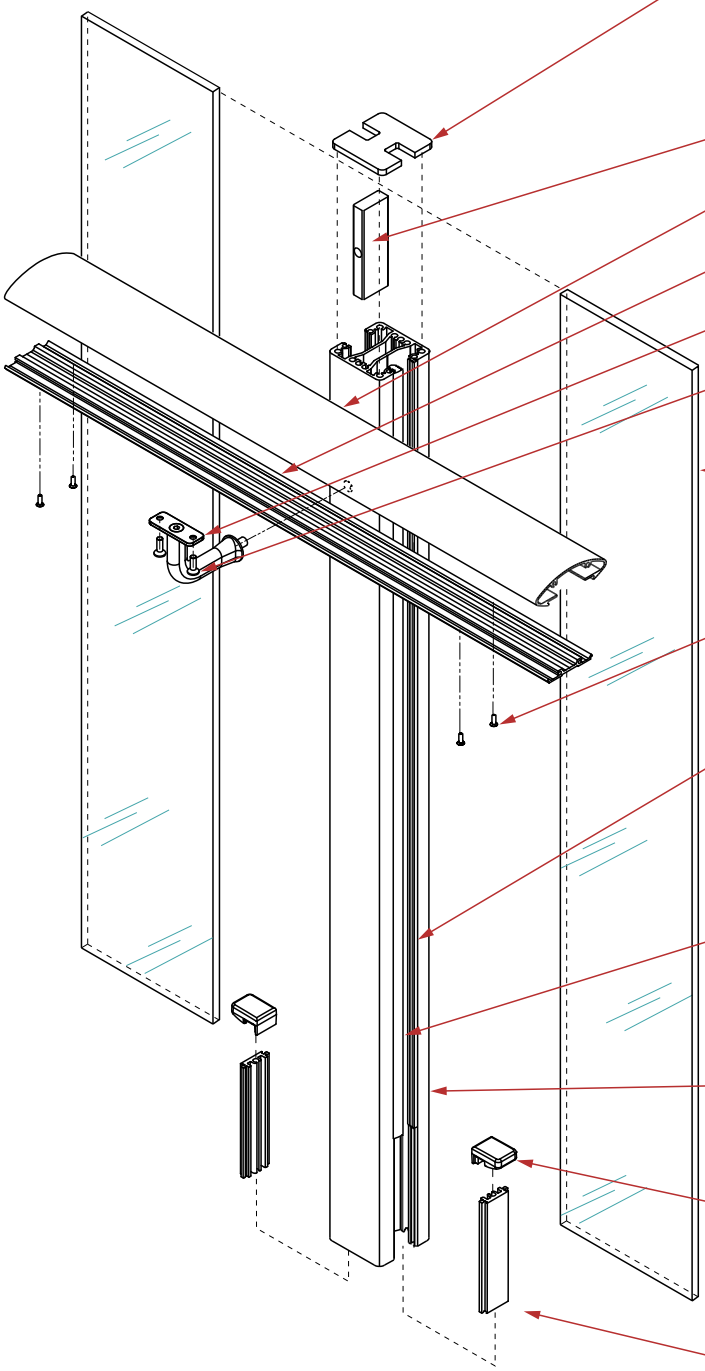

ACFI POST CAP (typical, but refer to Chapter 1 for options), push fit to top of Post after installation of glass. Secure to posts with a small amount of silicon or adhesive on the prongs.

POST INSERT (part of LBWN8 bracket)

ART SIDE RAIL

DRH INNER SIDE RAIL

LBWN8 BRACKETS AND FIXINGS

FV10-19TR.T1 SELF TAPPER SCREWS Drill size in DRH = Ø4.1mm

TOUGHENED GLASS PANELS of appropriate thickness, refer to the Style Specification. All exposed edges to be Flat Polished.

FS4-4B RIVETS. 1 pair at 1000mm maximum centres between. Drill size = Ø3.3mm.

SRG40 RETAINED GASKET to the outer face of glass 10mm or 12mm glass. SRG70 RETAINED GASKET used for 8mm glass. Must be slid into post prior to assembly.

WEDGE GASKET to the inner face of glass, either SWE50 (with SRG70 RETAINED GASKET) for 8mm glass, SWE55 for 10mm glass, or SWE35 for 12mm glass.

APS2 RECESSED POST(illustrated), or APE2. On 90° corners use APQ2 CORNER RECESSED POST.

AKS2 BRACKET, to support glass. Attach to AIA insert (press fit). For further detail of bracket attachment for situations, refer to "AKS attachment" pages in Chapter 5.

AIA INSERT for supporting glass by transferring weight down to base plate or substrate.

Note: Side rail height shall not be less than the minimum barrier height, as required in F4/AS1.

'SURREAL' (PRR SIDE RAIL)

Refer elsewhere for corners, slopes and other situations not illustrated here.

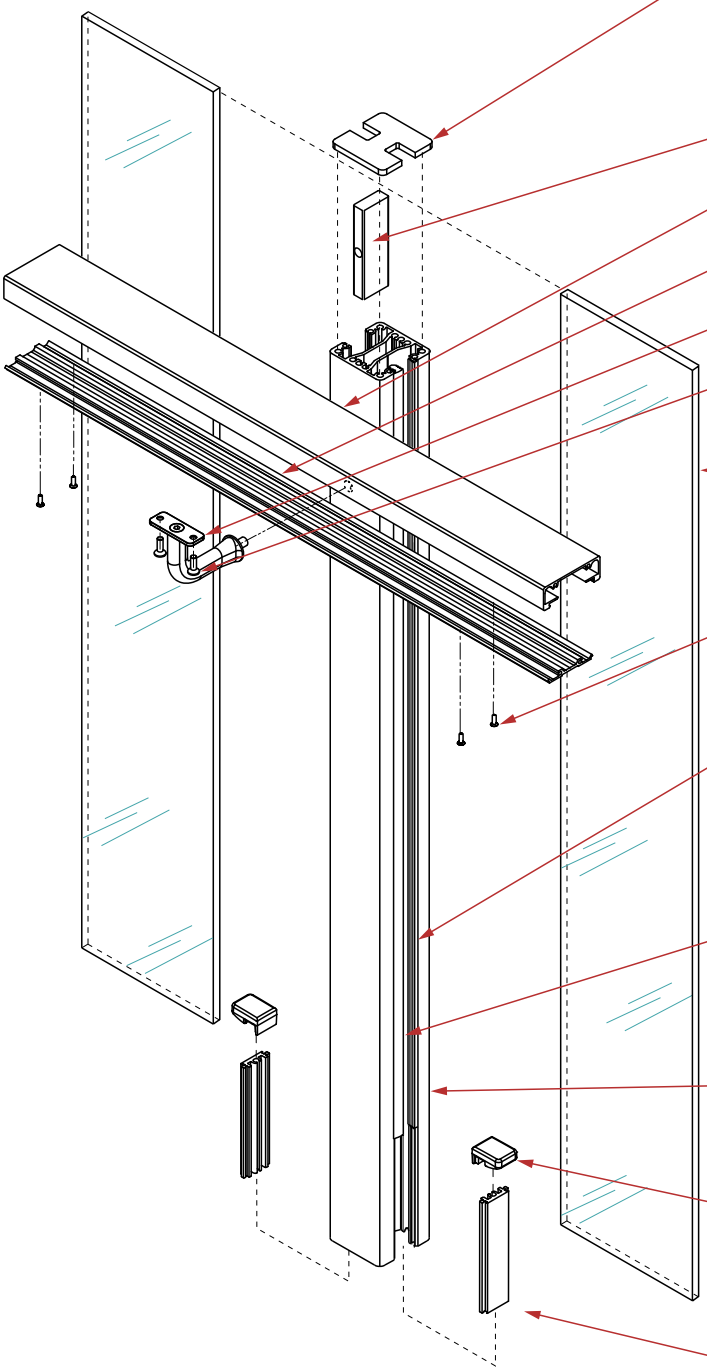

ACFI POST CAP (typical, but refer to Chapter 1 for options), push fit to top of Post after installation of glass. Secure to posts with a small amount of silicon or adhesive on the prongs.

POST INSERT (part of LBWN8 bracket)

PRR SIDE RAIL

DRH INNER SIDE RAIL

LBWN8 BRACKETS AND FIXINGS

FV10-19TR.T1 SELF TAPPER SCREWS Drill size in DRH = Ø4.1mm

TOUGHENED GLASS PANELS of appropriate thickness, refer to the Style Specification. All exposed edges to be Flat Polished.

FS4-4B RIVETS. 1 pair at 1000mm maximum centres between. Drill size = Ø3.3mm.

SRG40 RETAINED GASKET to the outer face of glass 10mm or 12mm glass. SRG70 RETAINED GASKET used for 8mm glass. Must be slid into post prior to assembly.

WEDGE GASKET to the inner face of glass, either SWE50 (with SRG70 RETAINED GASKET) for 8mm glass, SWE55 for 10mm glass, or SWE35 for 12mm glass.

APS2 RECESSED POST(illustrated), or APE2. On 90° corners use APQ2 CORNER RECESSED POST.

AKS2 BRACKET, to support glass. Attach to AIA insert (press fit). For further detail of bracket attachment for situations, refer to "AKS attachment" pages in Chapter 5.

AIA INSERT for supporting glass by transferring weight down to base plate or substrate.

Note: Side rail height shall not be less than the minimum barrier height, as required in F4/AS1.

'SURREAL' (VRE SIDE RAIL)

Refer elsewhere for corners, slopes and other situations not illustrated here.

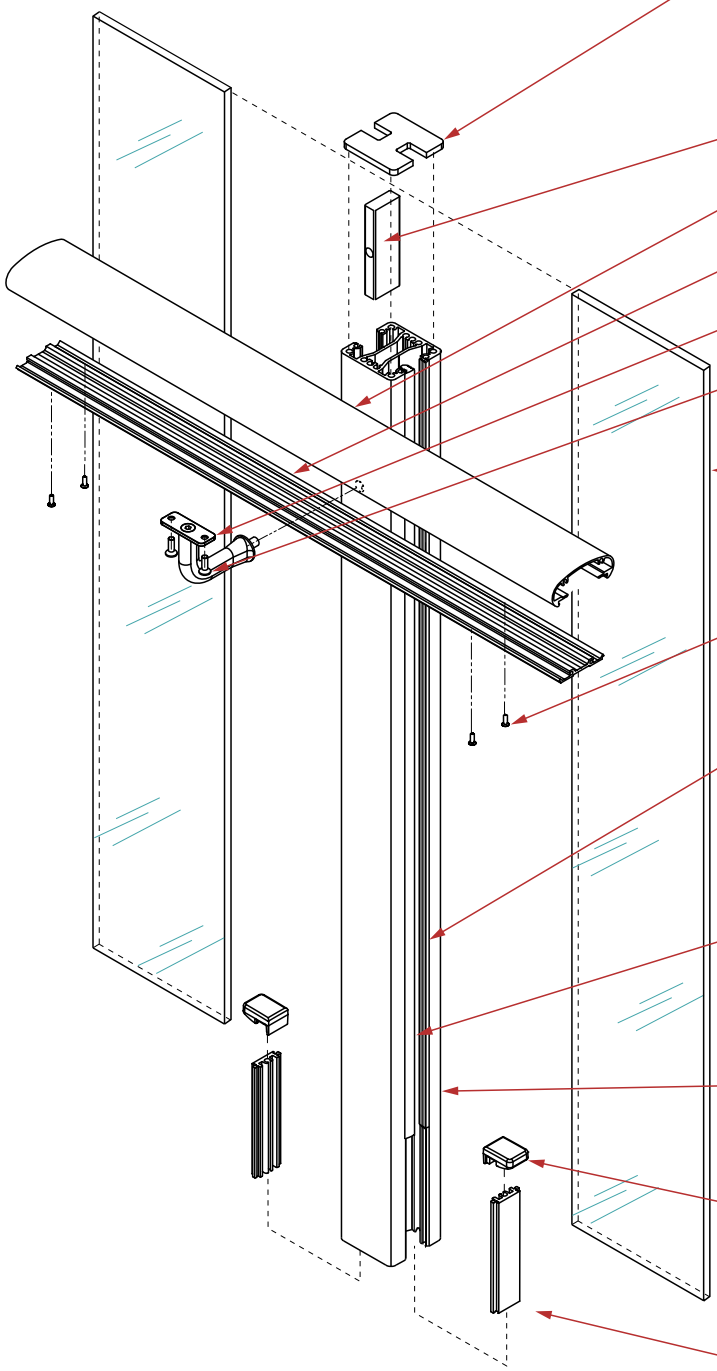

ACFI POST CAP (typical, but refer to Chapter 1 for options), push fit to top of Post after installation of glass. Secure to posts with a small amount of silicon or adhesive on the prongs.

POST INSERT (part of LBWN8 bracket)

VRE SIDE RAIL

DRH INNER SIDE RAIL

LBWN8 BRACKETS AND FIXINGS

FV10-19TR.T1 SELF TAPPER SCREWS Drill size in DRH = Ø4.1mm

TOUGHENED GLASS PANELS of appropriate thickness, refer to the Style Specification. All exposed edges to be Flat Polished.

FS4-4B RIVETS. 1 pair at 1000mm maximum centres between. Drill size = Ø3.3mm.

SRG40 RETAINED GASKET to the outer face of glass 10mm or 12mm glass. SRG70 RETAINED GASKET used for 8mm glass. Must be slid into post prior to assembly.

WEDGE GASKET to the inner face of glass, either SWE50 (with SRG70 RETAINED GASKET) for 8mm glass, SWE55 for 10mm glass, or SWE35 for 12mm glass.

APS2 RECESSED POST(illustrated), or APE2. On 90° corners use APQ2 CORNER RECESSED POST.

AKS2 BRACKET, to support glass. Attach to AIA insert (press fit). For further detail of bracket attachment for situations, refer to "AKS attachment" pages in Chapter 5.

AIA INSERT for supporting glass by transferring weight down to base plate or substrate.

Note: Side rail height shall not be less than the minimum barrier height, as required in F4/AS1.

'SURREAL' (VRR SIDE RAIL)

Refer elsewhere for corners, slopes and other situations not illustrated here.

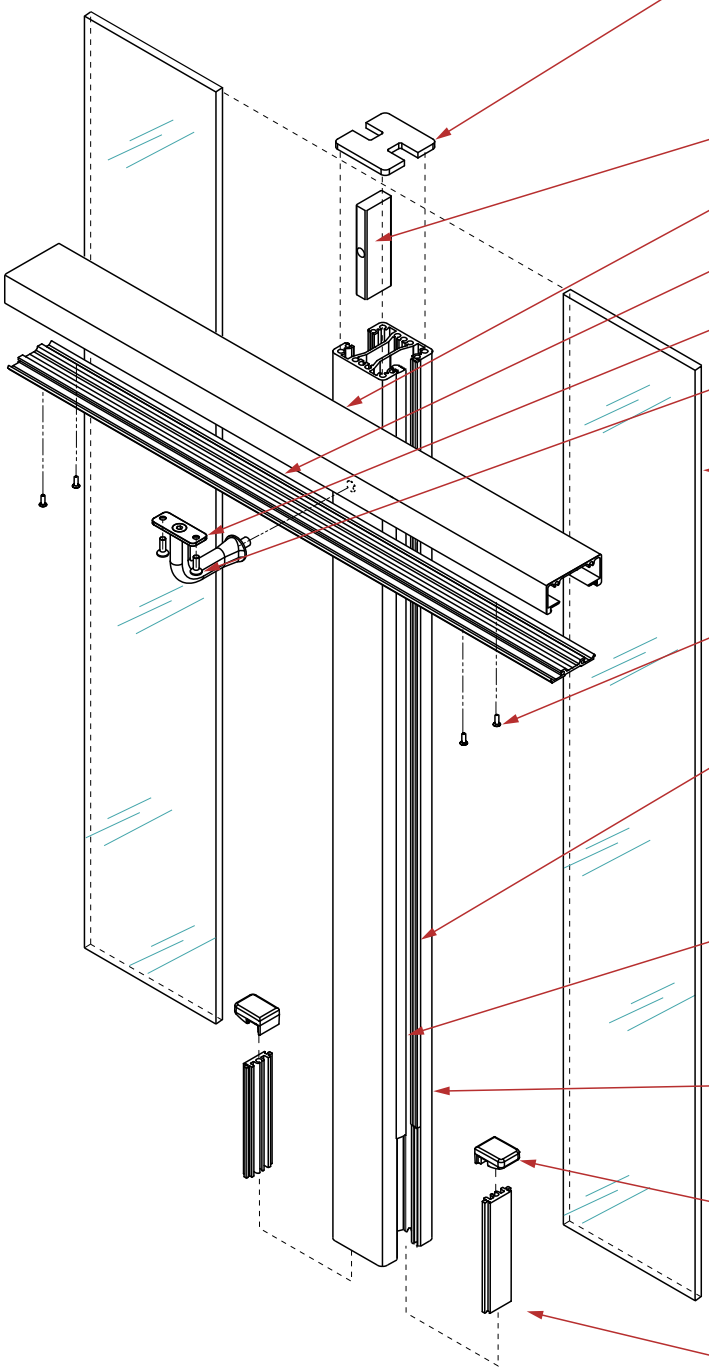

ACFI POST CAP (typical, but refer to Chapter 1 for options), push fit to top of Post after installation of glass. Secure to posts with a small amount of silicon or adhesive on the prongs.

POST INSERT (part of LBWN8 bracket)

VRR SIDE RAIL

DRH INNER SIDE RAIL

LBWN8 BRACKETS AND FIXINGS

FV10-19TR.T1 SELF TAPPER SCREWS Drill size in DRH = Ø4.1mm

TOUGHENED GLASS PANELS of appropriate thickness, refer to the Style Specification. All exposed edges to be Flat Polished.

FS4-4B RIVETS. 1 pair at 1000mm maximum centres between. Drill size = Ø3.3mm.

SRG40 RETAINED GASKET to the outer face of glass 10mm or 12mm glass. SRG70 RETAINED GASKET used for 8mm glass. Must be slid into post prior to assembly.

WEDGE GASKET to the inner face of glass, either SWE50 (with SRG70 RETAINED GASKET) for 8mm glass, SWE55 for 10mm glass, or SWE35 for 12mm glass.

APS2 RECESSED POST(illustrated), or APE2. On 90° corners use APQ2 CORNER RECESSED POST.

AKS2 BRACKET, to support glass. Attach to AIA insert (press fit). For further detail of bracket attachment for situations, refer to "AKS attachment" pages in Chapter 5.

AIA INSERT for supporting glass by transferring weight down to base plate or substrate.

Note: Side rail height shall not be less than the minimum barrier height, as required in F4/AS1.

'SURREAL' (VRT SIDE RAIL)

Refer elsewhere for corners, slopes and other situations not illustrated here.

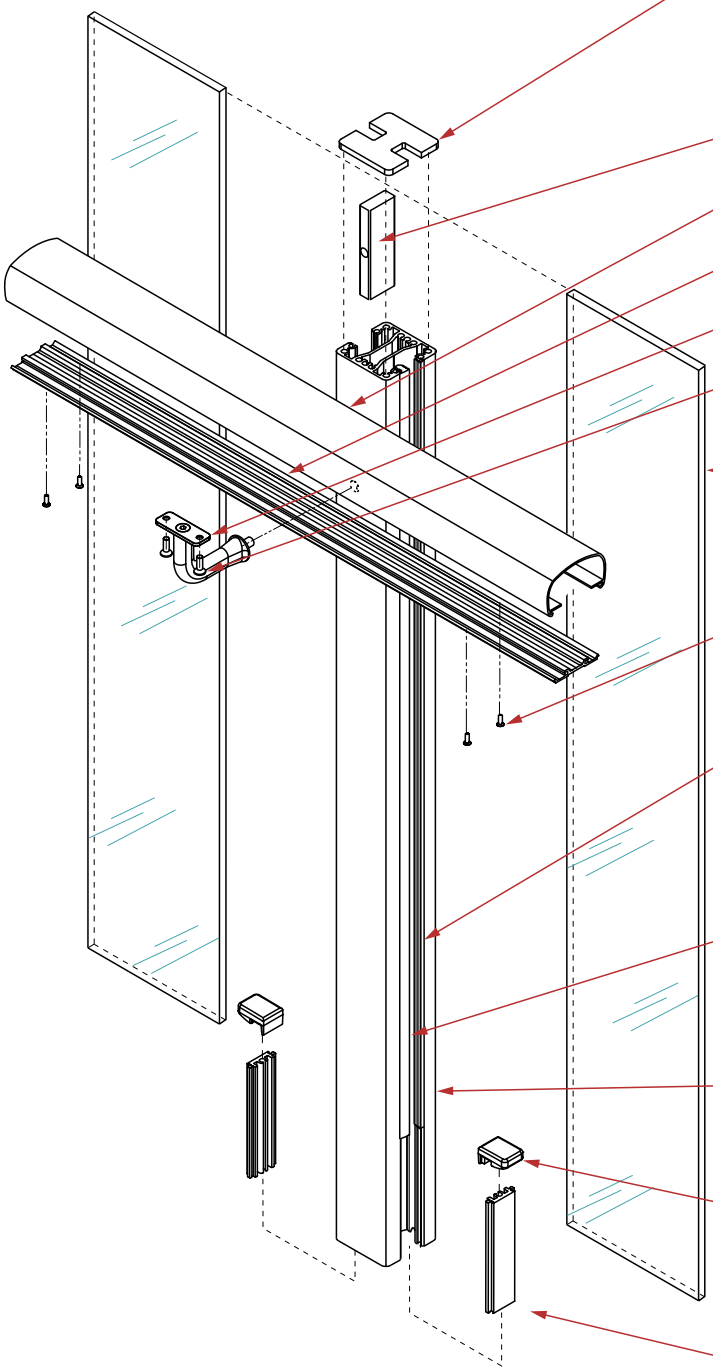

ACFI POST CAP (typical, but refer to Chapter 1 for options), push fit to top of Post after installation of glass. Secure to posts with a small amount of silicon or adhesive on the prongs.

POST INSERT (part of LBWN8 bracket)

VRT SIDE RAIL

DRH INNER SIDE RAIL

LBWN8 BRACKETS AND FIXINGS

FV10-19TR.T1 SELF TAPPER SCREWS Drill size in DRH = Ø4.1mm

TOUGHENED GLASS PANELS of appropriate thickness, refer to the Style Specification. All exposed edges to be Flat Polished.

FS4-4B RIVETS. 1 pair at 1000mm maximum centres between. Drill size = Ø3.3mm.

SRG40 RETAINED GASKET to the outer face of glass 10mm or 12mm glass. SRG70 RETAINED GASKET used for 8mm glass. Must be slid into post prior to assembly.

WEDGE GASKET to the inner face of glass, either SWE50 (with SRG70 RETAINED GASKET) for 8mm glass, SWE55 for 10mm glass, or SWE35 for 12mm glass.

APS2 RECESSED POST(illustrated), or APE2. On 90° corners use APQ2 CORNER RECESSED POST.

AKS2 BRACKET, to support glass. Attach to AIA insert (press fit). For further detail of bracket attachment for situations, refer to "AKS attachment" pages in Chapter 5.

AIA INSERT for supporting glass by transferring weight down to base plate or substrate.

Note: Side rail height shall not be less than the minimum barrier height, as required in F4/AS1.

'SURREAL' (LRR SIDE RAIL)

Refer elsewhere for corners, slopes and other situations not illustrated here.

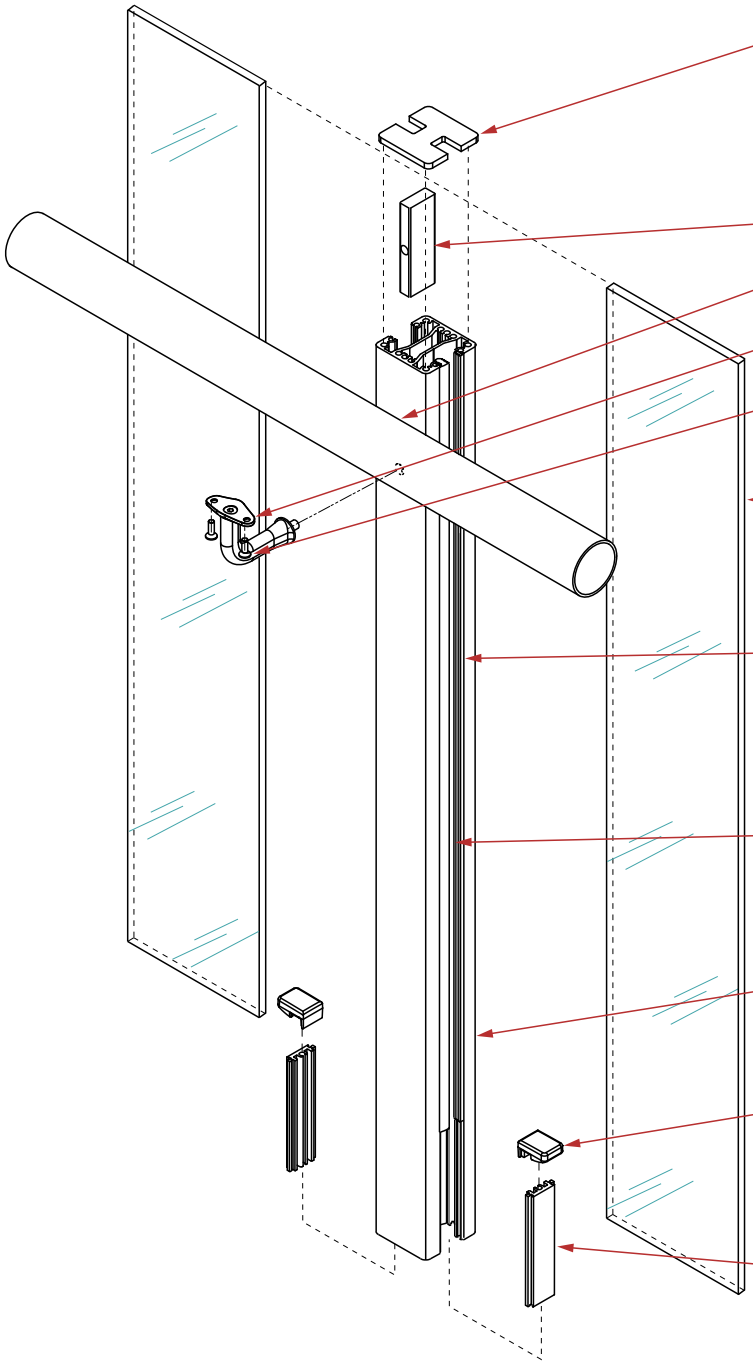

ACFI POST CAP (typical, but refer to Chapter 1 for options), push fit to top of Post after installation of glass. Secure to posts with a small amount of silicon or adhesive on the prongs.

POST INSERT (part of LRWN8 bracket)

LRR SIDE RAIL

LRWN8 BRACKETS AND FIXINGS

FV10-19TR.T1 SELF TAPPER SCREWS Drill size in DRH = Ø4.1mm

TOUGHENED GLASS PANELS of appropriate thickness, refer to the Style Specification. All exposed edges to be Flat Polished.

SRG40 RETAINED GASKET to the outer face of glass 10mm or 12mm glass. SRG70 RETAINED GASKET used for 8mm glass. Must be slid into post prior to assembly.

WEDGE GASKET to the inner face of glass, either SWE50 (with SRG70 RETAINED GASKET) for 8mm glass, SWE55 for 10mm glass, or SWE35 for 12mm glass.

APS2 RECESSED POST(illustrated), or APE2. On 90° corners use APQ2 CORNER RECESSED POST.

AKS2 BRACKET, to support glass. Attach to AIA insert (press fit). For further detail of bracket attachment for situations, refer to "AKS attachment" pages in Chapter 5.

AIA INSERT for supporting glass by transferring weight down to base plate or substrate.

Note: Side rail height shall not be less than the minimum barrier height, as required in F4/AS1.

CHAPTER 5 - SEMI-FRAMELESS GLASS FABRICATION & INSTALLATION

Site measuring - General guide pg110-111

VD.35.00 'Vetro' (No Rail) - Vertical Dimensions pg112
VD.35.05S 'Vetro' (ART Side Rail) - Vertical Dimensions pg113
VD.35.06S 'Vetro' (PRR Side Rail) - Vertical Dimensions pg114
VD.35.08S 'Vetro' (VRE Side Rail) - Vertical Dimensions pg115
VD.35.12S 'Vetro' (VRR Side Rail) - Vertical Dimensions pg116
VD.35.04S 'Vetro' (VRT Side Rail) - Vertical Dimensions pg117
VD.35.13S 'Vetro' (LRR Side Rail) - Vertical Dimensions pg118

VD.36.00 'Surreal' (No Rail) - Vertical Dimensions pg119
VD.36.05S 'Surreal' (ART Side Rail) - Vertical Dimensions pg120
VD.36.06S 'Surreal' (PRR Side Rail) - Vertical Dimensions pg121
VD.36.08S 'Surreal' (VRE Side Rail) - Vertical Dimensions pg122
VD.36.12S 'Surreal' (VRR Side Rail) - Vertical Dimensions pg123
VD.36.04S 'Surreal' (VRT Side Rail) - Vertical Dimensions pg124
VD.36.14S 'Surreal' (LRS Side Rail) - Vertical Dimensions pg125

Durability pg126-127
AKS2 Attachment to recessed posts : TOP mounted situation pg128
AKS2 Attachment to recessed posts : SIDE mounted situation pg129
AKSV Attachment to recessed posts : STAIR TOP mounted situation pg130
Baseplate-to-Post connections and post drainage pg131
Side-fixed post connections and post drainage pg132
Side mounting using DKG2 gutter brackets pg133

Corners - General methods pg134

Epoxy-set anchor studs - Installation Specification pg135
Fabrication guide for Semi-frameless Balustrade styles pg136-138
Installation guide for 'Vetro' & 'Surreal' style balustrades pg139-141

UNEX Loading Clasification pg142

SITE MEASURING - GENERAL GUIDE

The following guide applies specifically to site measuring which should show the 4 types of information described below, plus any other relevant data.

1. PLAN DIMENSIONS

To manufacture a balustrade, the fabricator will need to accurately know the centreline length of the balustrade, and the angle between each run at all corners. Obtaining this centreline length can be achieved by two methods, i.e. "ON-SITE" METHOD, whereby the centreline length is obtained direct from measurements on site; and the "CALCULATION" METHOD, whereby the centreline length is calculated from the deck edge measurements and angles. Below are the procedures for each method. NOTE: the "CALCULATION" METHOD is recommended for all balustrades that are side fixed to the balcony.

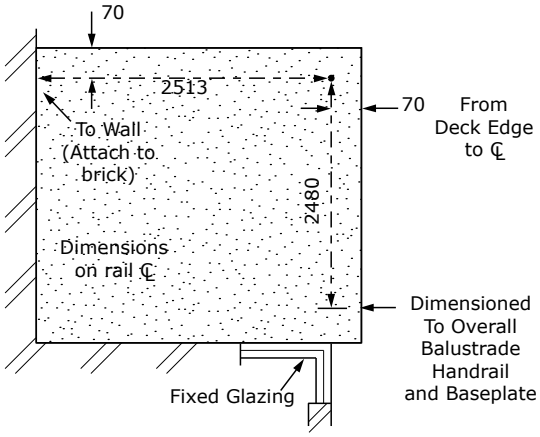

FIG. 1

(i) "ON-SITE" METHOD: It is essential when using this method that the fixing method and baseplate type etc have been finalised. The balustrade centreline can then be marked at an appropriate distance back from the deck edge, ensuring that the fixings will engage with structural joists and nogs on timber decks, or that the fixings will not be less than the minimum edge distance specified for concrete decks. A chalk-line can be useful for marking out the balustrade centreline on the deck. Once this is done, the balustrade centreline lengths can be measured and recorded on a layout plan, along with the angles at all intersection points.

The advantage of this method is that measurements are directly available for the balustrade manufacture, without the need of further calculations, and therefore reducing risk of error etc.

(ii) "CALCULATION" METHOD: Measure and record the length of all deck edges which require balustrades, along with Substrate Details as described on Page 111.

Once the fixing method and baseplate type has been finalised, the balustrade centreline "setback" dimension can also be finalised (i.e. the distance the balustrade centreline is set back from the deck edge). Consequent to this, the balustrade centreline length can be calculated.

Where the deck angles are 90 degrees, this can be done by adding or subtracting the set-backs at each end of the run from the deck edge dimension. For other deck angles, a full size or scale drawing may be required to determine the amount to be added or subtracted to each end. This method of site measuring will need to be used for side fixed balustrades.

At ends, carefully record all relevant details, such as: where measurements are to, the presence of doors or windows etc. Figure 1 shows a typical layout plan and dimensions.

(continued on following Page)

SITE MEASURING - GENERAL GUIDE - (CONT'D)

2. SUBSTRATE DETAILS

These describe the building structure at all points to which the balustrade attaches. Generally the best presentation of deck structure is given by dimensioned cross-sections of the deck edges; See Figure 2 for a typical cross-section.

Where attaching to walls or columns, ensure adequate solid fixing is available. Check these surfaces for plumb, and record any discrepancy.

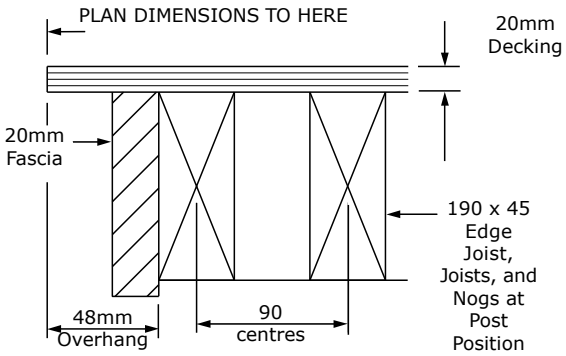

FIG. 2

3. CORNER ANGLES

On the layout plan, record the angles of all the corners. Measure these angles using an electronic protractor or similar.

If such an instrument is not available the angle can be determined by measuring a fixed amount (say 500mm) from the corner along both deck edges, marking these points and measuring the distance between them. By recording all three dimensions, the deck angle can then be accurately reproduced in the factory when fabricating the balustrade. Figure 3 shows various methods of recording the corner angle measurements.

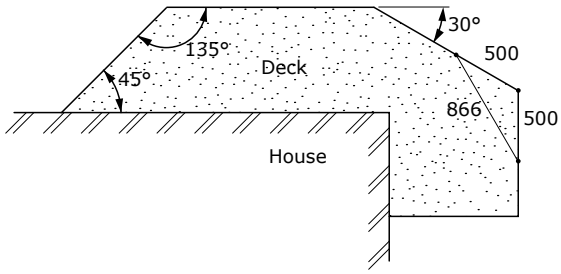

FIG. 3

4. CHANGES IN LEVEL

Note and record all changes in level.
(i) MAJOR CHANGES, e.g.-Steps or ramps.
(ii) MINOR CHANGES, e.g.-due to fall, sag in the deck or to general unevenness. These should be allowed for by varying each post length to obtain a straight and level top rail with the minimum specified rail height at the highest point in the deck. This generally necessitates a check on the deck level at every post position, as apparently flat decks can have significant variations in level.
The relative level of different post positions on the deck can be determined with a builders level and staff. Ensure that the zero end of the staff is on the deck. By reading on the staff the distance from the deck to the line of sight of the instrument, and recording at each position, the required length of each post can be determined.

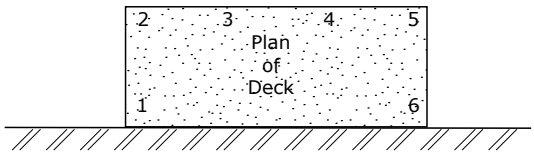

Point	Staff Reading
1	1500
2	1525
3	1520
4	1517
5	1522
6	1495

FIG. 4

The same procedure can be carried out using a laser level to provide the horizontal line of sight. It is convenient to identify each post position on the layout plan with a number, i.e. 1, 2, 3 etc, and show the staff readings in a table adjacent to each post reference. See Figure 4. In this example, Point 6 is the highest point on the deck, and Point 2 is the lowest, with a difference of 30mm.

'VETRO' (NO RAIL) - VERTICAL DIMENSIONS

'VETRO' (NO RAIL) - VERTICAL DIMENSIONS[1]					
DIMENSION		FORMULA	TYPICAL VALUES (mm)		
HEIGHT	(H)	As specified	1000	1100	1200
UNDERSPACE	(U)	As specified	88[2]	88[2]	88[2]
TOP EXTENSION	(TE)	As specified	2	2	2
POST HEIGHT	(PH)	H+TE-12mm	990	1090	1190
INSERT LENGTH LOWER	(ILL)	U-18mm	70	70	70
GLASS HEIGHT	(GH)	H-U	912	1012	1112

1. This table applies only with the use of the parts specified below. Post Heights apply only with 12mm thick baseplates for fixing to deck tops.
2. A nominal 88mm Underspace enables the Post Height to be increased by up to 12mm to suit deck level variations, without affecting Glass Height, or exceeding a 100mm Underspace.
3. Minor dimensions on the drawings have been rounded to the nearest millimetre.
4. Both the vertical edges of the glass shall fully attach to the post with structural silicone, for the full height and thickness of the glass.

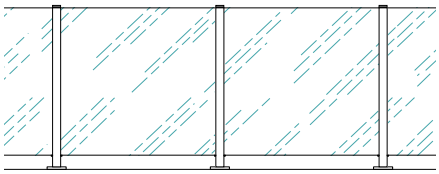

This is a guide for recommended cutting dimensions using the typical extrusions and components illustrated; use of others may require adjustments to the formula and dimensions given here.

REFER TO THE Assembly Specification FOR FURTHER DETAILS

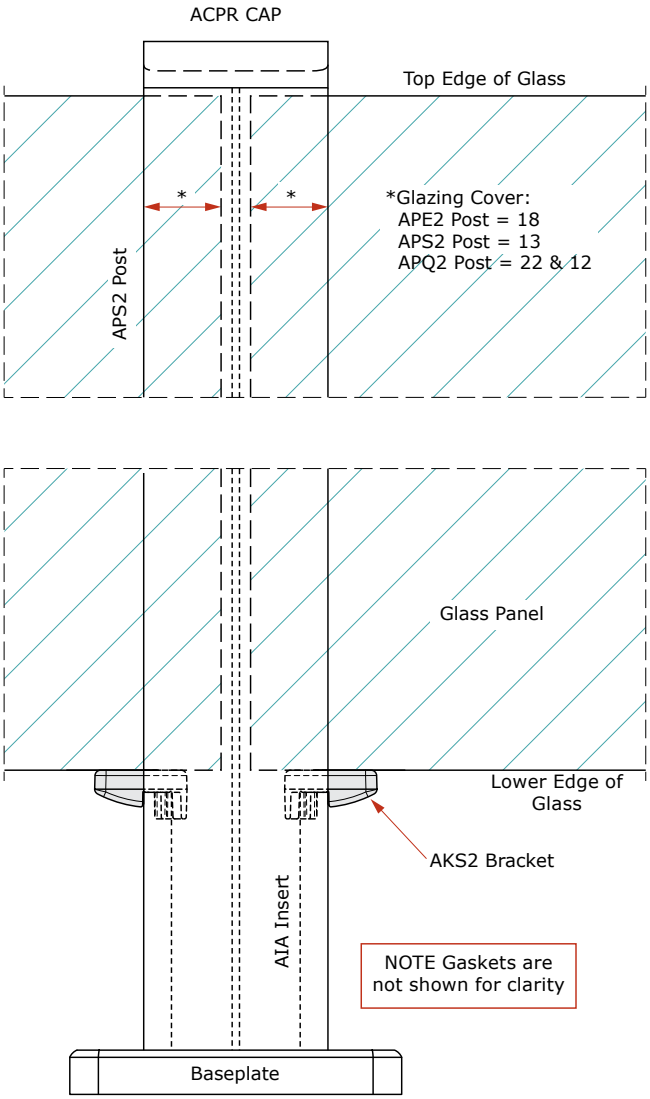

TYPICAL ELEVATION
APS2 Post Illustrated

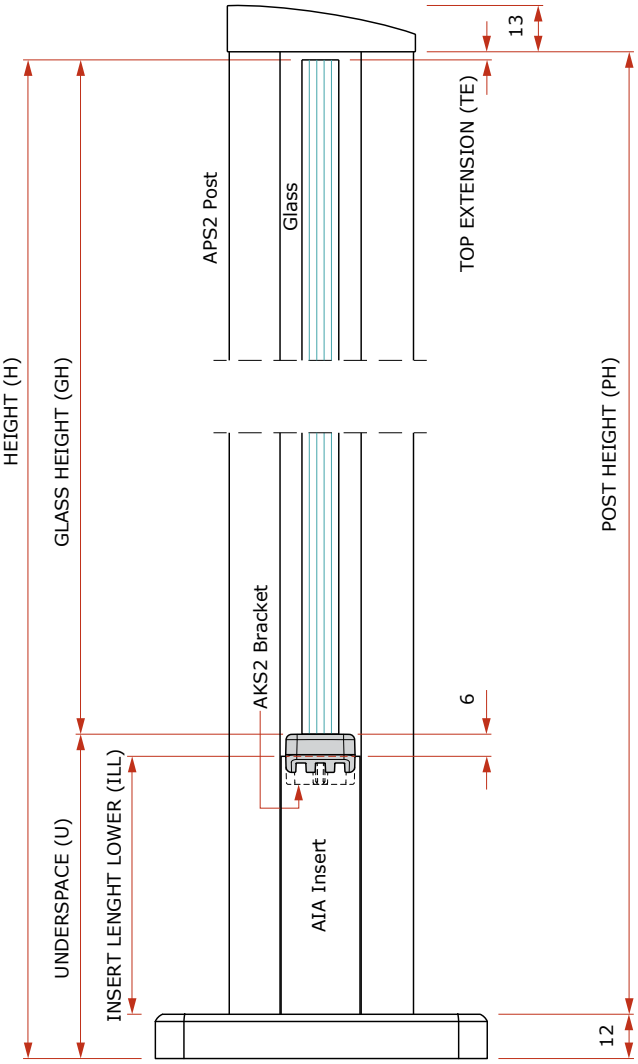

TYPICAL CROSS SECTION

UNEX ARCHITECTURAL BARRIERS
Specifications subject to change without notice
Phone 0800 333 777 | www.unex.co.nz

'VETRO' (ART SIDE RAIL) - VERTICAL DIMENSIONS

'VETRO' (ART SIDE RAIL) - VERTICAL DIMENSIONS[1]					
DIMENSION		FORMULA	TYPICAL VALUES (mm)		
HEIGHT	(H)	As specified	1000	1100	1200
UNDERSPACE	(U)	As specified	88[2]	88[2]	88[2]
TOP EXTENSION	(TE)	As specified	2	2	2
POST HEIGHT	(PH)	H+TE-12mm	990	1090	1190
INSERT LENGTH LOWER	(ILL)	U-18mm	70	70	70
HANDRAIL FIXING	(HF)	TE+80mm[4]	82	82	82
GLASS HEIGHT	(GH)	H-U	912	1012	1112

1. This table applies only with the use of the parts specified below. Post Heights apply only with 12mm thick baseplates for fixing to deck tops.
2. A nominal 88mm Underspace enables the Post Height to be increased by up to 12mm to suit deck level variations, without affecting Glass Height, or exceeding a 100mm Underspace.
3. Minor dimensions on the drawings have been rounded to the nearest millimetre.
4. These Vertical Dimensions are based on the top of the handrail being horizontally aligned with the top of the glass.

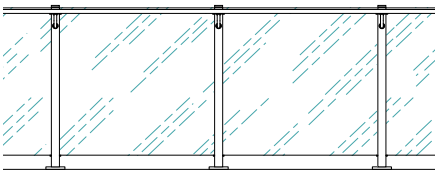

This is a guide for recommended cutting dimensions using the typical extrusions and components illustrated; use of others may require adjustments to the formula and dimensions given here.

REFER TO THE Assembly Specification FOR FURTHER DETAILS

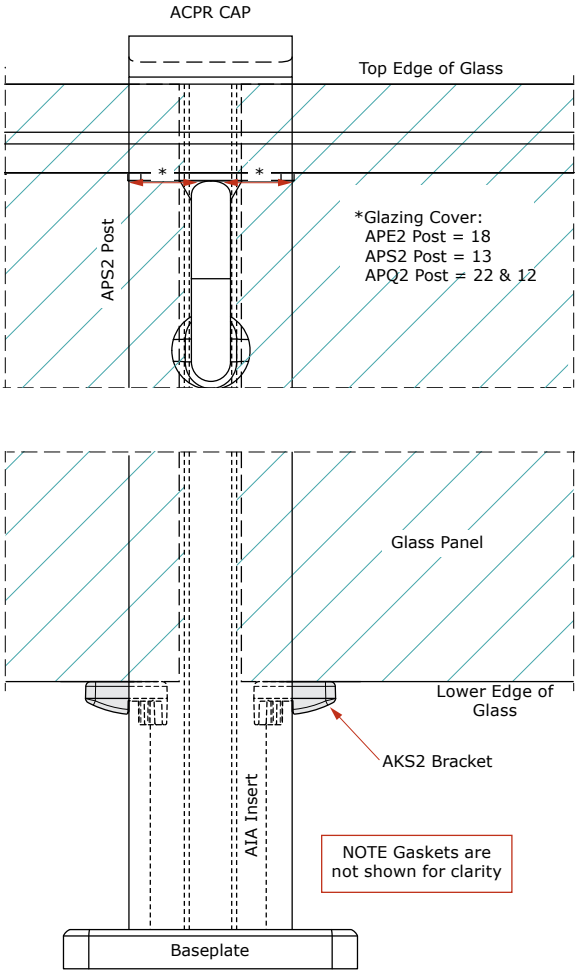

TYPICAL ELEVATION
APS2 Post Illustrated

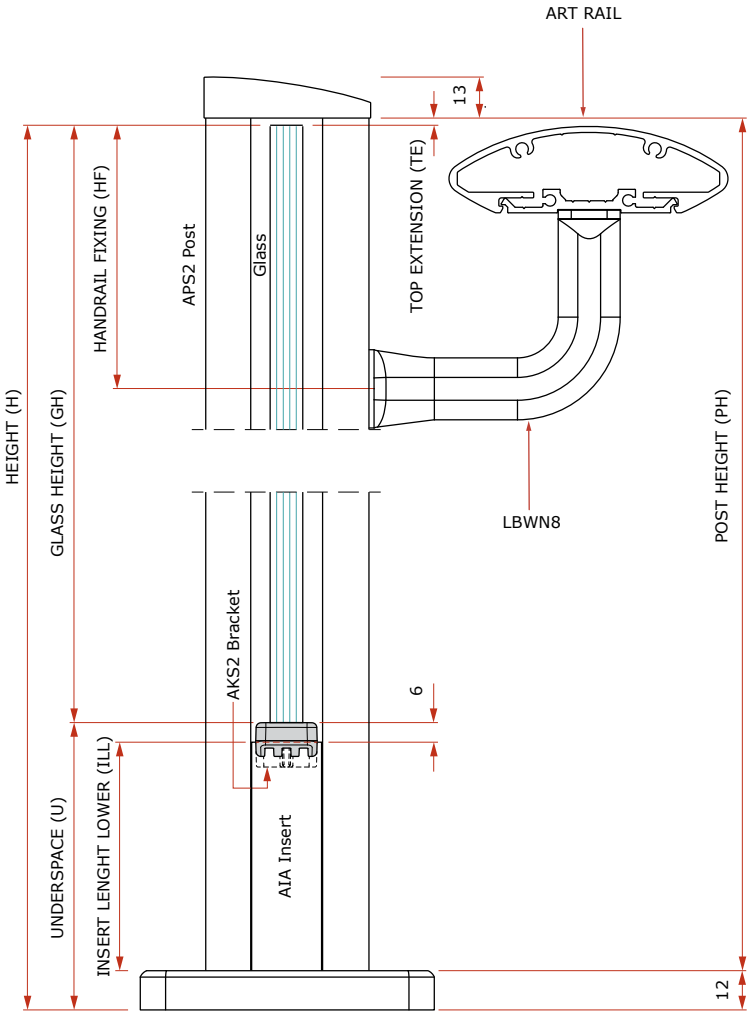

TYPICAL CROSS SECTION

'VETRO' (PRR SIDE RAIL) - VERTICAL DIMENSIONS

'VETRO' (PRR SIDE RAIL) - VERTICAL DIMENSIONS[1]					
DIMENSION		FORMULA	TYPICAL VALUES (mm)		
HEIGHT	(H)	As specified	1000	1100	1200
UNDERSPACE	(U)	As specified	88[2]	88[2]	88[2]
TOP EXTENSION	(TE)	As specified	2	2	2
POST HEIGHT	(PH)	H+TE-12mm	990	1090	1190
INSERT LENGTH LOWER	(ILL)	U-18mm	70	70	70
HANDRAIL FIXING	(HF)	TE+78mm[4]	81	81	81
GLASS HEIGHT	(GH)	H-U	912	1012	1112

1. This table applies only with the use of the parts specified below. Post Heights apply only with 12mm thick baseplates for fixing to deck tops.
2. A nominal 88mm Underspace enables the Post Height to be increased by up to 12mm to suit deck level variations, without affecting Glass Height, or exceeding a 100mm Underspace.
3. Minor dimensions on the drawings have been rounded to the nearest millimetre.
4. These Vertical Dimensions are based on the top of the handrail being horizontally aligned with the top of the glass.

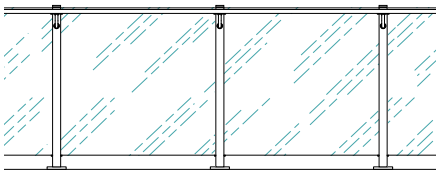

This is a guide for recommended cutting dimensions using the typical extrusions and components illustrated; use of others may require adjustments to the formula and dimensions given here.

REFER TO THE Assembly Specification FOR FURTHER DETAILS

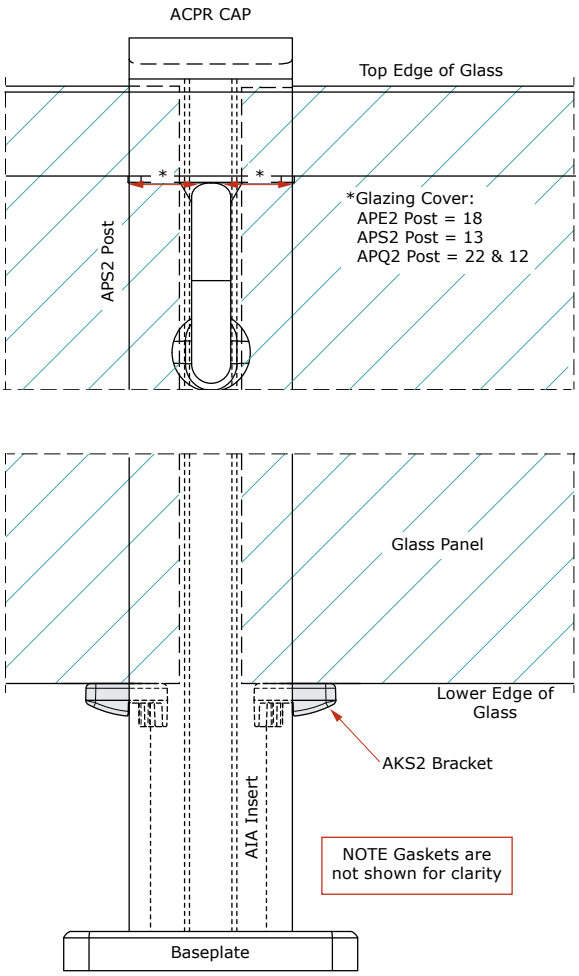

TYPICAL ELEVATION
APS2 Post Illustrated

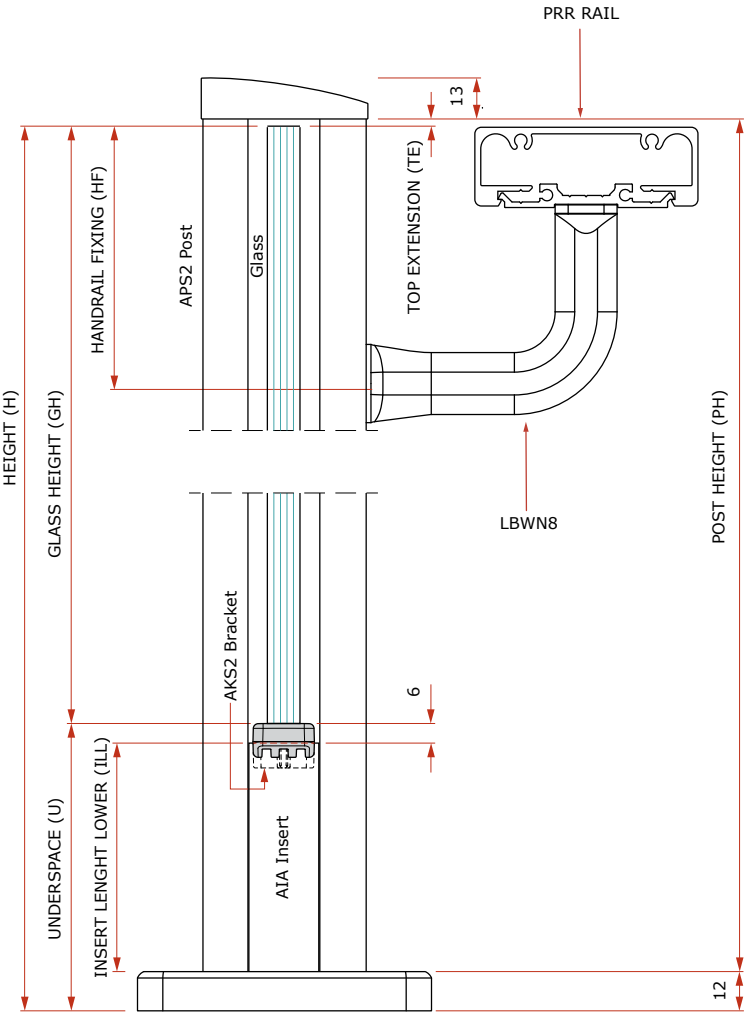

TYPICAL CROSS SECTION

UNEX ARCHITECTURAL BARRIERS
Specifications subject to change without notice
Phone 0800 333 777 | www.unex.co.nz

'VETRO' (VRE SIDE RAIL) - VERTICAL DIMENSIONS

'VETRO' (VRE SIDE RAIL) - VERTICAL DIMENSIONS[1]					
DIMENSION		FORMULA	TYPICAL VALUES (mm)		
HEIGHT	(H)	As specified	1000	1100	1200
UNDERSPACE	(U)	As specified	88[2]	88[2]	88[2]
TOP EXTENSION	(TE)	As specified	2	2	2
POST HEIGHT	(PH)	H+TE-12mm	990	1090	1190
INSERT LENGTH LOWER	(ILL)	U-18mm	70	70	70
HANDRAIL FIXING	(HF)	TE+80mm[4]	82	82	82
GLASS HEIGHT	(GH)	H-U	912	1012	1112

1. This table applies only with the use of the parts specified below. Post Heights apply only with 12mm thick baseplates for fixing to deck tops.
2. A nominal 88mm Underspace enables the Post Height to be increased by up to 12mm to suit deck level variations, without affecting Glass Height, or exceeding a 100mm Underspace.
3. Minor dimensions on the drawings have been rounded to the nearest millimetre.
4. These Vertical Dimensions are based on the top of the handrail being horizontally aligned with the top of the glass.

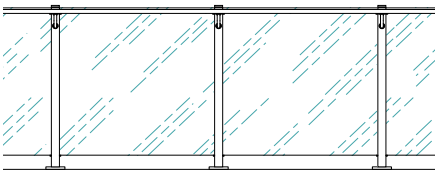

This is a guide for recommended cutting dimensions using the typical extrusions and components illustrated; use of others may require adjustments to the formula and dimensions given here.

REFER TO THE Assembly Specification FOR FURTHER DETAILS

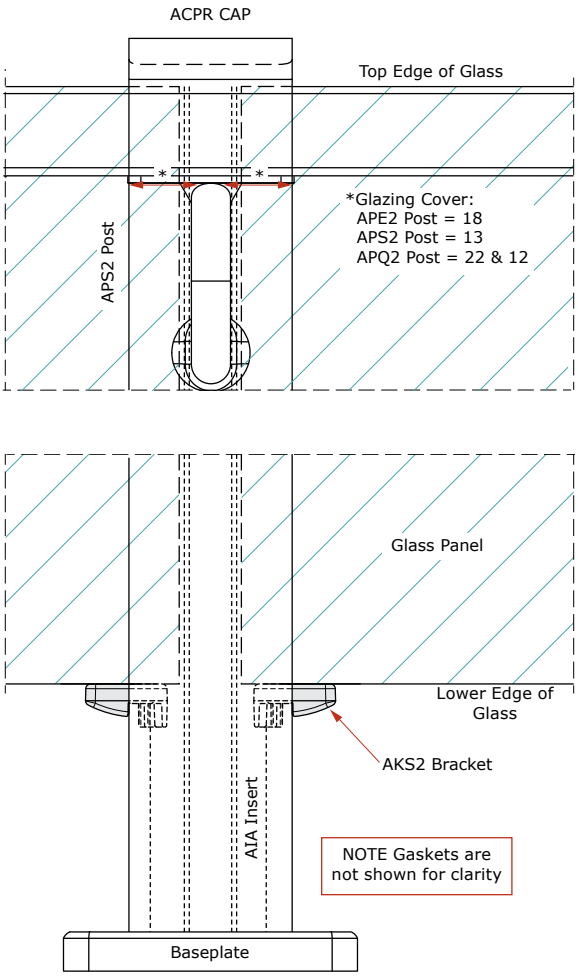

TYPICAL ELEVATION
APS2 Post Illustrated

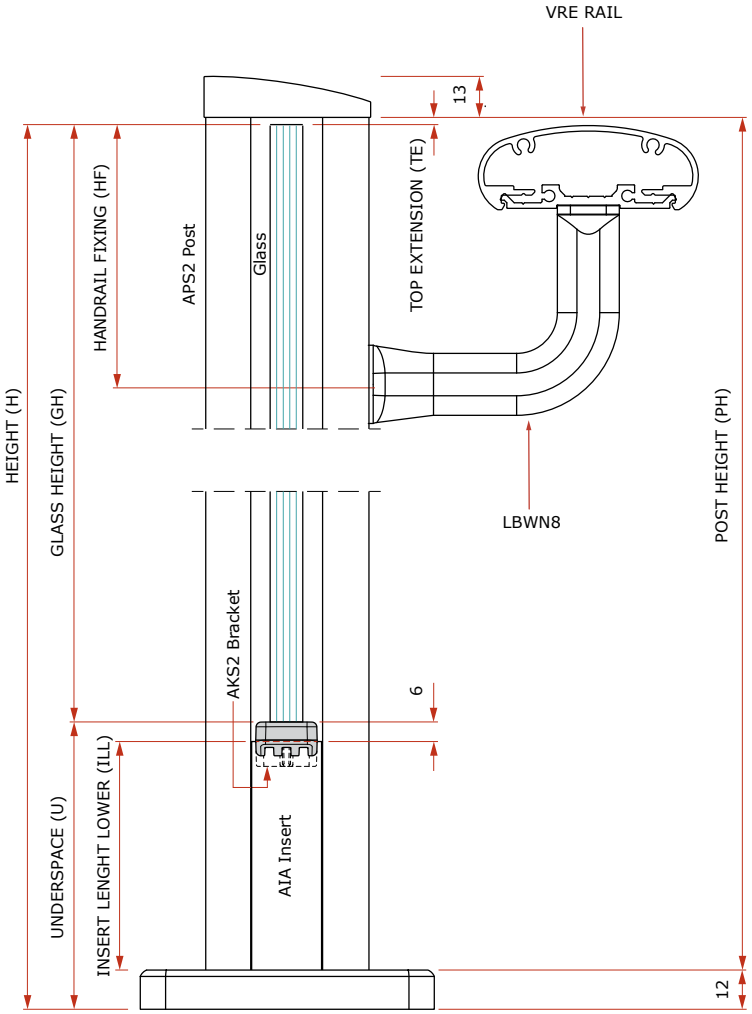

TYPICAL CROSS SECTION

'VETRO' (VRR SIDE RAIL) - VERTICAL DIMENSIONS

'VETRO' (VRR SIDE RAIL) - VERTICAL DIMENSIONS[1]					
DIMENSION		FORMULA	TYPICAL VALUES (mm)		
HEIGHT	(H)	As specified	1000	1100	1200
UNDERSPACE	(U)	As specified	88[2]	88[2]	88[2]
TOP EXTENSION	(TE)	As specified	2	2	2
POST HEIGHT	(PH)	H+TE-12mm	990	1090	1190
INSERT LENGTH LOWER	(ILL)	U-18mm	70	70	70
HANDRAIL FIXING	(HF)	TE+84mm[4]	86	86	86
GLASS HEIGHT	(GH)	H-U	912	1012	1112

1. This table applies only with the use of the parts specified below. Post Heights apply only with 12mm thick baseplates for fixing to deck tops.
2. A nominal 88mm Underspace enables the Post Height to be increased by up to 12mm to suit deck level variations, without affecting Glass Height, or exceeding a 100mm Underspace.
3. Minor dimensions on the drawings have been rounded to the nearest millimetre.
4. These Vertical Dimensions are based on the top of the handrail being horizontally aligned with the top of the glass.

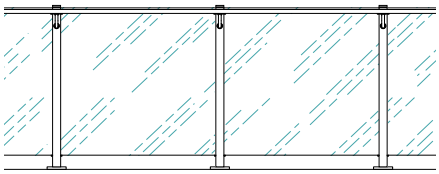

This is a guide for recommended cutting dimensions using the typical extrusions and components illustrated; use of others may require adjustments to the formula and dimensions given here.

REFER TO THE Assembly Specification FOR FURTHER DETAILS

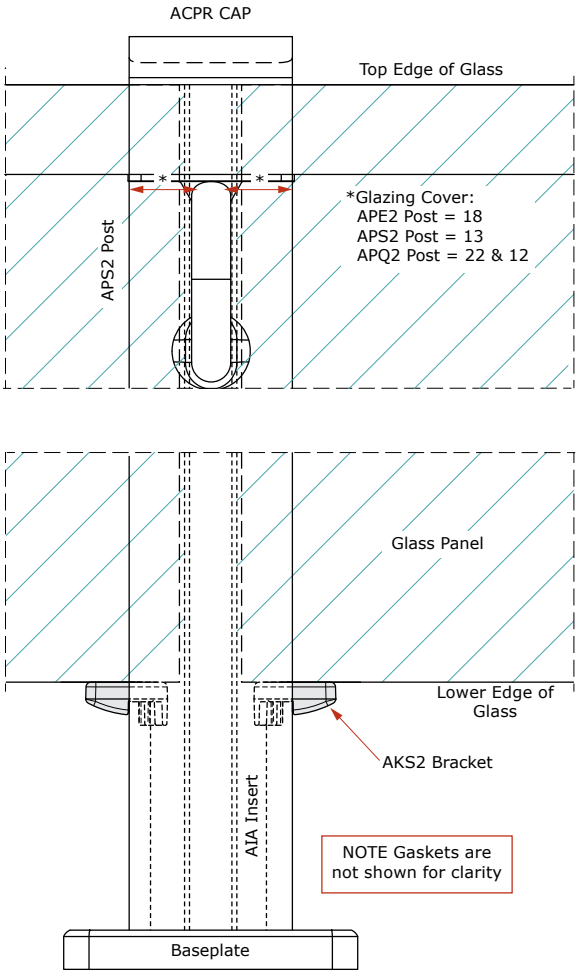

TYPICAL ELEVATION
APS2 Post Illustrated

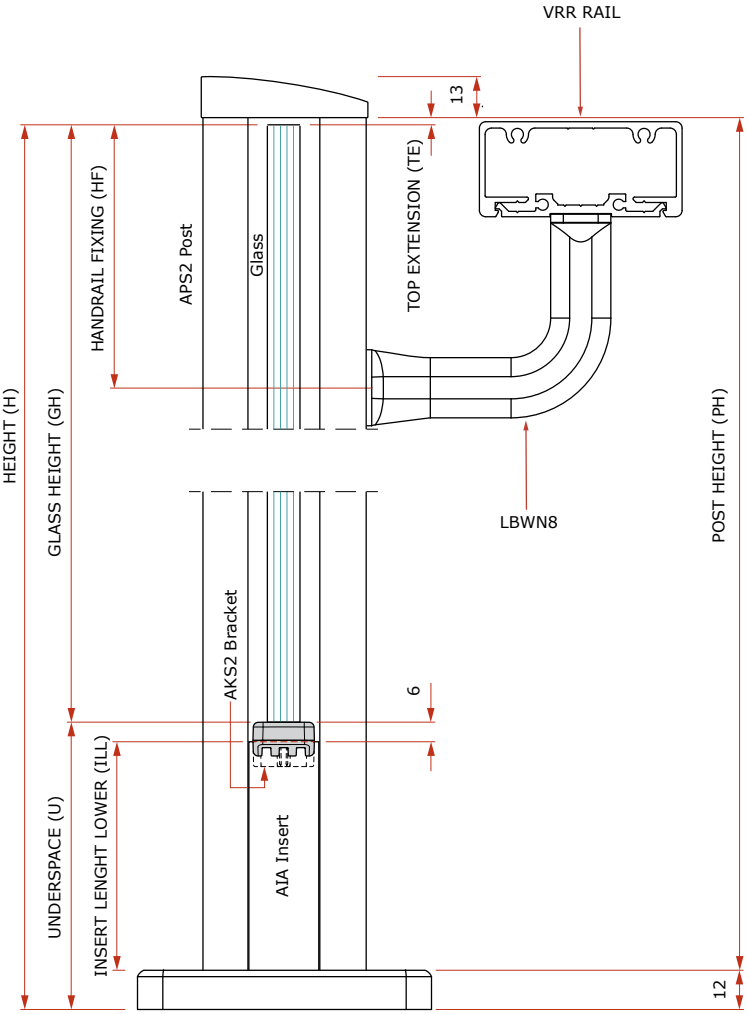

TYPICAL CROSS SECTION

'VETRO' (VRT SIDE RAIL) - VERTICAL DIMENSIONS

'VETRO' (VRT SIDE RAIL)- VERTICAL DIMENSIONS[1]					
DIMENSION		FORMULA	TYPICAL VALUES (mm)		
HEIGHT	(H)	As specified	1000	1100	1200
UNDERSPACE	(U)	As specified	88[2]	88[2]	88[2]
TOP EXTENSION	(TE)	As specified	2	2	2
POST HEIGHT	(PH)	H+TE-12mm	990	1090	1190
INSERT LENGTH LOWER	(ILL)	U-18mm	70	70	70
HANDRAIL FIXING	(HF)	TE+92mm[4]	94	94	94
GLASS HEIGHT	(GH)	H-U	912	1012	1112

1. This table applies only with the use of the parts specified below. Post Heights apply only with 12mm thick baseplates for fixing to deck tops.
2. A nominal 88mm Underspace enables the Post Height to be increased by up to 12mm to suit deck level variations, without affecting Glass Height, or exceeding a 100mm Underspace.
3. Minor dimensions on the drawings have been rounded to the nearest millimetre.
4. These Vertical Dimensions are based on the top of the handrail being horizontally aligned with the top of the glass.

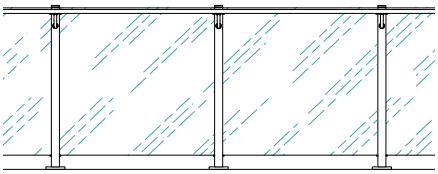

This is a guide for recommended cutting dimensions using the typical extrusions and components illustrated; use of others may require adjustments to the formula and dimensions given here.

REFER TO THE Assembly Specification FOR FURTHER DETAILS

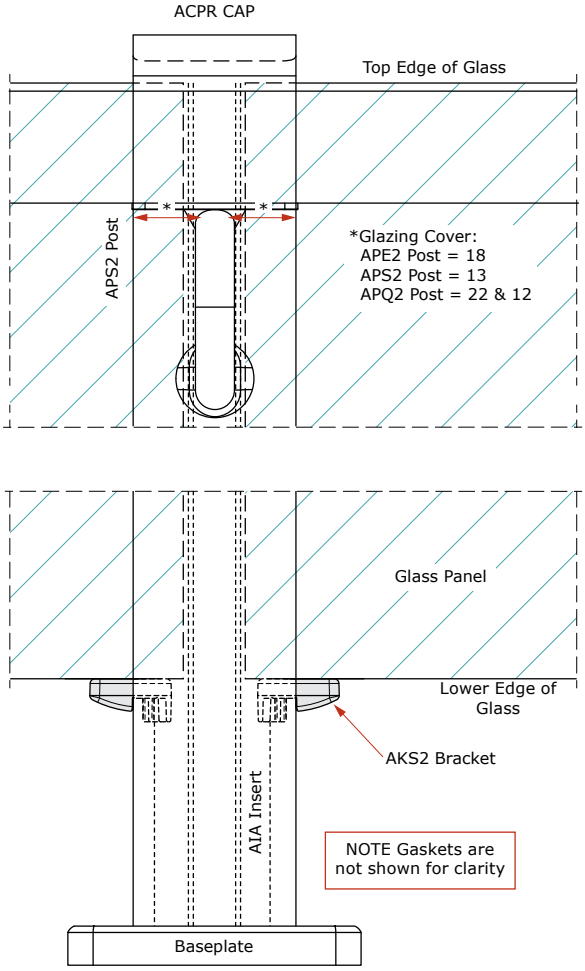

TYPICAL ELEVATION
APS2 Post Illustrated

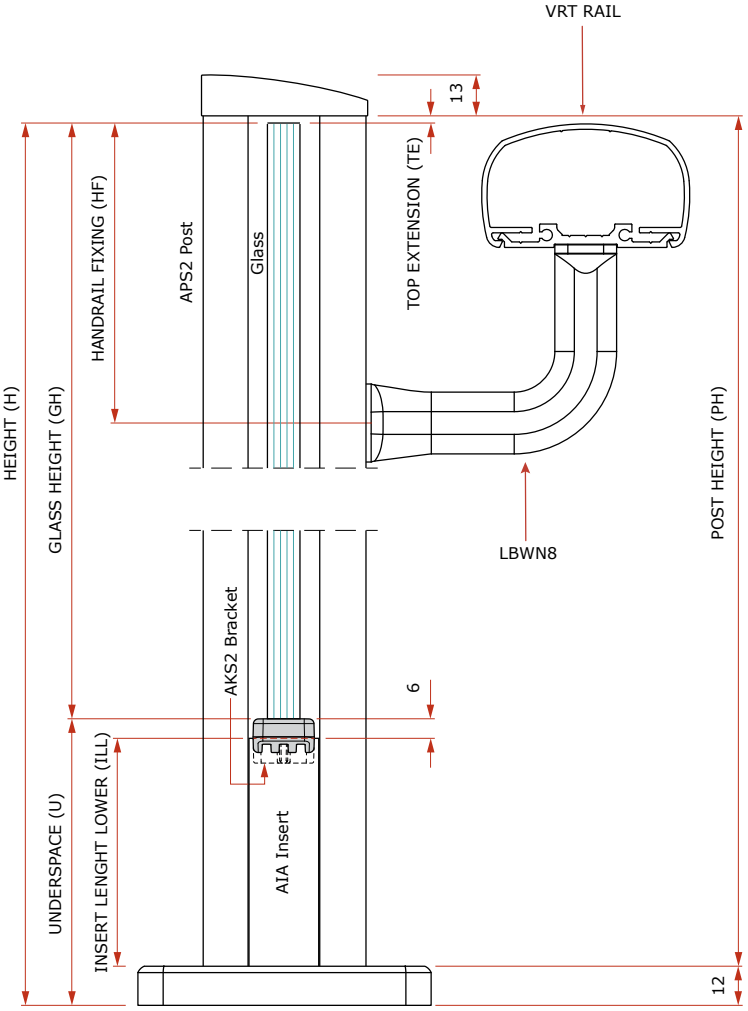

TYPICAL CROSS SECTION

'VETRO' (LRR SIDE RAIL) - VERTICAL DIMENSIONS

'VETRO' (LRR SIDE RAIL) - VERTICAL DIMENSIONS[1]					
DIMENSION		FORMULA	TYPICAL VALUES (mm)		
HEIGHT	(H)	As specified	1000	1100	1200
UNDERSPACE	(U)	As specified	88[2]	88[2]	88[2]
TOP EXTENSION	(TE)	As specified	2	2	2
POST HEIGHT	(PH)	H+TE-12mm	990	1090	1190
INSERT LENGTH LOWER	(ILL)	U-18mm	70	70	70
HANDRAIL FIXING	(HF)	TE+99mm[4]	101	101	101
GLASS HEIGHT	(GH)	H-U	912	1012	1112

1. This table applies only with the use of the parts specified below. Post Heights apply only with 12mm thick baseplates for fixing to deck tops.
2. A nominal 88mm Underspace enables the Post Height to be increased by up to 12mm to suit deck level variations, without affecting Glass Height, or exceeding a 100mm Underspace.
3. Minor dimensions on the drawings have been rounded to the nearest millimetre.
4. These Vertical Dimensions are based on the top of the handrail being horizontally aligned with the top of the glass.

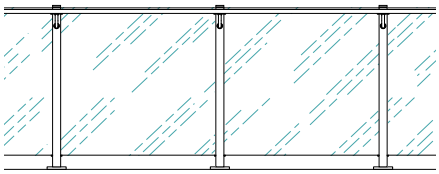

This is a guide for recommended cutting dimensions using the typical extrusions and components illustrated; use of others may require adjustments to the formula and dimensions given here.

REFER TO THE Assembly Specification FOR FURTHER DETAILS

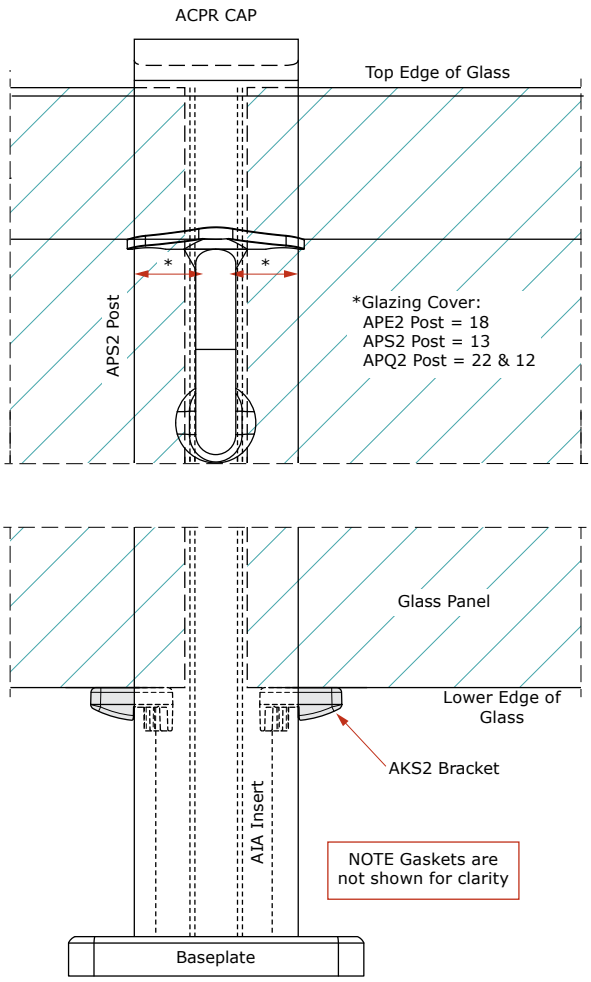

TYPICAL ELEVATION
APS2 Post Illustrated

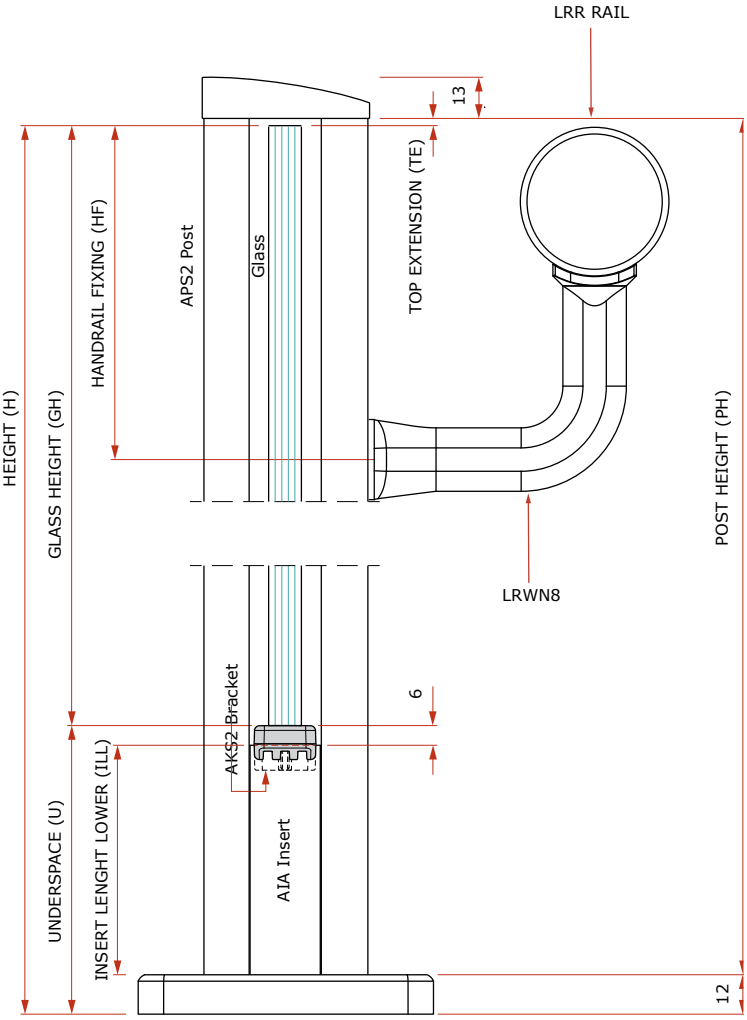

TYPICAL CROSS SECTION

'SURREAL' (NO RAIL) - VERTICAL DIMENSIONS

'SURREAL' (NO RAIL) - VERTICAL DIMENSIONS[1]				
DIMENSION	FORMULA	TYPICAL VALUES (mm)		
HEIGHT (H)	As specified	1000	1100	1200
UNDERSPACE (U)	As specified	-	88[2]	88[2]
GLASS EXTENSION (GE)	-	-	100[4]	100[4]
POST HEIGHT (PH)	H-GE-12mm	-	988	1088
INSERT LENGTH LOWER (ILL)	U-18mm	-	70	70
GLASS HEIGHT (GH)	H-U	-	1012	1112

1. This table applies only with the use of the parts specified below. Post Heights apply only with 12mm thick baseplates for fixing to deck tops.
2. A nominal 88mm Underspace enables the Post Height to be increased by up to 12mm to suit deck level variations, without affecting Glass Height, or exceeding a 100mm Underspace.
3. Minor dimensions on the drawings have been rounded to the nearest millimetre.
4. UNEX standard specifications and these Vertical Dimensions are based on the top of the glass being 100mm above the top of the post, which must be at the MINIMUM BARRIER HEIGHT in accordance with NZBC F4/AS1.
5. Both the vertical edges of the glass shall fully attach to the post with structural silicone, for the full height and thickness of the glass.

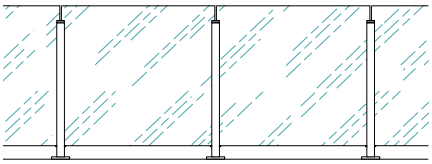

This is a guide for recommended cutting dimensions using the typical extrusions and components illustrated; use of others may require adjustments to the formula and dimensions given here.

REFER TO THE Assembly Specification FOR FURTHER DETAILS

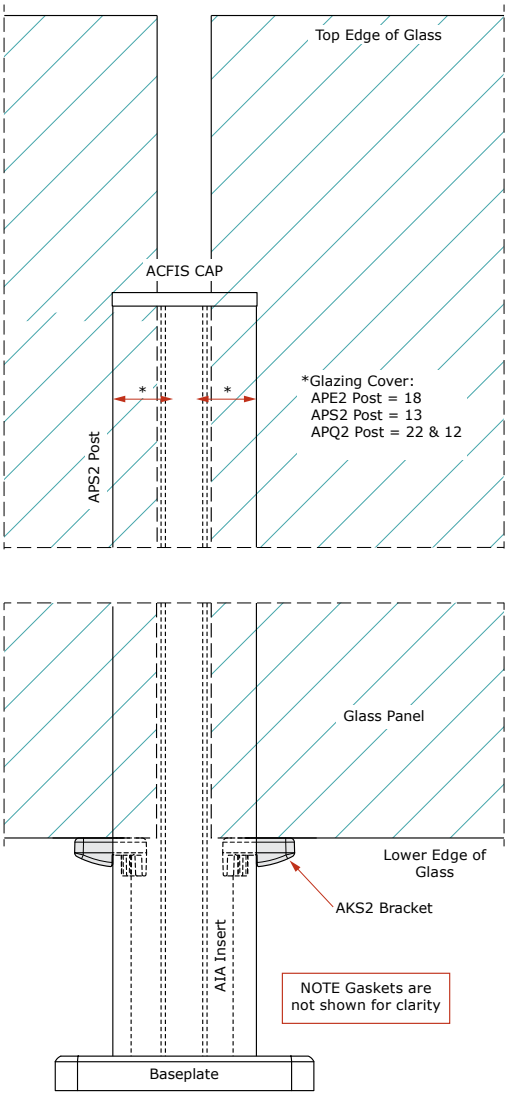

TYPICAL ELEVATION
APS2 Post Illustrated

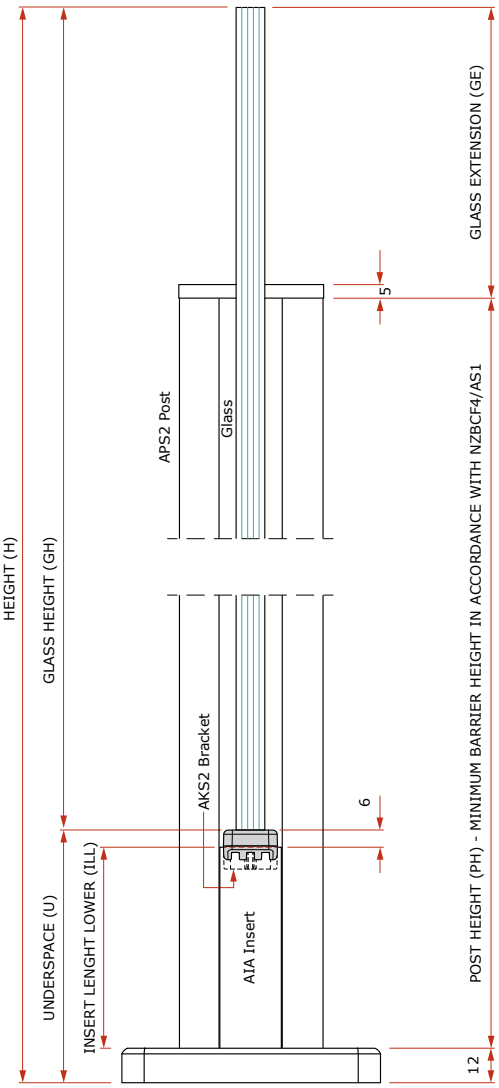

TYPICAL CROSS SECTION

'SURREAL' (ART SIDE RAIL) - VERTICAL DIMENSIONS

'SURREAL' (ART SIDE RAIL) - VERTICAL DIMENSIONS[1]					
DIMENSION		FORMULA	TYPICAL VALUES (mm)		
HEIGHT	(H)	As specified	1000	1100	1200
UNDERSPACE	(U)	As specified	-	88[2]	88[2]
GLASS EXTENSION	(GE)	-	-	100[4]	100[4]
POST HEIGHT	(PH)	H-GE-12mm	-	988	1088
INSERT LENGTH LOWER	(ILL)	U-18mm	-	70	70
GLASS HEIGHT	(GH)	H-U	-	1012	1112

1. This table applies only with the use of the parts specified below. Post Heights apply only with 12mm thick baseplates for fixing to deck tops.
2. A nominal 88mm Underspace enables the Post Height to be increased by up to 12mm to suit deck level variations, without affecting Glass Height, or exceeding a 100mm Underspace.
3. Minor dimensions on the drawings have been rounded to the nearest millimetre.
4. UNEX standard specifications and these Vertical Dimensions are based on the top of the glass being 100mm above the top of the post, which must be at the MINIMUM BARRIER HEIGHT in accordance with NZBC F4/AS1.

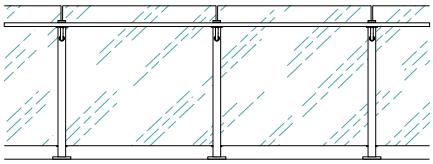

This is a guide for recommended cutting dimensions using the typical extrusions and components illustrated; use of others may require adjustments to the formula and dimensions given here.

REFER TO THE Assembly Specification FOR FURTHER DETAILS

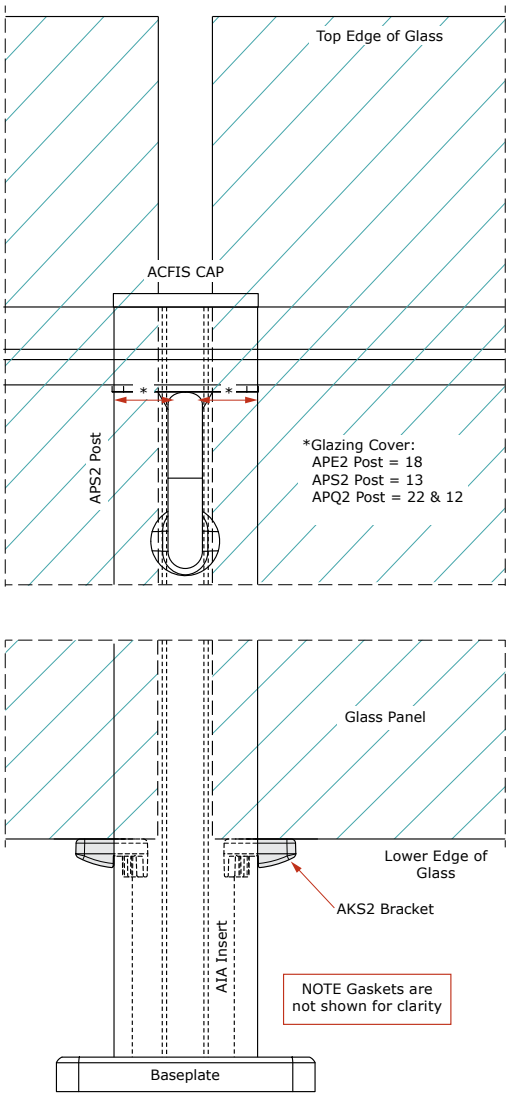

TYPICAL ELEVATION
APS2 Post Illustrated

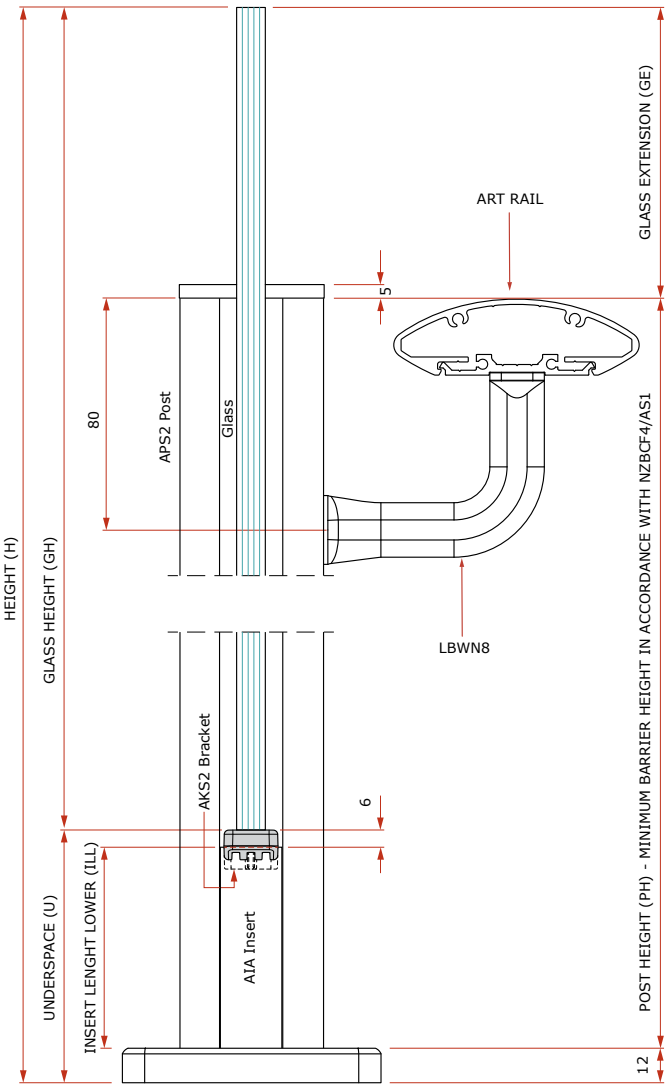

TYPICAL CROSS SECTION

'SURREAL' (PRR SIDE RAIL) - VERTICAL DIMENSIONS

'SURREAL' (PRR SIDE RAIL) - VERTICAL DIMENSIONS[1]				
DIMENSION	FORMULA	TYPICAL VALUES (mm)		
HEIGHT (H)	As specified	1000	1100	1200
UNDERSPACE (U)	As specified	-	88[2]	88[2]
GLASS EXTENSION (GE)	-	-	100[4]	100[4]
POST HEIGHT (PH)	H-GE-12mm	-	988	1088
INSERT LENGTH LOWER (ILL)	U-18mm	-	70	70
GLASS HEIGHT (GH)	H-U	-	1012	1112

1. This table applies only with the use of the parts specified below. Post Heights apply only with 12mm thick baseplates for fixing to deck tops.
2. A nominal 88mm Underspace enables the Post Height to be increased by up to 12mm to suit deck level variations, without affecting Glass Height, or exceeding a 100mm Underspace.
3. Minor dimensions on the drawings have been rounded to the nearest millimetre.
4. UNEX standard specifications and these Vertical Dimensions are based on the top of the glass being 100mm above the top of the post, which must be at the MINIMUM BARRIER HEIGHT in accordance with NZBC F4/AS1.

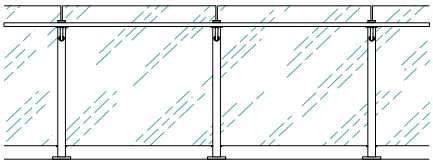

This is a guide for recommended cutting dimensions using the typical extrusions and components illustrated; use of others may require adjustments to the formula and dimensions given here.

REFER TO THE Assembly Specification FOR FURTHER DETAILS

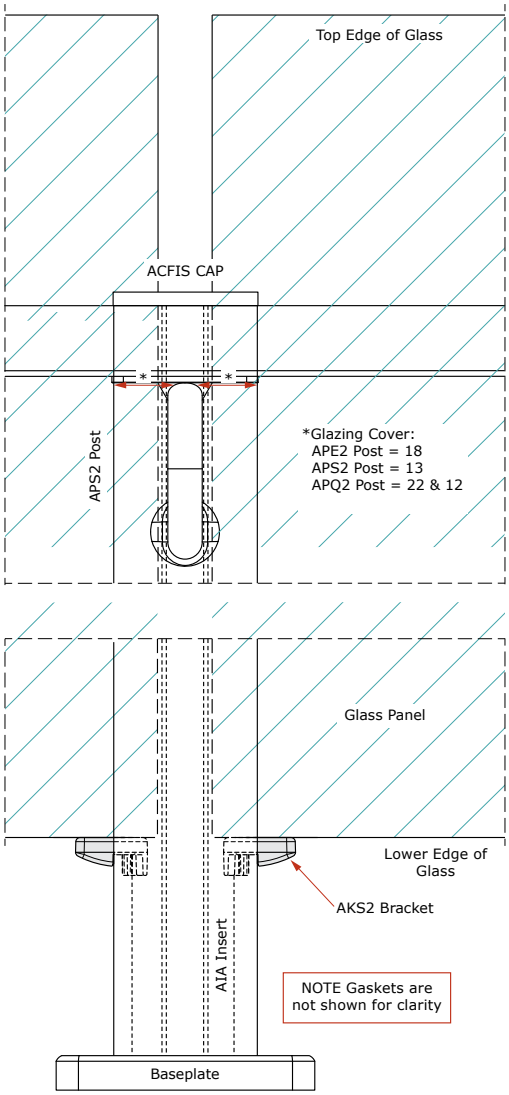

TYPICAL ELEVATION
APS2 Post Illustrated

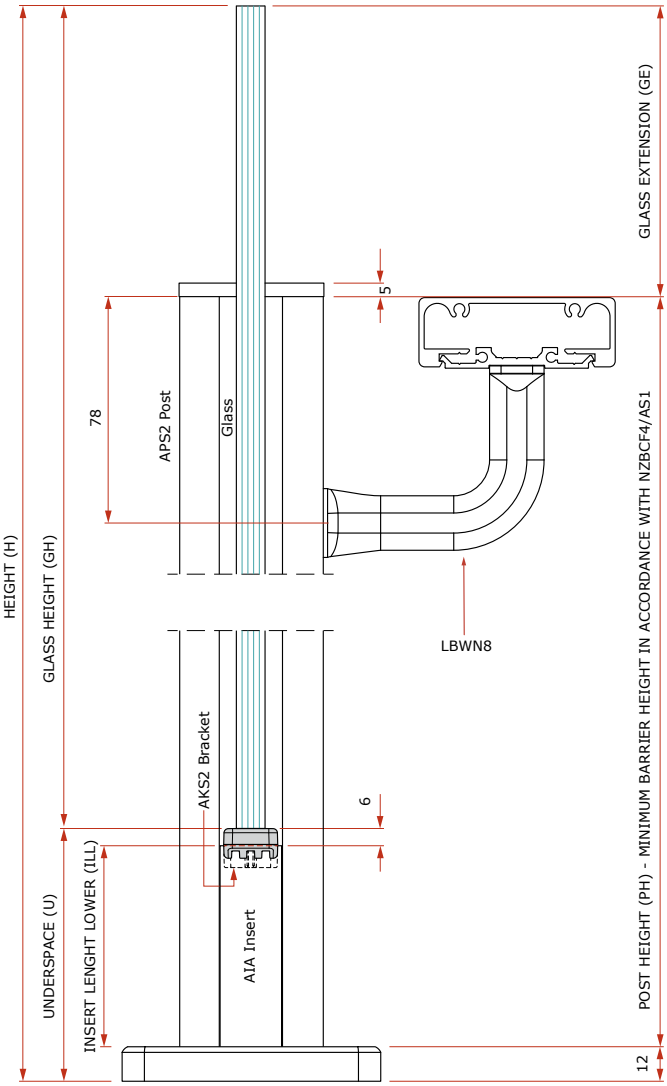

TYPICAL CROSS SECTION

'SURREAL' (VRE SIDE RAIL) - VERTICAL DIMENSIONS

'SURREAL' (VRE SIDE RAIL) - VERTICAL DIMENSIONS[1]				
DIMENSION	FORMULA	TYPICAL VALUES (mm)		
HEIGHT (H)	As specified	1000	1100	1200
UNDERSPACE (U)	As specified	-	88[2]	88[2]
GLASS EXTENSION (GE)	-	-	100[4]	100[4]
POST HEIGHT (PH)	H-GE-12mm	-	988	1088
INSERT LENGTH LOWER (ILL)	U-18mm	-	70	70
GLASS HEIGHT (GH)	H-U	-	1012	1112

1. This table applies only with the use of the parts specified below. Post Heights apply only with 12mm thick baseplates for fixing to deck tops.
2. A nominal 88mm Underspace enables the Post Height to be increased by up to 12mm to suit deck level variations, without affecting Glass Height, or exceeding a 100mm Underspace.
3. Minor dimensions on the drawings have been rounded to the nearest millimetre.
4. UNEX standard specifications and these Vertical Dimensions are based on the top of the glass being 100mm above the top of the post, which must be at the MINIMUM BARRIER HEIGHT in accordance with NZBC F4/AS1.

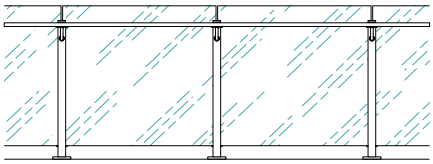

This is a guide for recommended cutting dimensions using the typical extrusions and components illustrated; use of others may require adjustments to the formula and dimensions given here.

REFER TO THE Assembly Specification FOR FURTHER DETAILS

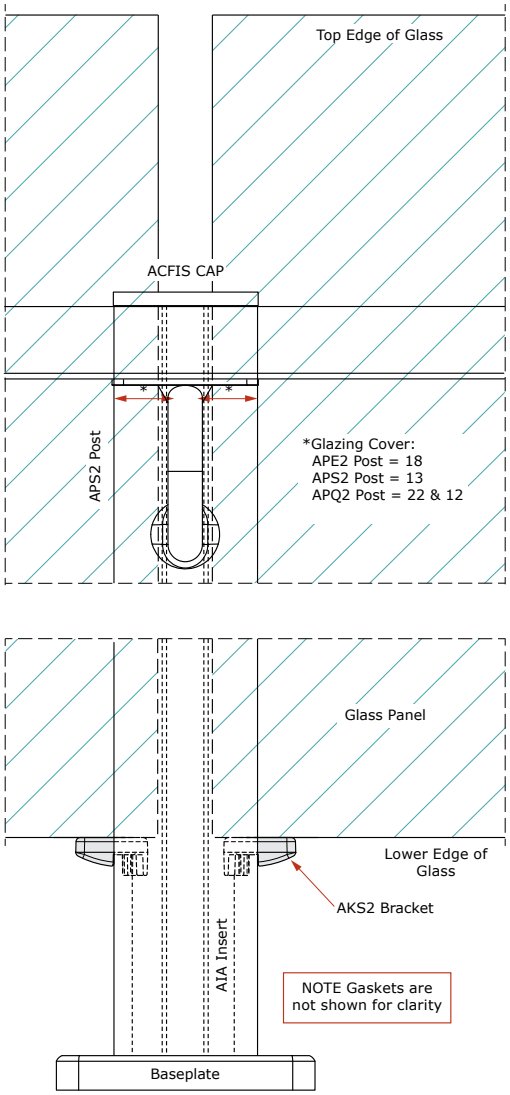

TYPICAL ELEVATION
APS2 Post Illustrated

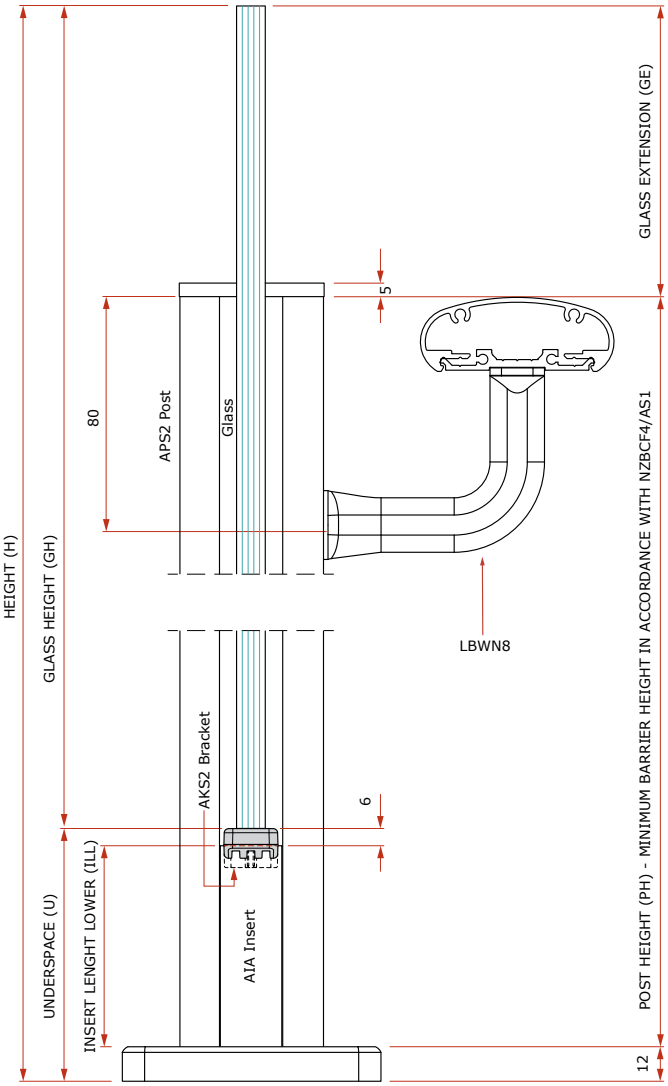

TYPICAL CROSS SECTION

'SURREAL' (VRR SIDE RAIL) - VERTICAL DIMENSIONS

'SURREAL' (VRR SIDE RAIL) - VERTICAL DIMENSIONS[1]				
DIMENSION	FORMULA	TYPICAL VALUES (mm)		
HEIGHT (H)	As specified	1000	1100	1200
UNDERSPACE (U)	As specified	-	88[2]	88[2]
GLASS EXTENSION (GE)	-	-	100[4]	100[4]
POST HEIGHT (PH)	H-GE-12mm	-	988	1088
INSERT LENGTH LOWER (ILL)	U-18mm	-	70	70
GLASS HEIGHT (GH)	H-U	-	1012	1112

1. This table applies only with the use of the parts specified below. Post Heights apply only with 12mm thick baseplates for fixing to deck tops.
2. A nominal 88mm Underspace enables the Post Height to be increased by up to 12mm to suit deck level variations, without affecting Glass Height, or exceeding a 100mm Underspace.
3. Minor dimensions on the drawings have been rounded to the nearest millimetre.
4. UNEX standard specifications and these Vertical Dimensions are based on the top of the glass being 100mm above the top of the post, which must be at the MINIMUM BARRIER HEIGHT in accordance with NZBC F4/AS1.

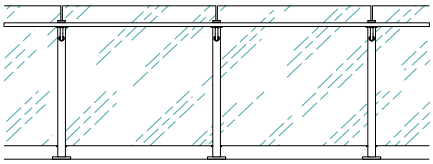

This is a guide for recommended cutting dimensions using the typical extrusions and components illustrated; use of others may require adjustments to the formula and dimensions given here.

REFER TO THE Assembly Specification FOR FURTHER DETAILS

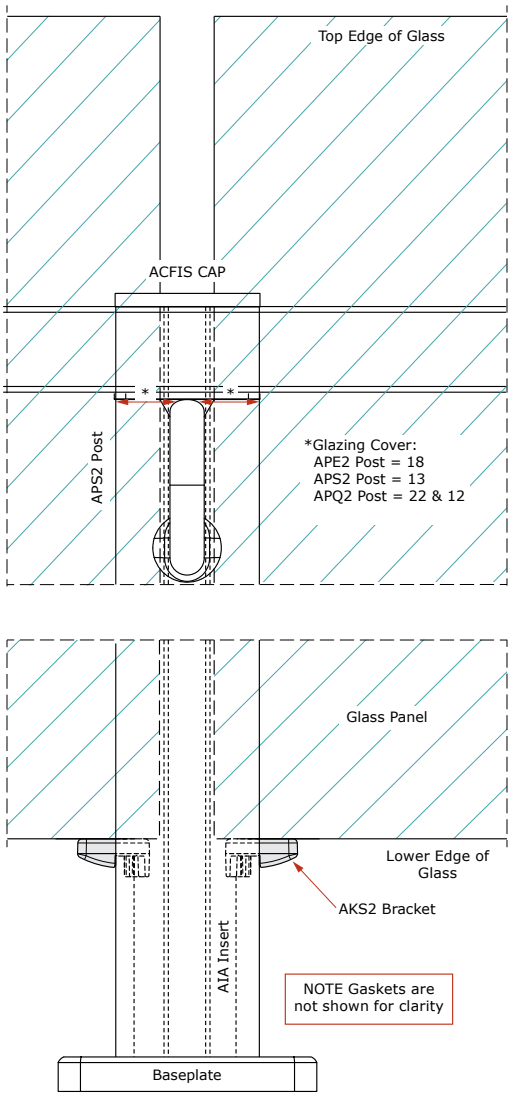

TYPICAL ELEVATION
APS2 Post Illustrated

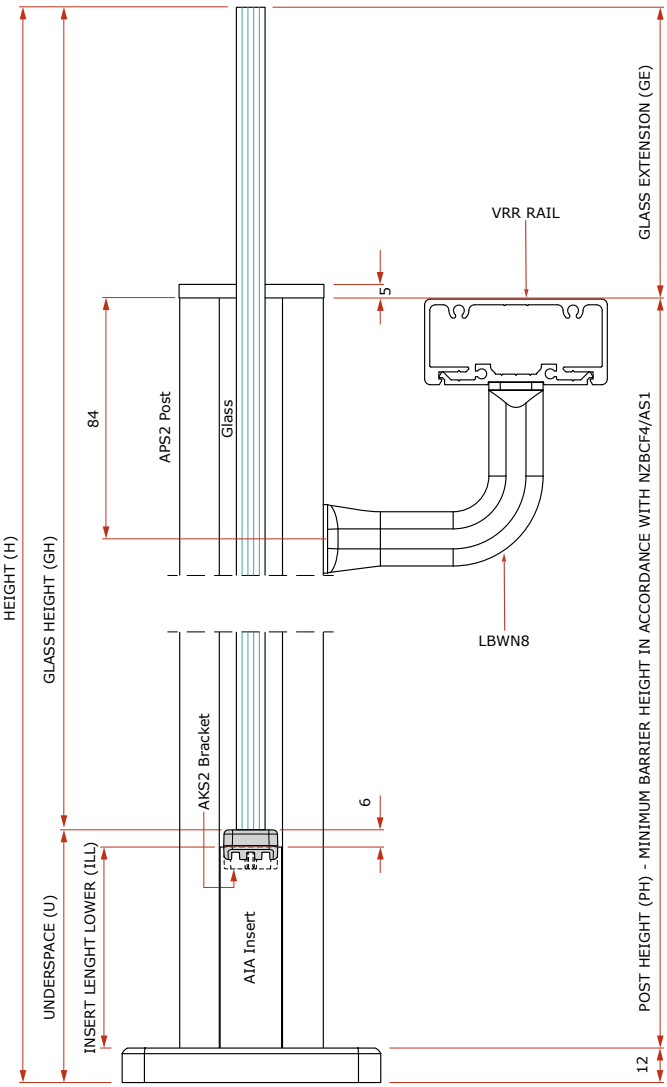

TYPICAL CROSS SECTION

'SURREAL' (VRT SIDE RAIL) - VERTICAL DIMENSIONS

'SURREAL' (VRT SIDE RAIL) - VERTICAL DIMENSIONS[1]				
DIMENSION	FORMULA	TYPICAL VALUES (mm)		
HEIGHT (H)	As specified	1000	1100	1200
UNDERSPACE (U)	As specified	-	88[2]	88[2]
GLASS EXTENSION (GE)	-	-	100[4]	100[4]
POST HEIGHT (PH)	H-GE-12mm	-	988	1088
INSERT LENGTH LOWER (ILL)	U-18mm	-	70	70
GLASS HEIGHT (GH)	H-U	-	1012	1112

1. This table applies only with the use of the parts specified below. Post Heights apply only with 12mm thick baseplates for fixing to deck tops.
2. A nominal 88mm Underspace enables the Post Height to be increased by up to 12mm to suit deck level variations, without affecting Glass Height, or exceeding a 100mm Underspace.
3. Minor dimensions on the drawings have been rounded to the nearest millimetre.
4. UNEX standard specifications and these Vertical Dimensions are based on the top of the glass being 100mm above the top of the post, which must be at the MINIMUM BARRIER HEIGHT in accordance with NZBC F4/AS1.

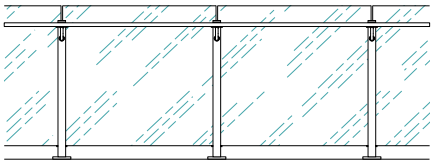

This is a guide for recommended cutting dimensions using the typical extrusions and components illustrated; use of others may require adjustments to the formula and dimensions given here.

REFER TO THE Assembly Specification FOR FURTHER DETAILS

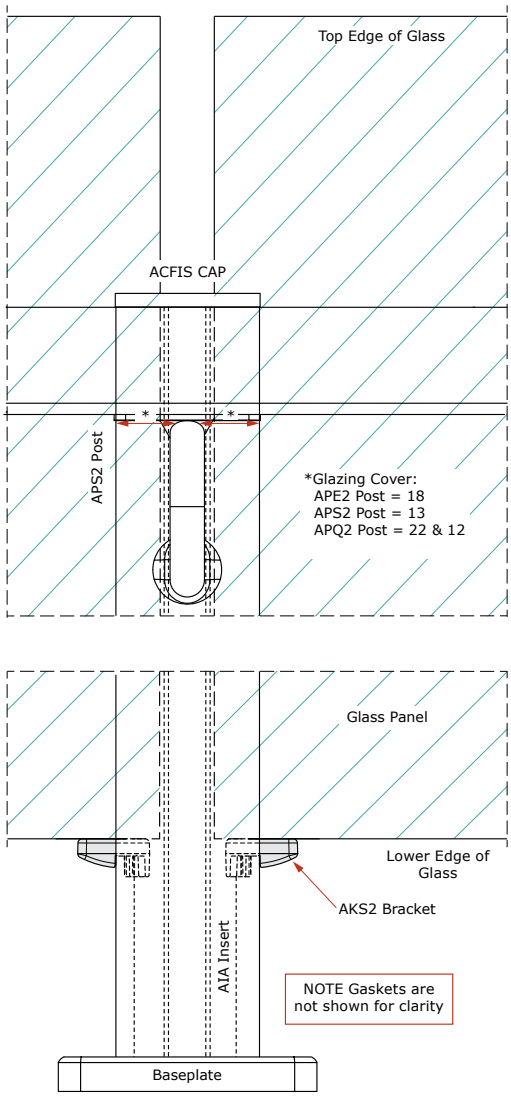

TYPICAL ELEVATION
APS2 Post Illustrated

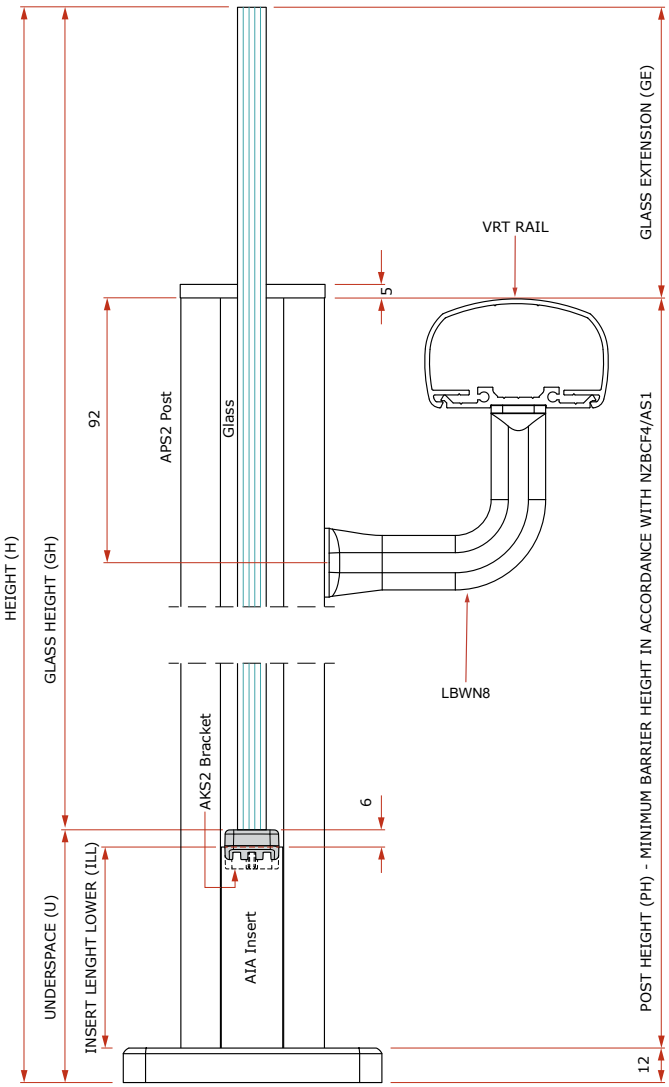

TYPICAL CROSS SECTION

'SURREAL' (LRR SIDE RAIL) - VERTICAL DIMENSIONS

'SURREAL' (LRR SIDE RAIL) - VERTICAL DIMENSIONS[1]				
DIMENSION	FORMULA	TYPICAL VALUES (mm)		
HEIGHT (H)	As specified	1000	1100	1200
UNDERSPACE (U)	As specified	-	88[2]	88[2]
GLASS EXTENSION (GE)	-	-	100[4]	100[4]
POST HEIGHT (PH)	H+TE-12mm	-	988	1088
INSERT LENGTH LOWER (ILL)	U-18mm	-	70	70
GLASS HEIGHT (GH)	H-U	-	1012	1112

1. This table applies only with the use of the parts specified below. Post Heights apply only with 12mm thick baseplates for fixing to deck tops.
2. A nominal 88mm Underspace enables the Post Height to be increased by up to 12mm to suit deck level variations, without affecting Glass Height, or exceeding a 100mm Underspace.
3. Minor dimensions on the drawings have been rounded to the nearest millimetre.
4. UNEX standard specifications and these Vertical Dimensions are based on the top of the glass being 100mm above the top of the post, which must be at the MINIMUM BARRIER HEIGHT in accordance with NZBC F4/AS1.

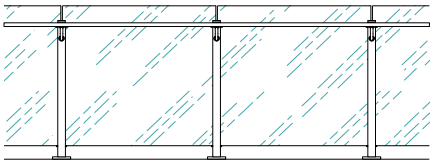

This is a guide for recommended cutting dimensions using the typical extrusions and components illustrated; use of others may require adjustments to the formula and dimensions given here.

REFER TO THE Assembly Specification FOR FURTHER DETAILS

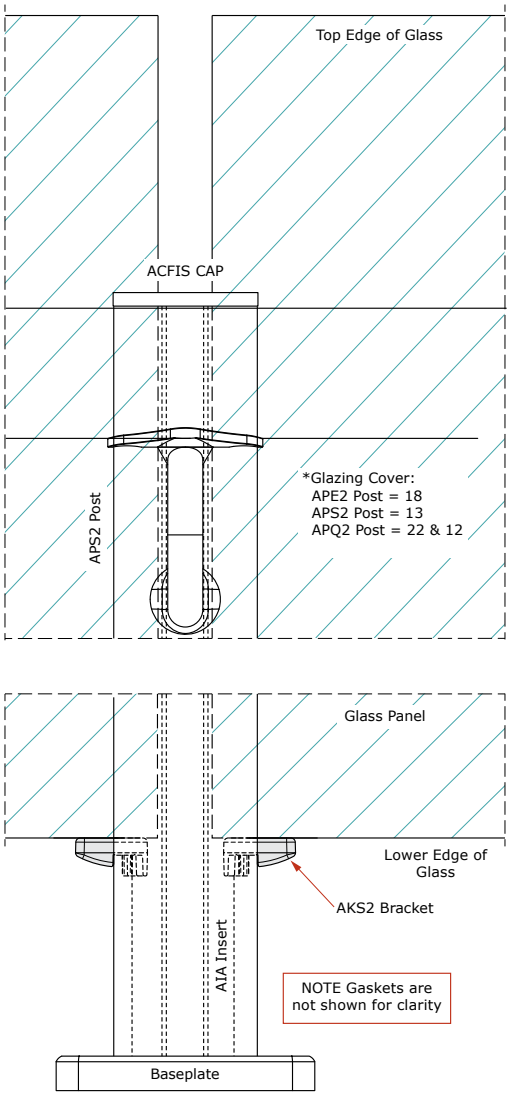

TYPICAL ELEVATION
APS2 Post Illustrated

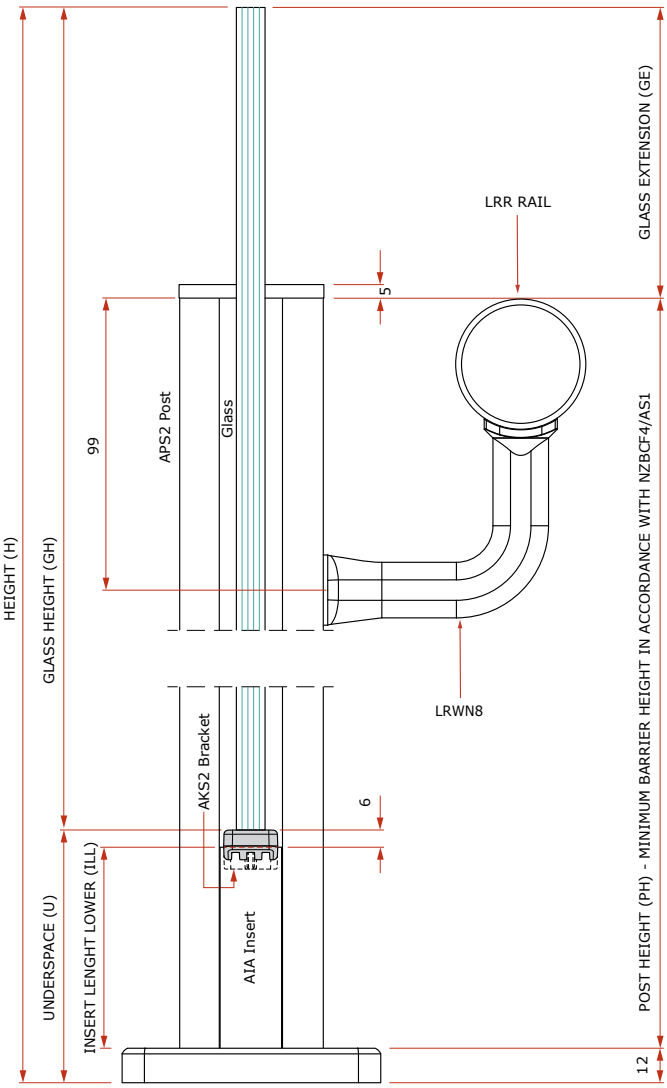

TYPICAL CROSS SECTION

DURABILITY

The New Zealand Building Code requires all balustrading to be sufficiently durable so as to remain functional for certain specified periods of time. These periods are given in the Acceptable Solution B2/AS1, which indicates a 'serviceable' durability requirement of 50 years for balustrade posts and top rails, and 15 years for infill members.

Whilst specific details to achieve these requirements for the common situations are given throughout this manual, it is essential that they are applied to all exterior balustrade installations regardless. These issues may be placed under two general areas as follows;

1. DRAINAGE

Water entrapped in members can potentially be detrimental to the durability of a balustrade, and provision for moisture to drain must therefore be made. Common areas where such provision is necessary, and how it can be achieved is as follows;

1.1. TOP FIXED HOLLOW POSTS
Mill two drainage slots 5mm x 5mm at base-plate level, one on each side of the post 10mm off the post centreline. Alternatively, provide two Ø5mm drainage holes in these positions, centred 3mm above the bottom of the post.

1.2. FACE FIXED POSTS
Drill a central Ø6mm drainage hole in the bottom post blank of each post. Standard base blanks from UNEX will generally have these holes already drilled. With the APE2, API2, APQ2, APS2 and APT posts, also leave the AIR infill clip clear of the post blank by 3mm on both sides, to ensure all parts of the post are drained.

1.3. GLAZED LOWER RAILS
Drill a Ø5.5mm hole mid span on glazed lower rails that are horizontal, or at the lower end of lower rails that are sloping.

1.4. INNER TOP RAILS
To minimise entrance of moisture into posts, any Inner Top Rails (e.g. DRH, PZT etc) should be continuous over the posts wherever possible. Where joints are required, these shall be centred on a post with a minimum gap between rails.

2. SEPARATION OF MATERIALS

Dissimilar materials can react with each other in varying degrees if in contact with each other. This can potentially reduce the durability of a balustrade and measures must be taken to minimise this occurring. This means that aluminium members must be separated from other materials, including stainless steel fixings, as outlined below;

2.1. TOP FIXED POSTS
A polymer washer shall be inserted between the top of the base-plate and the underside of all stainless steel washers used for substrate fasteners. UNEX Product codes are FWP8-22G and FWP10-22G for M8 and M10 respectively. Note for FC8-165 coach screws, the standard washers supplied with rubber seals will be adequate.

2.2. SIDE FIXED POSTS
(a) A polymer washer shall be placed between the stainless steel washer adjacent to the head of the fixing screw and the side of the post. UNEX product codes are FWP8-22G and FWP10-22G for M8 and M10 respectively.

(b) A strip of neoprene gasket shall be placed between the side of the post and the adjacent substrate. This may also assist with waterproofing issues if required. These are available from UNEX in four widths of 24mm, 36mm, 42mm and 50mm in 1.2 metre lengths. UNEX product code example SG42-12 is 42mm wide (for 50mm post) and 1.2 metres long.
- For DKF brackets use SG24-12
- For VPM2 posts use SG36-12
- For 50mm wide posts use SG42-12
- For 60mm wide posts use SG50-12

DURABILITY (CONT.)

Cut strips to the length required to obtain contact over the full depth of bearing surface.

(c) Where the stainless steel fixings pass through the post, the fixing shall be wrapped with approx three turns of Teflon tape where it would otherwise be in contact with the aluminium post. UNEX product code is TTAM.

(d) For DKF brackets, use FJ6-60S Jointer bolt sets. These sets have been assembled with the items required for separation of materials.

2.3. STAINLESS STEEL ASSEMBLY SCREWS
The following stainless steel assembly fasteners must be specially treated to minimise any reaction with the aluminium members. This process is carried out by UNEX, and these screws must therefore be purchased from them.

- All screws connecting posts to the post base-plates, or post blanks.
- All lower rail or mid rail spigot screws connecting the spigot to the post.
- All screws connecting the inner top rails or inner top glazing rails to the top of the posts.

2.4. GRADES OF STAINLESS STEEL
All stainless steel fixings and substrate fasteners must be grade 316 stainless steel for maximum durability.

2.5. OTHER
For situations not covered above; EPDM or Neoprene may be a useful product to provide separation between dissimilar materials, and Lanolin grease (available from UNEX – code TGL-05L) can be a useful product to place around areas of contact between aluminium and stainless steel fasteners.

AKS2 ATTACHMENT TO RECESSED POSTS : TOP MOUNTED SITUATION

This page relates to attaching AKS2 plates via AIA inserts to any recessed post (e.g. APQ2, ...etc), for use only in situations where the post is top mounted via a base plate.

The AKS2 plate is typically used in the 'VETRO', 'SURREAL', 'SPECTRA', and 'SIENA' styles, for the purpose of supporting the vertical weight of the glass infill.

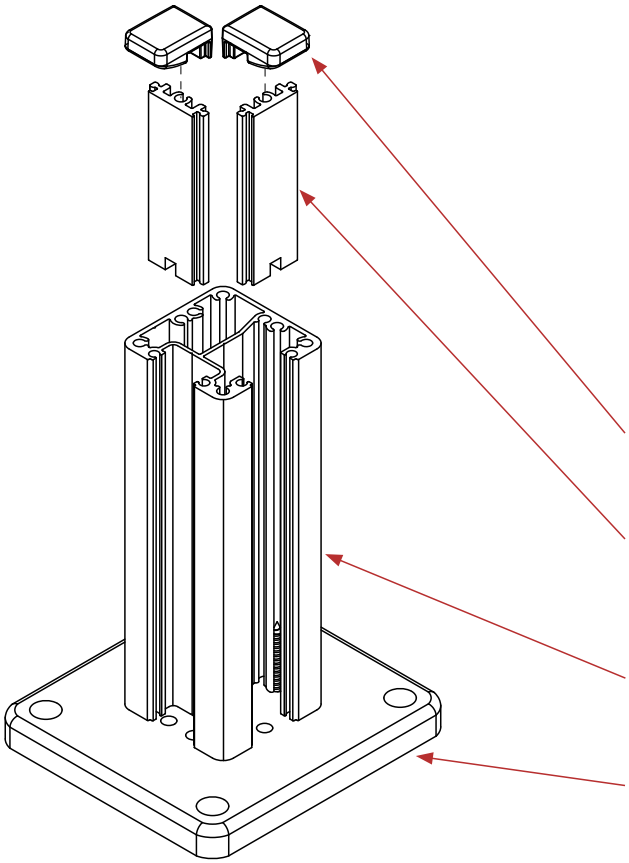

CROSS SECTION

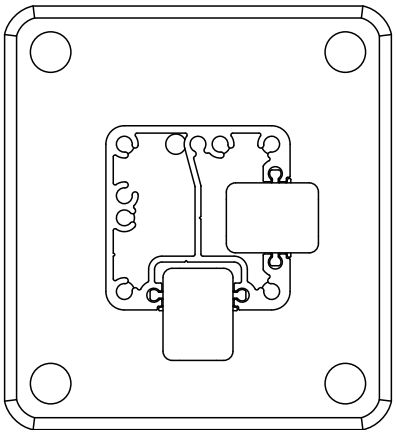

UNEX ARCHITECTURAL BARRIERS
Specifications subject to change without notice
Phone 0800 333 777 | www.unex.co.nz

AKS2 ATTACHMENT TO RECESSED POSTS : SIDE MOUNTED SITUATION

This page relates to attaching AKS2 plates via AIA inserts to APE2, APQ2 or APS2 recessed posts, for use only in situations where the post is side mounted to the substrate.

The AKS2 plate is typically used in the 'VETRO', 'SURREAL', and 'SPECTRA' styles, for the purpose of supporting the vertical weight of the glass infill.

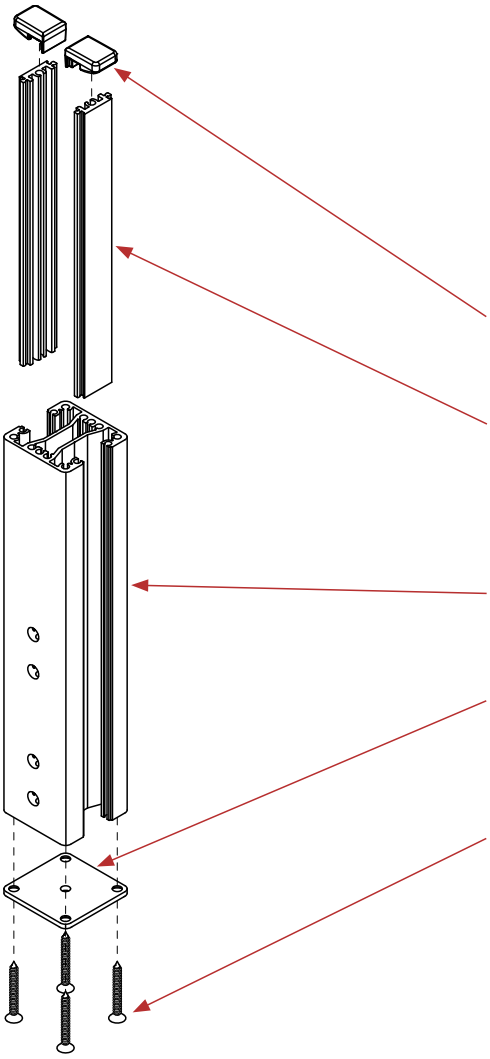

AKS2 Plate. Push fit.

AIA Insert. Slides into post recess and sits on post blank with AKS2 attached to top.

Balustrade Post. APS2 illustrated.

AAPS Post Blank. Important Note: Must be attached with 4 screws as illustrated.

FV10-45.T1 Screws. Always ensure full thread engagement. Do not remove the screws once they have been inserted.

CROSS SECTION

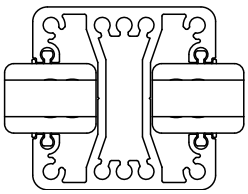

AKSV ATTACHMENT TO RECESSED POSTS : STAIR TOP MOUNTED SITUATION

This page relates to attaching AKSV plates via AIA inserts to any recessed post (e.g. APQ2, ...etc), for use only in situations where the post is top mounted to stair treads via a base plate, with vertically sloping glass panes (40° maximum stair slope).

The AKSV plate is typically used in the 'VETRO' and 'SPECTRA' styles, for the purpose of supporting the vertical weight of the glass infill. An SBC should be positioned centrally on top of the plate to provide a setting block for the glass infill.

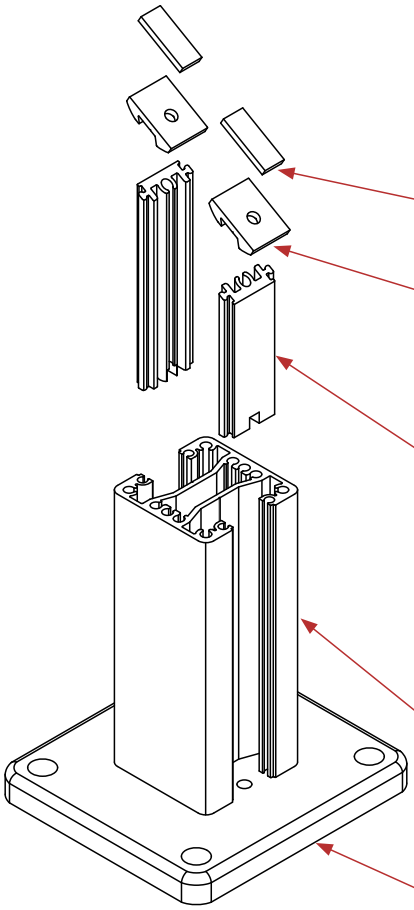

SBC Setting Blocks.

AKSV Plate with grove on underside for attaching to AIA insert. Can be used on up to 40° maximum slope. Attach with small amount of suitable adhesive (e.g. Terostat MS 930 or MS 939).

AIA Insert. Slides into post recess and sits on base plate. Top of extrusion is cut at angle to suit stair slope with AKSV mounted on top. Lengths of insert on either side of post will need to vary to allow for the lower edges of the glass panes to align.

APS2 Balustrade Post (Illustrated)

BSRF BASEPLATE (Illustrated)

CROSS SECTION

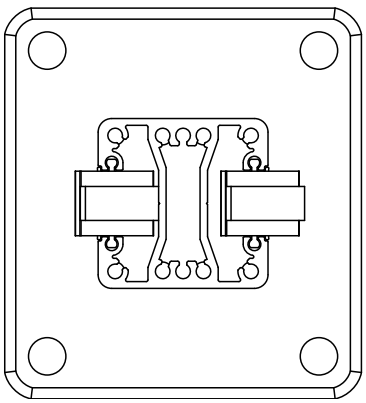

BASEPLATE-TO-POST CONNECTIONS AND POST DRAINAGE (CONT.)

This page describes the method of connecting Flat Base-plate types to posts with internal screwports. The illustration is of typical components only.

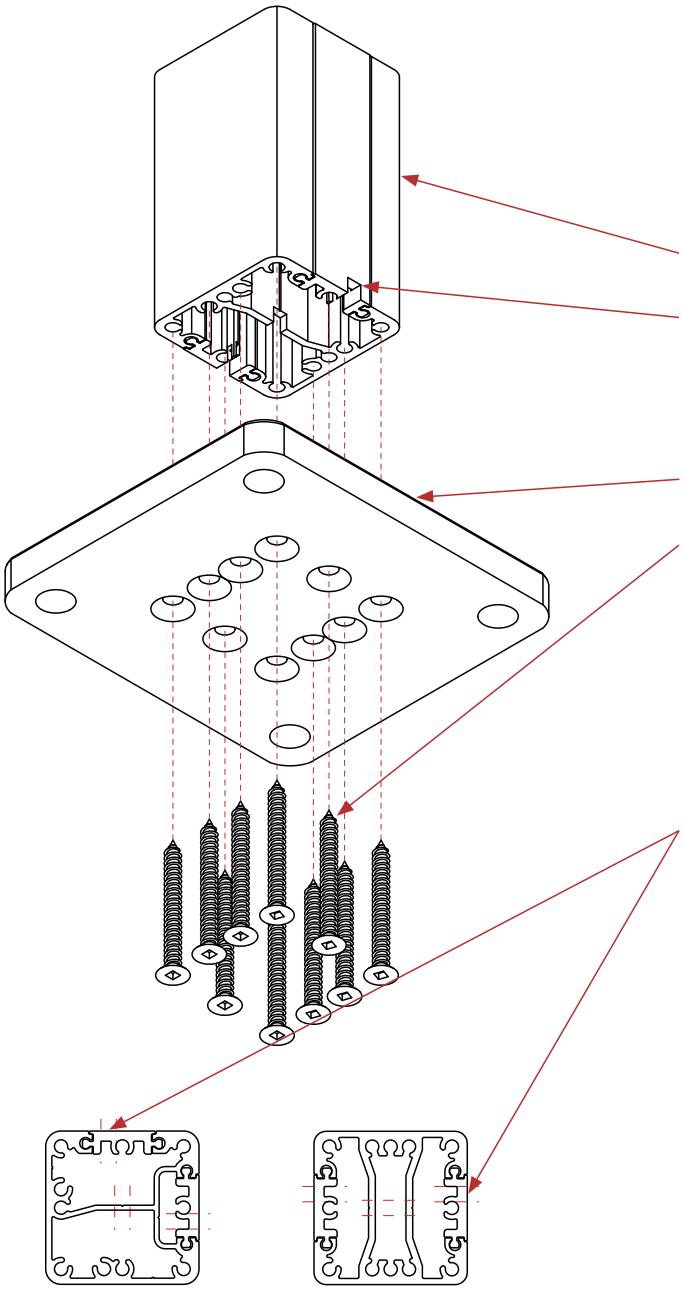

BALUSTRADE POST

DRAINAGE HOLE
Important Note: Mill out two drainage slots at baseplate level. Slots to be a minimum of 5mm wide x 5mm high.

BASEPLATE

FVHT10-50.T1 FASTENERS
Self tapping stainless steel countersunk screws supplied by UNEX. Use of other screws is strictly not permitted and invalidates all Producer Statements and Warranty. Insert screws in all available screwpipes with a power screwdriver, until tight.

DRAINAGE HOLES
For the APE2, API2, APQ2 and APS2 Posts mill an extra 5mm wide x 5mm high slots in the internal walls, as illustrated by the dashed lines.

APQ2 POST DRAINAGE

APS2 AND APE2 POST DRAINAGE

SIDE FIXED POST CONNECTIONS AND POST DRAINAGE (CONT.)

This page applies to recessed series of posts where they are side fixed to timber edge joists in accordance with the Fixing Specifications, which should be referred to for further details. Posts fixed according to these specifications shall be configured as shown in the illustration below. Note that fasteners shown are diagrammatic only, refer to the fixing specification.
In all cases, diameters of holes for fasteners through the post should not exceed the fastener diameter by more than 1.0mm.

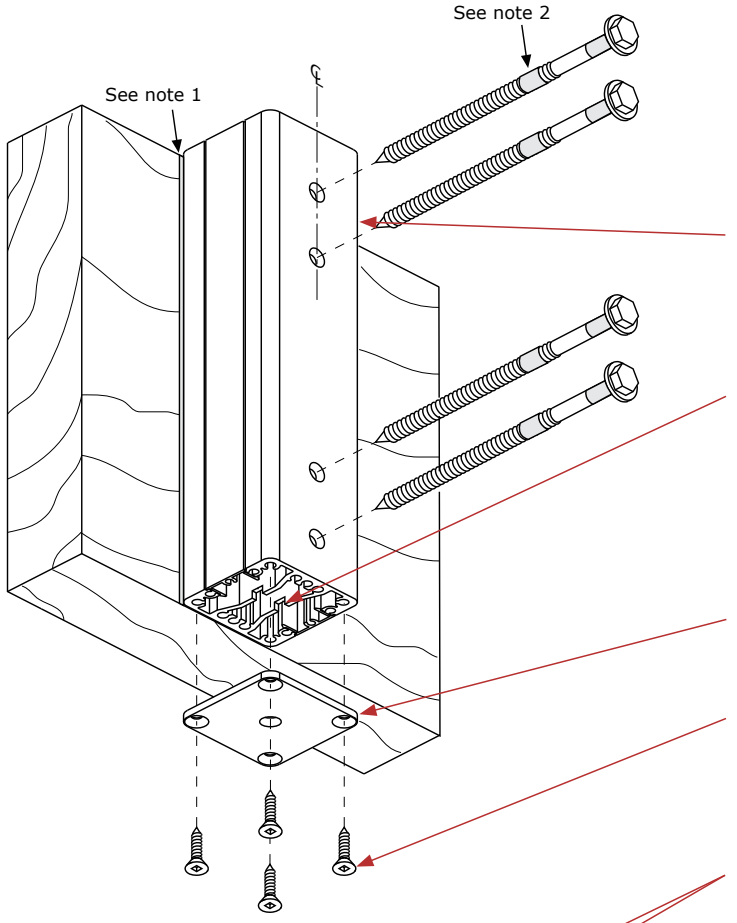

BALUSTRADE POST
APS2 (illustrated) or APE2 Posts

DRAINAGE HOLE
Important Note: Mill out two drainage slots in post webbing at post blank level. Slots to be a minimum of 5mm wide x 5mm high.

POST BLANK

TYPICAL FASTENERS
FVHT10-50.T1 Self tapping stainless steel countersunk screws.

DRAINAGE HOLES
For the APQ2 Post mill an extra 5mm wide x 5mm high slot in the internal cavity, as illustrated.

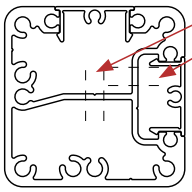

APQ2 POST
DRAINAGE

B2 DURABILITY REQUIREMENTS OF NZBC

The following notes outline steps that must be taken to satisfy Clause B2 of the NZ Building Code.

1. In most balustrades situations a separation barrier should be made between the balustrade post and the deck, using Neoprene gasket or other similarly durable material. UNEX Codes; SG24-12 is 24mm wide, SG36-12 is 36mm wide for VPM2 posts, SG42-12 is 42mm wide for 50mm wide posts, and SG50-12 is 60mm wide posts. These products may also assist with water-proofing issues.
2. Fasteners should be wrapped in Teflon tape, UNEX Code TTAM, wherever they may end up in contact with unprotected aluminium surfaces, such as where holes are drilled in the post.

SIDE MOUNTING USING DKG2 GUTTER BRACKETS

This page relates to side-mounting posts using the DKG2 gutter bracket. Minimum joist size required is 190mm.

Attach DKG2 gutter bracket to the fascia prior to the drip edge or soffit beneath being installed. The maximum distance for the finished deck surface to the underside of the baseplate should not be more than 100mm. M8 coach screws should be a minimum of 30mm from the edges of the joist. Ensure any cavity behind the fascia is packed solid at the DKG2 positions. Use SG24 Neoprene gaskets as illustrated, and seal holes and fixings as required.

Once the deck construction and membraning etc is completed, but prior to the gutter installation, install the balustrade using the fasteners illustrated below.

Once the balustrade installation is complete the gutter can be installed. NB - careful selection of the gutter system will minimise the visibility of the DKG2 bracket.

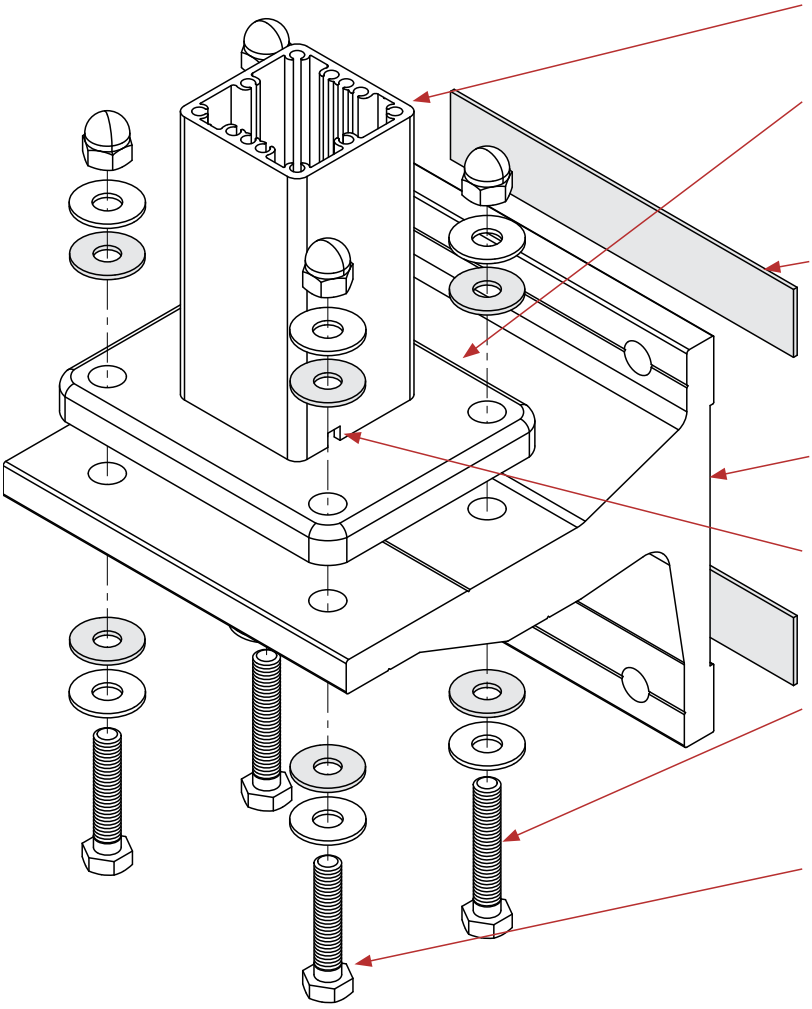

VPH2 (illustrated), VPE or VPM2 post.

BSMF (illustrated) baseplate for VPH2 and VPE post. Use BMMF baseplate for VPM2 post.

SG24 series of Neoprene gaskets to enhance durability requirements for NZBC B2. May also be required to aid with water-proofing issues.

DKG2 Gutter bracket.

Drainage holes. Mill out two drainage slots at baseplate level. Slots to be a minimum of 5mm wide x 5mm high.

FB8-45S Bolt sets. 2 per baseplate. Ensure polymer washers are against aluminium surface.

FB8-40S Bolt sets. 2 per baseplate. Ensure polymer washers are against aluminium surface.

CORNERS - GENERAL METHODS

This section describes preferred methods of fabricating balustrades at corners. The angle of change in direction is referred to as the Horizontal Angle (HA), and is the preferred form of expressing corner angles. The Horizontal Angle may be calculated as the difference between 180° and the Internal Angle.

There are 4 main methods of fabricating at corners; each with it's own application. They are summarized below (More detailed information given on the following pages).

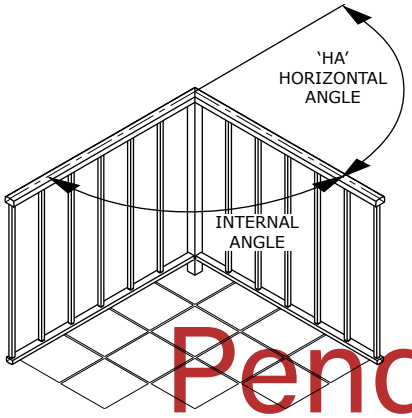

FIG. 1

1. SUPPORTED CORNER JOINT

The Top Rail mitres over the post (Fig. 1). Rails abut adjacent or opposite post faces of square posts, depending on the angle.

APPLICATION
- Standard method for UNEX Balustrades

Pending – Please contact UNEX Systems at info@Unex.co.nz or 0800 333 777.

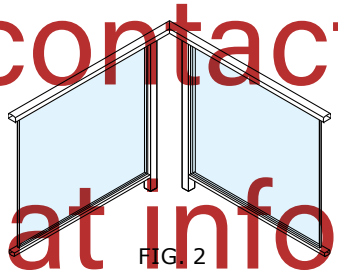

FIG. 2

2. CANTILEVERED CORNER JOINT

The Top Rail is supported by a post on either side of the joint (Fig. 2). Lower Rails terminate at the posts, which are relatively close together. Take care gap between posts does not exceed the permitted maximum.

APPLICATION
- For posts fixed to sides of decks, especially with non-90º corners

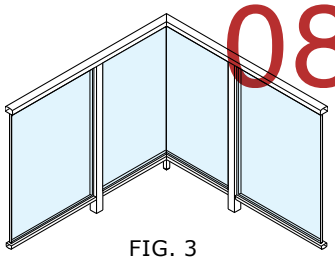

FIG. 3

3. SUSPENDED JOINT

No post in corner, with a half panel (approximately) either side of the joint (Fig. 3). The Lower Rail generally requires an additional support, plus an internal jointer.

APPLICATION
- For applications where the DKG fixing Bracket method is used.
- Can be a satisfactory alternative, to suit manufacturing, or aesthic reasons.

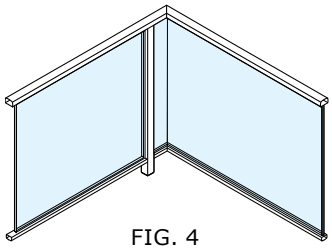

FIG. 4

4. OFFSET CORNER JOINT

Similar to Method 1, except the mitre joint in the Top Rail is to one side of the Post (Fig. 4). The Lower Rail will require to be jointed.

APPLICATION
- Used only in special situations.

EPOXY-SET ANCHOR STUDS - INSTALLATION SPECIFICATION

1. GENERAL

This is a specification for fixing Stainless Steel studs into structural concrete i.e.- FE8 and FE10 studs. The method used throughout this manual utilizes the Epcon C6 system, and must not be substituted with other epoxies or chemset injection methods without an independent structural assessment of its adequacy to carry the design loads. Note that the Epcon C6 system may be sold under other names in countries other than New Zealand.

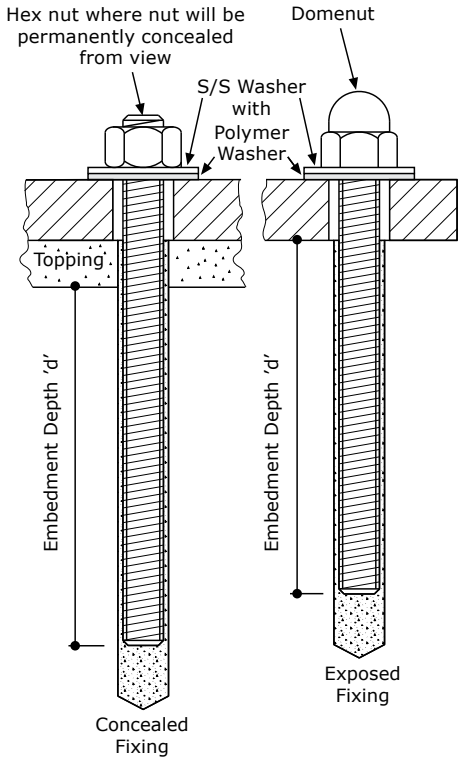

2. MATERIALS

Studs shall be threaded 316 stainless steel studs having a minimum yield stress of 400MPa and a minimum tensile stress of 700 MPa (Grade 70). Typical designations are FE8-105 = an 8mm diameter stainless steel threaded stud of 105mm overall length. Washers, nuts and dome nuts shall be stainless steel and separated from baseplate with a ploymer washer.

3. FIXING MATERIALS

- Cartridges: (TEC2) of Epoxy resin. 1 Cartridge does approx 56 FE8-105 studs or 40 FE10-115 studs.
- Disposable Nozzles: (TEN2) Allow at least 2 nozzles per cartridge.
- Dispensing Handgun: (TEG2)
- Hole Brushes: (TEB)

4. EDGE DISTANCES

Studs must not be installed closer to the edge of the structural concrete, excluding any thickness of plaster or finishing, than shown on the Fixing Specifications in Chapter 4. Where no edge distance is stipulated use the following minimum distances:- FE8 – 35mm, FE10 – 40mm

5. PROCEDURE

5.1. For M8 studs, drill Ø10mm holes. For M10 studs, drill Ø12mm holes. Drill all holes with a carbide tipped drill. Check slab and topping thickness when choosing stud length. Drill holes approx 10mm deeper than stud depth.

5.2. Hole Cleaning: This procedure is very important for successful adhesion and must be carefully carried out.
(a) Blow dust and debris from hole using oil free compressed air with a tube "end fitting" or the TEW hand operated blower. In either case, insert tube to bottom of hole before blowing.
(b) Brush the hole sides thoroughly.
(c) Blow the hole clean a second time.

5.3. Place balustrade in its final position before injecting resin, ensuring posts are vertical. Ensure studs are on-hand with domenuts and washers pre-attached, as resin may set very quickly once dispensed. Studs should initially protrude 4-5mm for M8 studs, or 5-6mm for M10 studs, into domenuts.

5.4. Remove cartridge cap, attach nozzle. (Retain the cap) Dispense resin to waste until it is evenly mixed to correct colour (see colour sample supplied with cartridge). Insert nozzle into hole and dispense resin. Due to possibility of air pockets, the only reliable indicator of sufficient resin in hole is to insert stud and watch for some surplus resin to be forced from the hole. Wipe surplus resin off immediately.

5.5. As each hole is resin injected, insert the stud with a slow twisting motion, before injecting the next hole. Do not pause more than 2 minutes during injection or a new nozzle may be required. Cap cartridge after use. Do not allow loads on balustrade, install glass, or tighten nuts, until fully cured. Refer to curing times on cartridge.

5.6. Do not install studs if temperature is less than 5°C. In all events carefully read and adhere to all instructions contained on the product packet etc.

FABRICATION GUIDE FOR SEMI-FRAMELESS GLASS BALUSTRADES STYLES

APPLICATION

This Installation Guide covers the general fabrication of all of UNEX's semi-frameless glass balustrade styles. These consist of: Vetro and Spectra styles with side rails of either ART, PRR, VRE, VRR, or VRT. Refer to Table 1 for a summary of pages.

TABLE 1 - PAGE GUIDE SUMmARY FOR INSTALLATION GUIDE	
GENERAL FABRICATION GUIDE	INSTALLATION GUIDE (steps 4, 5, 6 & 7 where applicable)
Vetro & Surreal (steps 1, 2, & 3) Pages 136 - 138	Vetro & Surreal Pages 139 - 141

This Guide is intended only to cover details applicable to a common and straightforward deck configuration. For any other situation, or for details not covered below, contact to UNEX.

1. BALUSTRADE DESIGN

This section covers the measuring and design of the balustrade.

1.1 SITE MEASURE
Refer to Pages 110 and 111 for a guide of appropriate measurements that will need to be taken from the site.

1.2 BALUSTRADE SPECIFICATIONS
Ensure adequate instructions have been received from customer to ensure the balustrade is designed to New Zealand Building Code requirements. Such details could include; fixing methods, design wind speeds, building class designations, barrier heights, maximum opening widths, etc.

1.3 POST SPACINGS
By choosing the lesser "Maximum Post Centres" value from the Style Specification (Chapter 3) and the Fixing Specification (Chapter 4), determine the maximum post centres relevant to this project. Any variation in the balustrade height caused by deck falls must be taken into account for this step. Interpolate between values on the specification tables where necessary.

1.4 OVERALL CENTRELINE DIMENSIONS
The Overall Centreline (OCL) is the measurement of all balustrade runs in a continuous line, measured along the balustrade centreline (C) to each mitre, and to the centre of each end post (see Fig. 1 on Page 137)

From the site measurements, determine the OCL of the balustrade, taking into account the balustrade centreline position and any length adjustments necessary due to corners in the deck (see Fig. 1 on Page 137). Also take into account any clearances needed where the balustrade meets a wall face.

1.5 PANEL WIDTH DIMENSIONS
The Panel Width (PW) is a dimension between the faces of adjacent posts, measured along the rail centreline (see Fig. 1 on Page 137).

From the OCL, and the maximum post centres determined in step 1.3, calculate the PW of each panel (see Fig. 1 on Page 137), taking into account the post width and the "PD" Post Deduction.

(continued on following Page)

FABRICATION GUIDE FOR SEMI-FRAMELESS BALUSTRADE STYLES - (CONT'D)

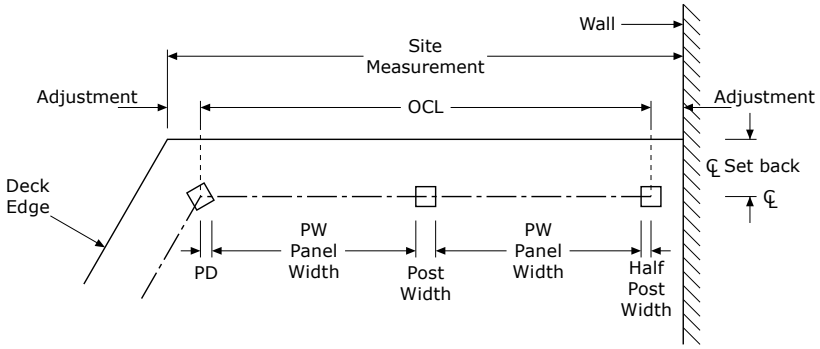

FIG. 1

1.6 VERTICAL DIMENSIONS
Calculate the balustrade heights, post lengths and lower rail positions to ensure the balustrade will meet all New Zealand Building Code requirements, taking into account any deck falls and changes in deck levels.

The relevant vertical dimensions page in this chapter will provide some useful formulae to calculate this data.

1.7 MATERIAL REQUIREMENTS
Optimise the various member types into available purchasing lengths, taking into account the additional lengths needed for mitre points, saw cuts and saw clamps etc. Any joins in the Outer Top Rail should be ¼ of the way across a panel. Produce a Summary of materials required and order from UNEX.

2. FABRICATION

This section covers the cutting of the members to the required length, and the drilling of most holes required Ensure staff are provided with tools and machinery that are safe, and that they are given full instructions in how to use them.

2.1 CUTTING TO LENGTH
Cut all members to their required length, as calculated in step 1.7. Ensure all mitres are cut at the correct angle and orientation. Remove all burrs with a light file.

2.2 DRILLING OF HOLES
Drill 5.5mm diameter holes in the Top Inner Rail for attaching these rails to the posts. Take care on mitres.

Drill 3.3mm diameter top rail rivet holes in Top Inner Rail at the spacing's indicated on the appropriate assembly specification in Chapter 5. Countersunk carefully with 5.5mm diameter drill bit from the underside (Not applicable to the 'Vetro' nor 'Surreal' styles with no top rails).

De-burr all holes as required.

2.3 PROVISION FOR DRAINAGE
If the balustrade is for exterior use provide drainage holes at the base of all posts.

3. PRE-ASSEMBLY

This part of the installation process would normally be completed in the factory, prior to site installation.

3.1. BASEPLATE ATTACHMENT
For top mounted posts, attach the baseplates using 10g x 45mm CSK (FVHT10-50.T1) screws sourced from UNEX. Use of other screws invalidates all warranty and Producer Statements.

For side mounted posts, attach base blanks using 10g x 19mm CSK (FV10-19.T1) screws.

3.2. LOWER SUPPORT BRACKET (AKS2 & AKSV) ATTACHMENT
Push fit AKS2 bracket to top of AIA insert in accordance with Pages 128 to 130.

(continued on following Page)

FABRICATION GUIDE FOR SEMI-FRAMELESS BALUSTRADE STYLES - (CONT'D)

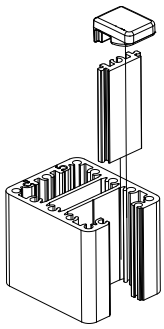

FIG. 2

3.3. LOWER INFILL BLANK (AIA)
Insert the lower AIA insert with the AKS2 support brackets attached on all posts. End posts will require an AIR infill on one side, inserted for the full height of the post glazing recess.

3.5. RETAINED GLAZING GASKETS
Install the correct retained glazing gaskets. On a typical installation this would be SRG40 on the outside of the post. Refer the relevant Style Specification in Chapter 2 for the appropriate gasket.

APPLICATION

The following sections cover the site installation of the UNEX's 'Vetro' & 'Surreal' semi-frameless balustrade style. Refer to the general fabrication guide on Page 136 to 138 for all sections prior to section 4 below.

4. ATTACHMENT TO BUILDING

This section covers attachment of the balustrade to the deck. Prior to commencing, ensure the Builder has completed all work necessary to support the balustrade and that all nogs and solid blocking for the fixing of posts are in place. It is essential that posts are fastened in accordance with the Fixing Specification selected from Chapter 4, for which the post spacing has been designed. For top-mounting the Vetro style we recommend always using 4 substrate fasteners per baseplate to provide lateral stability, even if 2 fasteners are structurally adequate.

4.1. NON-90° CORNERS
Non-90° corners greater that 5° that are being glazed with SRD gaskets, may require the glass to be inserted prior to fixing the posts. Insert the glass through the recess at 90° to the post face, then pivot the glass around to the desired angle and glaze into adjacent post.

4.2. POSITIONING
Ensure the appropriate retained glazing gasket is on the outside of the posts glazing recess (see Page 119).

On concrete decks ensure outer fixing is not less than the minimum edge distance (e) shown on the relevant fixing specification. On timber decks ensure the fixings are directly over the centre of the support joists or nogs.

Always ensure that two adjacent APQ2 corner posts have one deep and one shallow glazing cover facing each other see Fig. 1 (i.e. do not have two shallow glazing covers facing each other, see Fig. 2).

INSTALLATION GUIDE FOR 'VETRO' & 'SURREAL' STYLE BALUSTRADES

FIG. 1

FIG. 2

4.3. FASTEN POSTS

Secure all posts to the substrate. Refer to the relevant Fixing Specification pages in Chapter 4 for more details on the selected fixing method. A string line should be used to ensure the posts are aligned. The fixings should finally be firm, but not over-tightened. Seal fastener holes as necessary. Ensure polymer washers are inserted between all stainless steel washers used for the substrate fasteners and the aluminium baseplate (top-mounted type) or outside face of the posts (side-mounted type).

Where balustrades are side fixed to the face of the deck, take into account the effect of any fall in the deck to ensure the top rail will be horizontal and the required minimum height will be achieved at all positions. A strip of neoprene gasket (SG42-12) should be placed between the side of the post and the adjacent substrate to provide a separation.

Check posts for verticality and pack posts or baseplates (whichever is applicable) to achieve this.

5. FINISHING

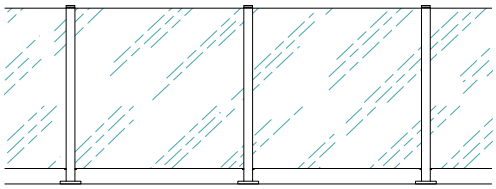

This section covers the finishing touches of the aluminium frame ready for glazing;

5.1. CLEANING

Clean the balustrade frame with a soft sponge and a mild household detergent mixed in warm fresh water. Remove any debris from the deck, paying particular attention to any iron filings that may cause rust spots.

(continued on following Page)

INSTALLATION GUIDE FOR 'VETRO' & 'SURREAL' STYLE BALUSTRADES - (CONT'D)

6. GLAZING

This section covers the measuring and installation of the glass panes. Ensure the correct thickness of toughened glass is used. Refer to the style specification in section

6.1. MEASURE GLASS

It is generally advisable for aluminium framework to be completely installed prior to ordering glass. The exception to this is where the glass intersects the post at angles greater that 5º, as outlined in step 4.1. Suggested glass sizing for square panels between end and in-line posts only, or combinations of these are:

Glass height = Refer to the Vertical Dimensions in Chapter 5. Ensure finished height of the balustrade will meet the New Zealand Building Code requirements.

Glass width = Opening Width, plus applicable Glazing Covers as shown on Table 1. Refer to Fig. 3.

Note: Exposed edges should be Flat Polished.

For sloping panes, the use of a full sized template made from rigid material is recommended.

TABLE 1 - GLASS WIDTHS FOR VARIOUS POST COMBINATIONS (see Fig. 3)

Post A		Post B		Glass Width
Post Type	Glazing Cover	Post Type	Glazing Cover	
APE2	18	APE2	18	Opening Width + 36mm
APQ2 (Corner Recess)	12	APE2	18	Opening Width + 30mm
APS2	13	APS2	13	Opening Width + 26mm
APQ2 (Main Recess)	22	APS2	13	Opening Width + 35mm
APQ2 (Corner Recess)	12	APS2	13	Opening Width + 25mm

(1) Careful measuring is required.

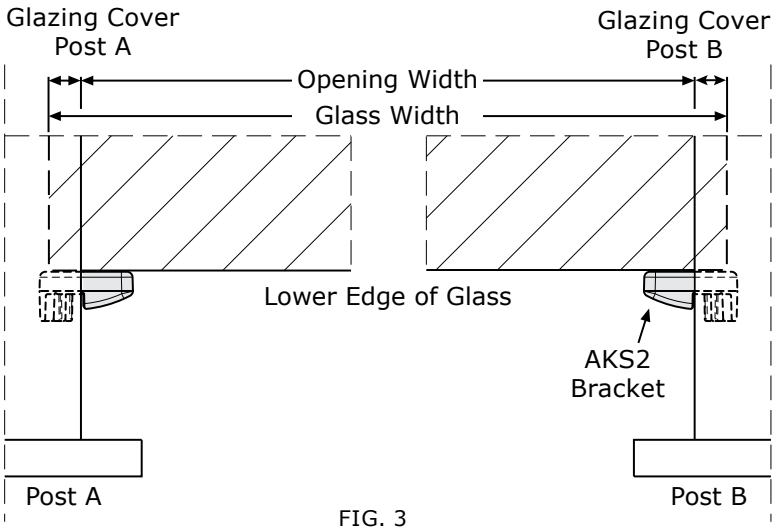

FIG. 3

(continued on following Page)

INSTALLATION GUIDE FOR 'VETRO' & 'SURREAL' STYLE BALUSTRADES - (CONT'D)

6.3. INSTALL GLASS
Glass is to be installed by sliding down from above before the post cap is installed. Install ACPR post cap onto the top of post, which will need to be glued in position. Cut the inside lower glazing wedge, leaving slightly over length. Ensure the fins of glazing gaskets are inserted towards the face of the glass. Compress gaskets lengthwise during insertion. Use a glazier's roller to ensure a neat finish.

For situations that need to be 'wet glazed' into the recessed posts (eg adjacent to gates, non 90° corners, etc), this should be done with a suitable silicone product in accordance with good industry practice.

Refer to the table in chapter one for the appropriate glazing gaskets used for various glass thicknesses.

6.4. CLEAN GLASS
Remove any glazing stickers and clean the glass with a suitable cleaner.

IMPORTANT NOTES

A. All assembly fasteners must be supplied by UNEX as they are specially treated to enhance their durability to meet the New Zealand Building Code requirements.

B. A balustrade should not be attached to a substrate that is not adequately designed or constructed for the service loads that will be placed upon it by the balustrade. Any issue, problem or defect etc must be remedied prior to balustrade installation.

C. Any waterproofing issues are outside the scope of this guide. Advice should be sought from waterproofing specialists in such circumstances.

D. Ensure the homeowner or purchaser is given a copy of the Care & Maintenance instructions.

UNEX LOADING CLASSIFICATION

Below is an extract from AS/NZS 1170:2011.1:2002, a standard which is cited in the NZBC. This table gives the minimum imposed actions on barriers for various occupancy types. To the right hand side of this table are the applicable UNEX Loading Classifications (ULC) which are stated in the specifications contained in this catalogue.

AS/NZS 1170.1:2002 TABLE 3.3
MINIMUM IMPOSED ACTIONS FOR BARRIERS

Type of occupancy for part of the building or structure		Specific Uses	Top Edge			Infill		ULC (UNEX Loading Classifi-cations)
			Horizontal kN/m	Vertical kN/m	Inwards, Outwards, Downwards kN	Horizontal kPa	Any Direction kN	
A	**Domestic and residential activities**	All areas within or serving exclusively one dwelling including stairs, landings, etc., but excluding external balconies and edges of roofs (see C3)	0.35	0.35	0.6	0.5	0.25	**N03R**
		Other residential (see C3)	0.75	0.75	0.6	1.0	0.5	**N07R**
B, E	**Offices and work areas not included elsewhere including storage areas**	Light access stairs and gangways not more than 600mm wide	0.22	0.22	0.6	N/A	N/A	**N02**
		Fixed platforms, walkways, stairways and ladders for access	0.35	0.35	0.6	N/A	N/A	**N03C**
		Areas not susceptible to overcrowding in office and institutional buildings also industrial and storage buildings	0.75	0.75	0.6	1.0	0.5	**N07C**
AREAS WHERE PEOPLE MAY CONGREGATE								
C1/C2	**Areas with tables or fixed seating**	Areas with fixed seating adjacent to a balustrade, restaurants, bars. etc.	1.5	0.75	0.6	1.5	1.5	**N15**
C3	**Areas without obstacles for moving people and not susceptible to over-crowding**	Stairs, landings, external balconies, edges of roofs, etc.	0.75	0.75	0.6	1.0	0.5	**N07C**
C5	**Areas susceptible to over-crowding**	Theatres, cinemas, grandstands, discotheques, bars, clubs, auditoriums, shopping malls (see also D), assembly areas, studios, etc	3.0*	0.75	0.6	1.5	1.5	**N30** **N20**[1]
D	**Retail areas**	All retails areas including public areas of banks/building societies (see C5 for areas where over-crowding may occur)	1.5	0.75	0.6	1.5	1.5	**N15**
F/G	**Vehicular**	Pedestrian areas in car parks including stairs, landings, ramps, edges of internal floors, footways, edge of roofs	1.5	0.75	0.6	1.5	1.5	**N15**
		Horizontal loads imposed by vehicles	Requires site specific UNEX design					

[1] N20 is only applicable where 2.0kN/m horizontal top edge load is acceptable by the Building Consent Authorities.

This page is copyright to UNEX Systems (NZ) Ltd with the exception that the copyright for Table 3.3 of AS/NZS 1170.1:2002 is held by Standards New Zealand. Permission for UNEX Systems to use it has been obtained under Copyright License 000913

engineering new zealand | ace new zealand | association of consulting and engineering | KIRK ROBERTS CONSULTING

Building Code Clause(s) B1/F2/F4

PRODUCER STATEMENT – PS1 – DESIGN

ISSUE:01

(Guidance on use of Producer Statements is available at www.engineeringnz.org)

ISSUED BY: Kirk Roberts Consulting Engineers Ltd. (Design Firm)

PROJECT NO:2130235

TO: Unex Systems (NZ) Ltd (Owner/Developer)

TO BE SUPPLIED TO: To Whom It May Concern (Building Consent Authority)

IN RESPECT OF: Balustrade styles as supplied by Unex System (NZ) Ltd (see list enclosed). Construction details are to be in accordance with the UNEX Fabricators' Manuals – Semi Frameless Glass v13.1. The maximum post spacing must not exceed the distance given in the manuals referred to above.

(Description of building works)

This statement applies to the balustrade styles listed below, as supplied by Unex Systems (NZ) Ltd.

Construction details are to be in accordance with the UNEX Fabricators' Manuals – Semi Frameless Glass v13.1. The maximum post spacing must not exceed the distance given on the UNEX Fabricators' Manuals – Semi Frameless Glass v13.1.

Kirk Roberts Consulting Engineers Ltd. holds a current Professional Indemnity Insurance policy for no less than $200,000 and have been engaged by Unex Systems (NZ) Ltd to provide design services for their UNEX balustrading styles in respect of Clauses B1, F2 and F4 of the Building Regulations. The design has been prepared in accordance with Clauses B1/VM1 and B1/AS1. The design of the load carrying members and their connections have been verified by calculations, where applicable.

I believe on reasonable grounds that subject to:

1. The balustrade is constructed such that the geometry complies with Acceptable Solutions F4/AS1. This includes the following (but not limited to): The minimum barrier height requirement, the maximum gap allowable and the avoidance of non-complying toeholds.
2. The balustrade glass is in accordance with NZS 4223 and meets Acceptable Solution F4/AS1.
3. The principal products meet their performance specification requirements.
4. The general arrangement and dimensions of the balustrade members, post spacing, fixing details and glass assembly method are in accordance with the instructions in the current UNEX Fabricators' Manuals – Semi Frameless Glass v13.1 and the above details.
5. Time limitation of this PS1 is 2 years or any code change whichever comes first.

I, Jan Jober Studnicka

- CPEng number 1013192
- and hold the following qualifications: MSc, CMEngNZ, CPEng

SIGNED BY: Jan Jober Studnicka

(Signature)..... Date: 8/02/2024

ON BEHALF OF: Kirk Roberts Consulting Engineers Ltd. (Design Firm)

Note:

- *This Producer Statement must be accompanied by the relevant Style Specification, Fixing Specification and Assembly Specification pages when submitted for Building Consent purpose.*
- *This statement has been prepared solely for the Building Consent Authority named above and shall not be relied upon by any other person or entity. Any liability in relation to this statemen accrues to the Engineering Design Firm only. As a condition of reliance on this statement, the Building Consent Authority accepts that the total maximum amount of liability of any kind arising from this statement and all other statements provided to the Building Consent Authority in relation to this building work, whether in tort or otherwise, is limited to the sum of $200,000.*

This form is to accompany Form 2 of the Building (Forms) Regulations 2004 for the application of a building Consent.

Job Number 2130235

Page 1

This is an sample PS1, compliant at the time of printing. Visit www.unex.co.nz to generate a current generic PS1.

BUILDING CONSENT APPLICATION DOCUMENTS

Following are the 5 recommended pages for submitting a Building Consent Application.

1. Fill out a PS1 Producer Statement page

2. The relevant Style Specification page

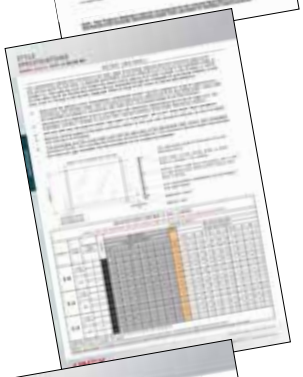

3. The relevant Fixing Specification page

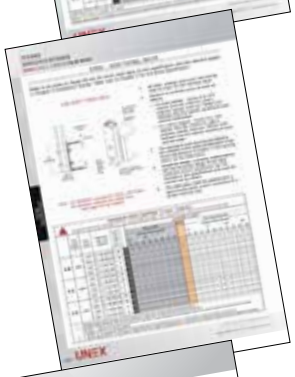

4. The relevant Assembly Specification page

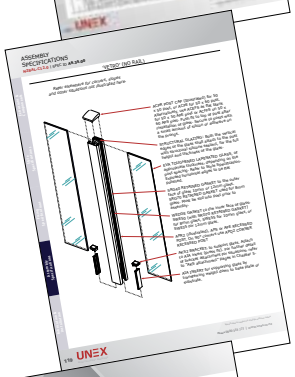

5. The UNEX Loading Classifications page

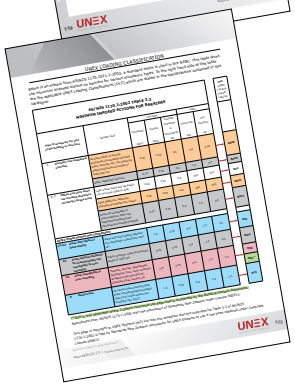

Specifications subject to change without notice