UNEX
ARCHITECTURAL BARRIERS

FRAMED GLASS

Extrusions & Components

This section includes all the Rail, Post, Baseplates, End caps, Connections, Blanks, Wallplates, Brackets and Hardware, Gaskets/Wedges and Block profiles. The technical dimensions and purpose of each item is described here.

Style Specification

Each Framed Glass Balustrade Style and the applicable components when assembled have varying span widths allowed in accordance with code requirements. This combination can be determined in this section.

Fixing Specification

Coupled with the Style Specification of each style, Fixing Specifications determine the span allowed in various wind zones with alternate methods of installation of a balustrade system to a multitude of substrates.

Assembly Specifications

This section illustrates exploded cross-sectional views of each Framed Glass Balustrade style with the most common rail types. These diagrams show how each Extrusion & Component securely connect and insert to form a UNEX system.

Fabrication & Installation

Once the maximum allowable span and assembly of a system is determined, then this section guides installers on how to fabricate each style in this manual including Vertical Dimensions and site measurement.

CONTENTS

NOTES, DISCLAIMERS AND EXCLUSIONS OF LIABILITY

1. The purpose of this manual is to provide balustrade fabricators, assemblers, specifiers, builders and installers ("The User"), the information they require for using the product for its intended purpose and within its structural and legal limitations.
2. This manual is to remain in the possession of the receiver, as intended by UNEX Systems at the time of issue. It is not to be copied, nor passed on to others other than for the purpose stated above. This manual remains the property of UNEX Systems and must be returned to UNEX Systems when no longer required or on the written request of UNEX Systems.
3. UNEX Systems must be notified of any change in the name, address or contact details of the person or company to whom this manual was issued.
4. It is the User's responsibility to ensure that the manual includes any amendments that have been issued by UNEX Systems.
5. The information contained in this manual has been compiled for New Zealand only, and must not be relied on in any other country.
6. Specialist advice must be sought from qualified sources for any information or requirement not specifically covered in this Manual.
7. Any request for specific structural design requirements outside the scope of this manual must be made in writing to UNEX Systems and include all relevant information such as substrate details, proposed fixing methods, design wind speeds, etc.
8. This manual must only be used in conjunction and compliance with all other current applicable building standards or requirements.
9. Where any specifications, requirements or information set out in this manual conflict with, or are no longer compliant with, any applicable building standards or requirement, the user of the manual must notify UNEX Systems in writing so that the appropriate specifications, requirements, or information can be provided. Without limiting paragraphs 10 to 12, UNEX Systems will not be liable for any claims if this procedure is not followed.
10. All representations or warranties (statutory, express or implied), except any which may not be lawfully excluded, are expressly excluded including, without limitation, the implied warranties of merchantability and fitness for a particular purpose.
11. To the maximum extent permitted by law, the liability of UNEX Systems to any person for any loss whatsoever incurred arising directly or indirectly from the use of this Manual, or by any error or omission in this Manual, whether arising in contract, tort (including negligence), breach of statutory duty, or otherwise, is excluded.
12. If, despite paragraph 11, UNEX Systems is found liable, then to the maximum extent permitted by law, UNEX Systems will not be liable for any indirect or consequential loss suffered or incurred by the user.
13. The laws of New Zealand apply to these notes, disclaimers, and exclusion of liability.
14. Any reference to UNEX Systems and/or UNEX in this document or Manual is a reference to UNEX Systems (NZ) Limited, its successors or assigns.

SURFACE FINISHING

INTRODUCTION

One of the advantages of Aluminium as a material is that it provides an excellent substrate for surface finishing. Aluminium is therefore the preferred choice of material where coloured coatings are required. The main coating method used is "Powdercoating". Anodizing is also available but with a much more limited choice of colour. Care and maintenance instructions for all finishes are given on Page 6. Warranties are available on extrusions for certain surface finish options. These are limited to those supplied by the supplier and/or applicator, and must be requested at the time of the order.

1. POWDERCOATING

Powdercoatings are applied as a powder, electrostatically charged to provide a uniform film thickness, followed by baking and final oven curing, resulting in a tough, smooth, and even coating. This process is performed in factory controlled conditions, and consistently gives a more uniform and superior finish compared to wet coatings. Powdercoatings also have excellent adhesion to pretreated aluminium. The use of solvents for cleaning powdercoated surfaces should be strictly avoided.

2. ANODIZING

Anodizing is an induced thickening of the natural protective oxide film on the metal's surface, and not a coating in the usual sense. The resulting film is clear, hard, extremely corrosion resistant, and capable of being coloured. Colour options are however relatively limited, with Satin (natural aluminium colour), Medium Bronze and Dark Bronze being the main colours economically available for balustrades. Some accessories, such as cast end CAPS, can not be anodized, and must be powdercoated in a coordinating colour. The depth of the anodized film can be varied to suit the application.

The use of abrasives for cleaning should be avoided as they can damage the anodic layer beyond repair.

CARE & MAINTENANCE OF UNEX BALUSTRADES

It is the Fabricators responsibility to ensure that a copy of these Care and Maintenance Instructions is made available to every purchaser of UNEX Balustrades. It is important that every building owner observes these recommendations to obtain the durability required in the NZ Building Code.

1. MAINTENANCE OF ALUMINIUM BALUSTRADES

Cleaning is necessary if the fine finish of powdercoated and anodized aluminium is to be preserved. Deterioration of the coating occurs mainly as a result of grime deposition and attack by contaminated moisture which in a coastal environment contains salt and sulphur compounds. Deposited grime and contaminations absorbs moisture like a sponge and holds it against the powdercoated and adodized surfaces. This permits attack to proceed thereby damaging the coating which cannot be restored.

- Safety barriers shall be maintained in a structurally sound condition and, where applicable, self-closing gates and other components required for the protection of children shall be kept operable. Defects should be remedied immediately once they are apparent.
- Ensure drainage holes in posts and rails are kept clear, on 6 months frequency.
- While surface finishes do not last forever, observance of these instructions will maintain their appearance and significantly extend their useful life.
- Powdercoated surfaces will lose some gloss with time. Where desired, powdercoated gloss may be enhanced with 'Dulux Gloss Up', used in accordance with the manufacturer's instructions.

CARE AND PROTECTION

Always protect the balustrades from contact with:

- Wet cement or plaster, household cleaners including bleach, paint splashes, chemicals, solvents, stains and fertilisers are possibly harmful to the surface finish. If contact does occur, remove the contaminant immediately and wash as described below.
- Copper, brass, lead, mild steel, CCA treated timber, cement or concrete less than 1 month old, and water which has contacted any of these substances.

GUIDELINES FOR ALUMINIUM BALUSTRADE CLEANING

It is recommended most residential balustrades in mild conditions or interior installations be cleaned at least every once a year. In areas where pollutants are common such as industrial or geothermal areas, and for all sites within 1 km from the sea or in any sea spray zone identified by Section 4.2 of NZS 3604:1999, cleaning must be carried out more frequently as required, but not less than every three months.

PROCEDURE FOR ALUMINIUM BALUSTRADE CLEANING

a. Gently remove loose deposits with a wet sponge. Do not dry dust, or the surfaces will be scratched. Remove any moss growth, and ensure that all drain holes are unblocked, particularly those at the base of the posts and underside of lower rails.
b. Using a soft brush and a mild household detergent in warm fresh water, clean the surface to remove any dust, salt, or other deposits. Pay particular attention to any areas not washed naturally by the rain. In the instance of stubborn stains, use ONLY Isopropyl alcohol (IPA) or methylated spirits to help remove these.
c. Always rinse well after cleaning with fresh water so that the contact time of the cleaning solution is kept to a minimum. Hosing must be avoided under all circumstances. Rinse with a chamois, or a soft cloth.

IMPORTANT NOTES

- Never use scrapers, emery paper, sandpaper, steel wool or other highly abrasive materials on any aluminium, nor acid or alkaline cleaners, or any chemical cleaners, as they can damage the anodised or powder coated finish.
- Be careful with emulsion cleaners as they too can attack anodised coatings – use only in consultation with companies who are specialists in anodised aluminium. Solvents, household cleaners, bleaches, and abrasive cleaners are possibly harmful to the surface finish and must not be used.
- All coated aluminium surfaces should avoid contact with acids, alkalis, mortar based products and solvents.
- Sunscreen can leave permanent marks on aluminium. Use gloves when handling, and, if affected, wash the sunscreen off immediately with warm, soapy water.

2. MAINTENANCE OF GLASS

Glass needs to be periodically washed to remove visible dirt and to prevent accumulations of dirt from bonding to or attacking the surface. Glass should be washed frequently as is needed to keep its appearance acceptable. In some locations, and for some building owners, this cleaning will be more frequent than for others.

GUIDELINES FOR GLASS CLEANING

- Glass should be cleaned using only cleaning materials which are free of grit and debris (to avoid scratching and marking of the glass surface).
- Only detergents and cleaning solutions which are recommended for cleaning glass should be used. Mild detergents are preferable.
- Extra care is necessary where high performance and coated glass products are installed as the coated surface can be susceptible to stains and scratches.
- Hand cleaning of the glass surface to visibly remove accumulated dust or fingerprints can be accomplished using a number of different glass cleaning products. Recommended cleaning product is Mr Muscle® Surface and Glass. For screen printed glass, use only neutral cleaning products on the printed surface. The use of ammonia-base and alcohol-base glass cleaners are not recommended because these products tend to leave visible streaks. The exterior surface of the glass is not coated so cleaning can be undertaken in the same fashion as ordinary glass.
- Glasses with a Low E or reflective coating need to be treated with special care when cleaning to ensure the coating is protected and not damaged once cleaned. Do not use razor blades, steel wool or other metallic objects on the coated surface.

PROCEDURE FOR GLASS CLEANING

a) While cleaning ensure jewellery and watches are removed and gloves should be worn to avoid scratching the surface of the glass. scratches that occur from foreign objects will be permanent and are not repairable.
b) Flood the glass surface with water and the spray-on cleaning solution or with a cloth saturated with the cleaning solution. Be generous with the amount of solution applied.
c) Scrub the wetted surface with a clean, lint free towel or cloth.

It is recommended most residential balustrades in mild conditions or interior installations be cleaned at least every 6 months. In areas where pollutants are common such as industrial or geothermal areas, and for all sites within 1 km from the sea or in any sea spray zone cleaning must be carried out more frequently as required, but not more than every three months.

PROCEDURE FOR STAINLESS STEEL CLEANING

a) Use a soft nylon brush to remove accumulated dirt.
b) Wash with warm water, mild soap or detergent.
c) Follow with a clean-water rinse.
d) Wipe dry with a soft cloth, disposable wipe, or air blower.

PROCEDURE FOR STUBBORN DIRT AND STAINS

e) Use a soft nylon brush to remove accumulated dirt.
f) Use non-scratching abrasion powders such as typical household cleaners.
g) For more aggressive cleaning a small amount of vinegar can be added to the powder.
h) These can be used with warm water, soft bristle brushes, sponges, or clean cloths.
i) Follow with a clean-water rinse.
j) Wipe dry with a soft cloth, disposable wipe, or air blower.

IMPORTANT NOTES

- Avoid any contact with carbon steels or iron.
- Use cleaners showing "Suitable for Stainless Steel"
- Do not weld, cut, drill, or grind carbon steel near stainless steel.
- Avoid contact with concrete detergents and chloride solutions.
- Do not use steel wool or other abrasive scrubbing pads.
- Never use chloride cleaners, abrasive cleaners, all-purpose cleaners, or chloride bleach cleaning products on stainless steel.

ABOUT THIS ADVICE

This information is offered as a general guide only and specific advice should always be sought from a reputable glazier or professional window cleaner before undertaking any cleaning. This guidance does not preclude the use of other methods, materials or equipment. However, the user should undertake careful evaluation and make suitable enquiries of the suitability of alternative methods, materials or equipment, before using them.

CURVED DECKS

UNEX Balustrades can be installed on curved decks using a **faceted** method. This involves forming the curve through a series of straight sections, with the balustrade rails set at slight angles to approximate the curve. Tighter curves generally require closer post spacing to achieve a smoother appearance.

Faceting is the only method supported by UNEX for curved deck installations, and it is compatible with all styles in the UNEX range. This approach offers a practical and cost-effective solution for curved layouts.

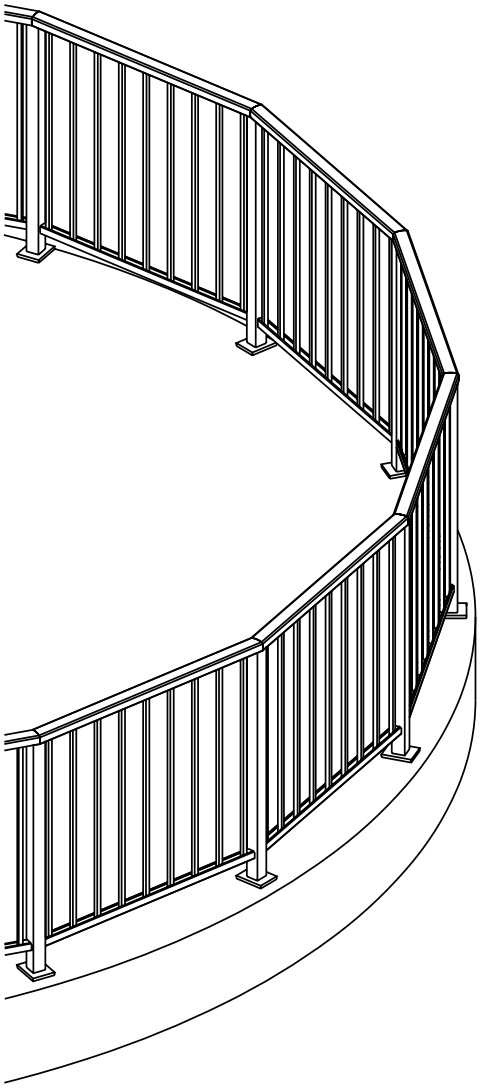

(continued on following Page)

NZ BUILDING CODE COMPLIANCE

GENERAL

The New Zealand Building Code (NZBC) provides mandatory performance criteria for balustrades. The UNEX Balustrade System has been designed to make it easy for Specifiers to ensure that balustrade compliance is achieved. The main building code clauses which affect balustrades are as below. Some areas of the code may not necessarily affect every balustrade application.

B1: STRUCTURE - Structural strength and stability
B2: DURABILITY - Durability requirements
C2: MEANS OF Escape - Fire escape routes
D1: ACCESS ROUTES – Handrails
E2: WATER EGRESS – Water proofing
F2: HAZARDOUS BUILDING MATERIALS - Glazed balustrades
F4: SAFETY FROM FALLING - Barrier heights, opening sizes etc
F9: RESTRICTING ACCESS TO RESIDENTIAL POOLS

The performance criteria contained in the Building Code stipulates what is to be achieved, without prescribing how it is to be achieved. For more specific guidance, the MBIE issues 'Approved Documents' which provide detailed methods of establishing NZBC compliance, in the form of 'Verification Methods' or ' Acceptable Solutions'. While other criteria may be acceptable, the onus is on the designer to demonstrate adequate compliance with the prime requirements of the NZ Building Code. A brief summary of the Building Code clauses relevant to balustrades and handrails, is found on the following pages. A Producer Statement is available on www.Unex.co.nz.

Disclaimer: Note that the information provided on the Building Code and other regulations is provided in good faith, and as applicable at the time of writing. However it is provided on a 'no liability' basis, and as these documents are up-dated from time to time, the latest documents should be consulted for full information and checked for subsequent amendments.

View The NZBC online at
www.building.govt.nz

CLAUSE B1 - STRUCTURES

Balustrades are required to be capable of resisting certain loads. These include 'Live Loads' such as being induced by persons leaning on the balustrade. Live Loads vary with the application, eg.: Residential, Public etc. Balustrades with glass or other solid or semi-solid infill panels also need to withstand 'Wind Loads', which will vary with the location and other factors.

UNEX Balustrades have been designed to withstand the various human impact and wind loads as stipulated in the NZBC. This will be achieved if the balustrade heights and spacings between clamps or other fixing points, do not exceed the maximum given for the particular balustrade style's specification and method of fixing as given in Chapters 2 and 3. The maximum post spacings should be determined from these Chapters by the building designer and checked by the fabricator. The building designer must also ensure that an appropriate design of the substrate to adequately resist the loads imposed by the balustrade for the particular spans and fixing methods chosen is included in the drawings and specifications.

HUMAN IMPACT LOADS

These vary with the designated use of the building they are situated in, and are detailed in the loading standards cited in B1/VM1 of the NZBC: AS/NZS 1170.1:2002 Structural Design Actions. For reference, the various loadings have been designated with a "Loading Class" in the UNEX specifications. When using Chapters 2 and 3, the Loading Class must firstly be selected from the table on Page 81. Then the maximum post spacings can be determined for this class (along with the designated wind load if applicable), as indicated on the tables given in Chapters 2 and 3.

WIND LOADS

Balustrades with solid infill such as "glazed" styles must also withstand wind loads imposed, to the degree as stipulated in the New Zealand Building Code. These loads are defined by the Design Wind Speed for the particular project.

(continued on following Page)

CLAUSE B2 - DURABILITY

The New Zealand Building Code requires all balustrading to be sufficiently durable so as to remain functional for certain specified periods of time. These periods are given in the Acceptable Solution B2/AS1, which indicates a 'serviceable' durability requirement of 50 years for balustrade posts and top rails, and 15 years for infill members. Note that this durability requirement does not apply to non-serviceable aspects such as the surface finishes (eg. Powdercoating). For further information on these finishes refer to Page 5.

The durability aspect of the UNEX balustrade system has been assessed by a Materials and Corrosion consultant. A brief summary of this report is that in their opinion, UNEX Balustrades will meet these requirements if the balustrades are fabricated, installed and maintained in accordance with UNEX Systems' recommendations, including specific requirements relating to durability as outlined on Page 77-78 Note that this does not cover aesthetics, but only serviceability.

Certain Care and Maintenance procedures to be followed are given on Page 6.

(continued on following Page)

CLAUSE D1 - ACCESS ROUTES

Acceptable solution D1/AS1 stipulates requirements for handrails on all stairways, and on ramps steeper than 1:20 on "accessible" routes. The top rail on a balustrade may serve as a handrail on an access route providing it meets certain requirements including; the profile, a minimum distance perimeter of the top of the profile and the height of the top rail above the ramp or pitch line of the stairs is between 900-1000mm.

The VRE and CRR rails are the only rails that complies with the handrail profile requirements of D1/AS1 for "Private" and "Common" stairways, but not for "Accessible Stairways or Ramps", for which LRR & LRS rails are the only compliant rails.

Where a top rail of a balustrade on a stairway does not comply with D1/AS1, a compliant auxiliary LRR round side rail can be bracketed to the side of the balustrade.

D1/AS1 also limits the projection of a balustrade or handrail on an escape route including a stairway or ramp, so that it does not reduce the minimum width by more than 100mm. Particular attention should be given to the width of the stairs and ramps on escape routes to ensure there will be the minimum permitted width inside the balustrade(s) or handrail(s). This is particularly where balustrades are "top fixed". It is advisable to coordinate with the balustrade fabricator/installer early in the design process.

In some situations, balustrades may be required to be "imperforate and non-combustible". Whilst UNEX balustrades are not specifically designed to fulfill this requirement, they can usually be adapted to do so. UNEX Systems should be consulted if this is a requirement on any particular project.

UNEX Systems recommends that the NZBC is sighted in its entirety.

(continued on following Page)

Specifications subject to change without notice

CLAUSE E2 - WATER EGRESS

Where the balustrade attachment to the substrate incorporates water-proofing considerations, clause E2 of the NZ Building Code should be observed. Figure 19 of the Acceptable Solutions (E2/AS1 dated 1 July 2005) shows a detail which could apply to a balustrade. To sight the full details, please refer direct to the original documents in E2/AS1. There are some key points to be noted in figure 19 which must be incorporated in any application;

- The balustrade is side-mounted to a vertical surface (i.e. not top-mounted to a horizontal surface).
- The balustrade post is attached via a spacer which keeps the channel from directly bearing against the wall, and clears the drip edge above by a minimum of 25mm (Smaller clearances are usually accepted by Territorial Authorities).
- It shows a Neoprene or EPDM Washer between the spacer and the cladding.
- It shows the fixing which anchors into the framing, going through a batten in the cavity. It is important that any battens or packers used to transfer the compression loads within the cavity behind the cladding are vertical and extend over the full width and depth of the post, bracket or spacer.
- It shows a layer of sealant between the fixing and the sides of the hole in the cladding through which the fixing passes.

(continued on following Page)

CLAUSE F2 - HAZARDOUS BUILDING MATERIALS

This clause has particular application to balustrades with glass infill panels, which are required by Acceptable Solution F2/AS1 to comply with NZS 4223.

Effective from 1st June 2016, structural glass barriers need to have an interlinking rail, unless the barrier is laminated safety glass and has features to retain panes of glass or prevent collapse, in the event of breakage. An interlinking rail must be designed to resist serviceability limit state (SLS) loads, specified in AS/NZS 1170 and B1/VM1, in the event that a glass pane of the barrier breaks.

It is the responsibility of the fabricator to ensure that the balustrade glazing design complies with NZS 4223 in all respects; including glass thickness, glass span, panel size, containment, etc. However, the UNEX Balustrade System has been designed to make this easily achievable in most situations.

All glass used in UNEX Balustrades should be safety toughened.

CLAUSE F4 - SAFETY FROM FALLING

This clause stipulates when barriers such as balustrades are required, and provides generalized requirements for barriers such as: "Barriers shall be of appropriate height". Acceptable Solution F4/AS1 provides more specific information on barriers and pool fences, and covers such things as barrier heights, opening sizes, and restrictions on toeholds.

UNEX Balustrades are entirely versatile, and can be fabricated in virtually any height or configuration. It is therefore, the responsibility of the fabricator to ensure that the finished product complies in all respects to the requirements of Clause F4, with reference to the intended use of the area as obtained from the specifier or owner.

UNEX Systems recommends that the NZBC is sighted in its entirety.

(continued on following Page)

CLAUSE F9 - RESTRICTING ACCESS TO RESIDENTIAL POOLS

This clause has the requirements to prevent unsupervised access by children under five years of age to residential pools. It requires barriers around pools to restrict unsupervised access by children. Barriers can include gates and suitably constructed doors. Some small heated pools may have a removable cover rather than a surrounding barrier.

F9/AS1 provides the acceptable solution for swimming pool barriers in general. F9/AS2 provides the acceptable solution for covers which may be used on above ground small heated pools.

CHAPTER 1 - FRAMED GLASS EXTRUSIONS & COMPONENTS

Posts pg17-18
Rails pg19-21
Infills & Inserts pg22-23
Miscellaneous Extrusions pg24
Baseplates (50mm x 40mm) pg25
Baseplates (50mm x 50mm) pg26-27
Baseplates (50mm x 60mm) pg28
Blanks & Caps pg29-31
Wallplates pg32-34
Brackets pg35-37
Connectors, Jointers & Spacers pg38-39
Framed Gates & Hardware pg40-44
Setting Blocks, Gaskets, & Wedges pg45-47
Fasteners pg48-52
Tools & Accessories pg53

POSTS

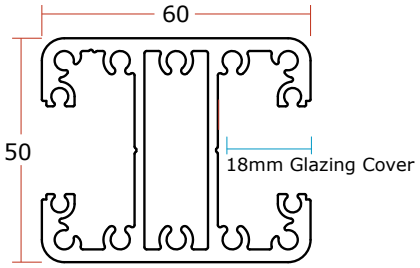

APE2

POST, RECESSED, EXTRA HEAVY DUTY

Extra heavy duty post with glazing recess on both sides. Refer to General Notes for glass support and lower rail attachment methods.
Glazing pocket width = 19.6mm
Glazing pocket depth = 20mm
Accepts AIA glass support insert and AIR2 infill to blank off recess if required.
10 gauge screwpipes.

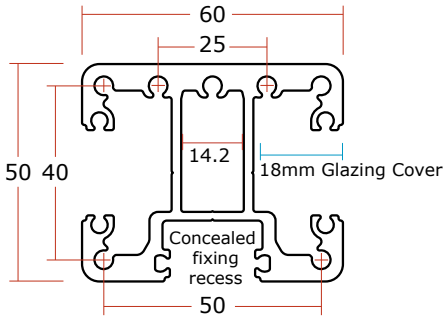

API2

POST, RECESSED, CONCEALED FIXING, EXTRA HEAVY DUTY

Extra heavy duty post with glazing recess on both sides when side fixing ONLY. Refer to General Notes for glass support and lower rail attachment methods.
Glazing pocket width = 19.6mm
Glazing pocket depth = 20mm
Accepts AIA glass support insert and AIR2 infill to blank off recess if required.
10 gauge screwpipes.

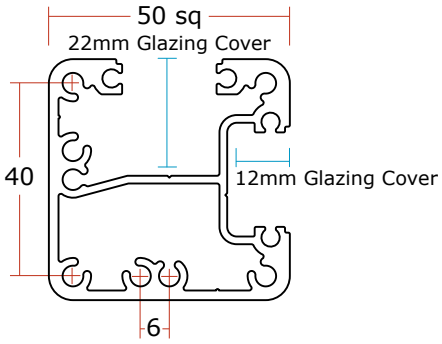

APQ2

POST, RECESSED CORNER

Post with glazing recesses on adjacent faces for corner applications. Refer to General Notes for glass support and lower rail attachment methods
Glazing Pocket Width = 19.6mm
Glazing Pocket Depth = 24.0mm
Glazing Pocket Depth (shallow recess) = 13.0mm
Accepts AIA glass support insert and AIR2 infill to blank off recess if required.
10 gauge screwpipes.

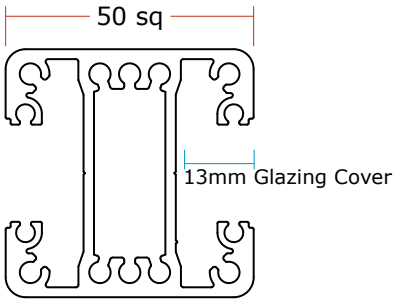

APS2

POST, RECESSED

Post with glazing recess on both sides. Refer to General Notes for glass support and lower rail attachment methods. Should be used in preference to APR2 post for side fixing, and for concrete core-drilled fixing.
Glazing Pocket Width = 14.2mm
Glazing Pocket Depth = 16.0mm
Accepts AIA glass support insert and AIR2 infill to blank off recess if required.
10 gauge screwpipes.

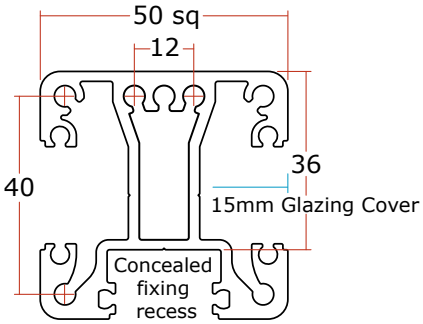

APT

POST, RECESSED, CONCEALED FIXING

Post with glazing recess on both sides fro side fixing ONLY. Refer to General Notes for glass support and lower rail attachment methods. Should be used in preference to APS2 post for side fixing, and for concrete core-drilled fixing.
Glazing Pocket Width = 19.6mm
Glazing Pocket Depth = 17.8mm
Accepts AIA glass support insert and requires AIR2 infill ONLY to blank off concealment recess.
10 gauge screwpipes.

POSTS - (CONT'D)

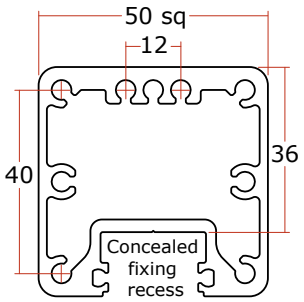

VPC

POST, HOLLOW, CONCEALED FIXING, EXTRA HEAVY DUTY

Hollow post for Extra Heavy Duty side fix ONLY applications with AIR2 infill clipping into channel to conceal fixing screws.

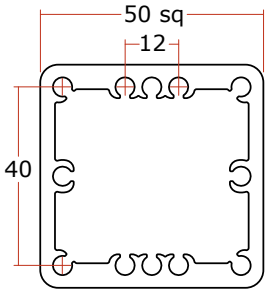

VPE

POST, HOLLOW, EXTRA HEAVY DUTY

Hollow post for Extra Heavy Duty applications.
10 gauge screwpipes.

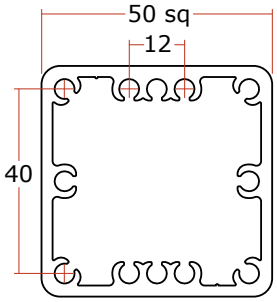

VPH2

POST, HOLLOW, HEAVY DUTY

Hollow post for Heavy Duty applications. May also be used as a corner post where 50x40mm posts are used elsewhere.
10 gauge screwpipes.

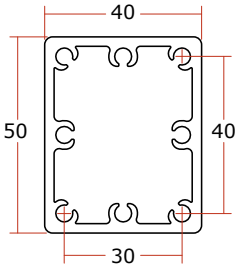

VPM2

POST, HOLLOW, MEDIUM DUTY

Hollow posts for Medium Duty applications. The 50mm face is transverse to the rail. Can be used as an intermediate or corner post.
10 gauge screwpipes.

RAILS

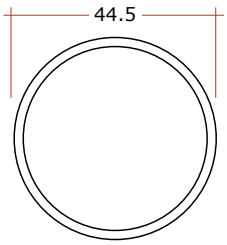

LRR

RAIL, ROUND, SIDE OUTER

Form a continuous side rail when using LRWN bracket mounted to posts on UNEX's Framed Glass Styles.

Size complies with handrail requirements for an "Accessible Stairway or Ramp".

Note: Handrail jointers and bends available, contact UNEX

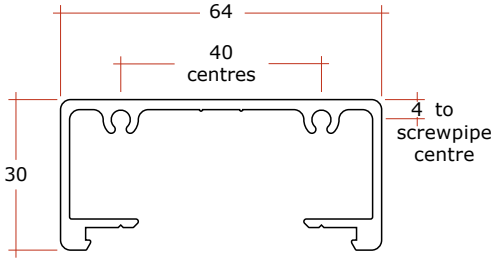

VRR

RAIL, RECTANGLE TOP OUTER

Clip fits to DRH, DRI2 or PZT Rails to form a continuous Top Rail.
8 gauge screwpipes for wallplates, etc.

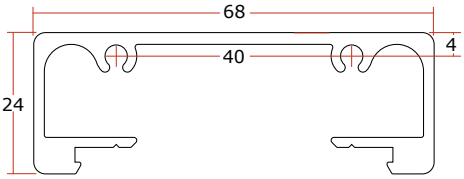

PRR

RAIL, RECTANGLE, TOP OUTER

Clip fits to DRI2, DRH, or PZT Rails to form a continuous Top Rail for UNEX's Framed Styles.
8 gauge screwpipes for wallplates, etc.

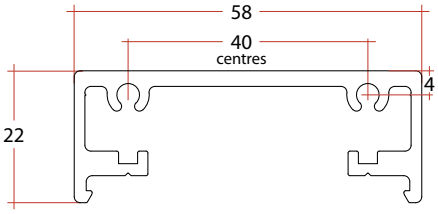

CRR

RAIL, RECTANGLE, SIDE OUTER

Clip fits to DRH, DRI2 or PZT Rails to form a continuous Side Rail when using the LBWN bracket mounted to posts in UNEX's Framed Glass styles.
8 gauge screwpipes for wallplates, etc.

Size complies with handrail requirements for a "Private & Common Stairway".

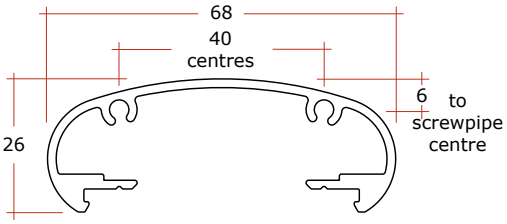

VRE

RAIL, ELLIPTICAL TOP OUTER

Clip fits to DRH, DRI2 or PZT Rails to form a continuous Top Rail.
8 gauge screwpipes for wallplates, etc.

Size complies with handrail requirements for a "Private & Common Stairway".

RAILS - (CONT'D)

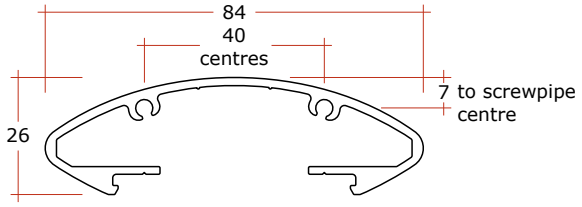

ART

RAIL, TOP OUTER

Clip fits to DRH, DRI2, or PZT Inner Rails to form a continuous Top Rail. Accepts two 8 gauge screws for wallplates etc.

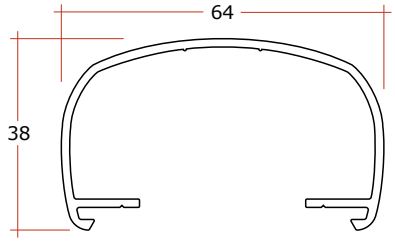

VRT

RAIL, TOP OUTER

Clip fits to DRH, DRI2 or DZT3 Rails to form a continuous Top Rail. Accepts VNT spigot and VIT extrusion.

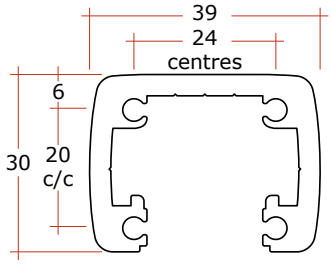

ARN

RAIL, TOP OUTER & LOWER, HEAVY DUTY

Lower Rail for Baluster styles, can be used in place of VRL3. Invert for Glazed Lower Rails. Also used as the mid-rail of Double Top Rail Styles. Accepts DIA, AIA & AIR2 inserts and the ANG range of spigots.
Glazing Pocket Width = 19.6mm
Glazing Pocket Depth = 26.4mm
8 gauge screwpipes.

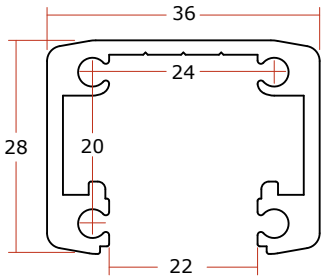

VRL3

RAIL, LOWER

Lower Rail for Baluster styles. Invert for Glazed Lower Rails. Also used as the mid-rail of Double Top Rail Styles. Accepts DIA, AIA & AIR2 inserts and the ANG range of spigots.
Glazing Pocket Width = 19.6mm
Glazing Pocket Depth = 26.3mm
8 gauge screwpipes.

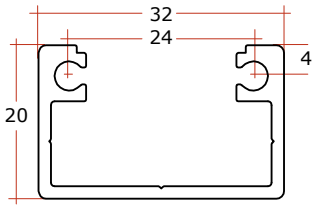

DRC

GLAZING CHANNEL

For miscellaneous glazing applications.

RAILS - (CONT'D)

DRH

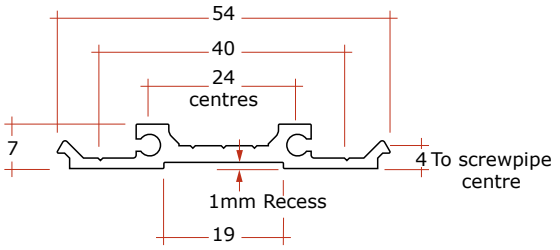

RAIL, TOP INNER

Clip fits to all Top Rails except RRS to form a continuous Top Rail with a flat underside (except for 19 x 1.0 recess). Use for Top Rails without balusters (eg:-Double top rails). Also for attaching DTH Balusters, or 19mm wide decorative motifs with a 1mm insert above the lower face of this rail.
8 gauge screwpipes.

DRI2

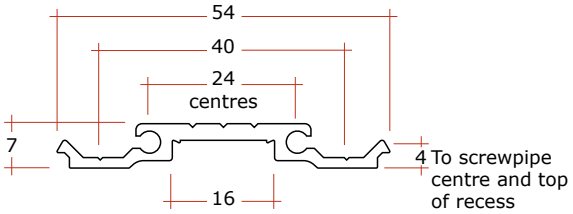

RAIL, TOP INNER*

Clip fits to all Top Rails to form a continuous Top Rail for attachment of 16mm Balusters. Balusters insert 4mm above lower face of this rail.
8 gauge screwpipes.

** Regd. NZ Design No 23639*

DZT3

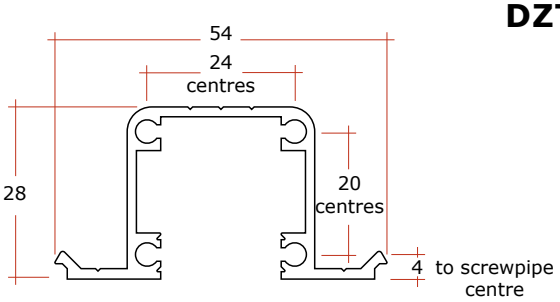

HI-PROFILE GLAZING TOP INNER RAIL

Clip fits to VRT Rail to form a continuous Top Rail for Glass insertion.
Glazing Pocket Width = 19.6mm
Glazing Pocket Depth = 26.4mm
Accepts SRD Retained Gasket on both sides.
8 gauge screwpipes.

PZT

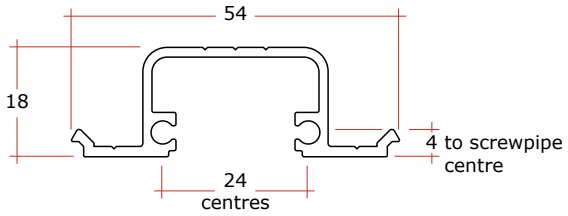

LOW PROFILE GLAZING TOP INNER RAIL

Clip fits to ART, PRR, VRE and VRR Rails to form a continuous Top Rail for Glass insertion.
Glazing Pocket Width = 19.6mm
Glazing Pocket Depth = 16.4mm
Accepts SRD Retained Gasket on both sides
8 gauge screwpipes.

CRF

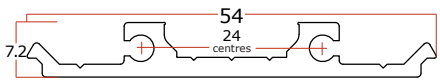

RAIL, SIDE INNER

Clip fits to CRR Rails to form a continuous Side Rail when using the LBWN bracket mounted to posts in UNEX's Framed Glass Balustrade styles.
8 gauge screwpipes.

INFILLS & INSERTS

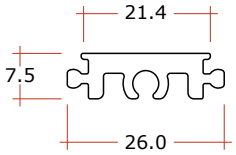

AIA

INSERT, GLASS SUPPORT TYPE

Slides into the glazing recess of the APE2, APQ2 and APS2 post. Can can be used in conjunction with AKS2 or AKSV plates. Can also be used as a blank infill where required.
10 gauge screwpipe.

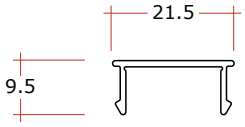

AIR2

INFILL, CLIP FIT

Clips into all glazing recesses, except for DZC extrusion.

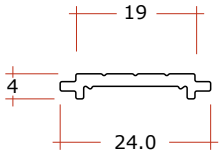

DIA

INFILL, ADAPTOR TYPE

Slides into mouth of DRL3 Rails. Enables balusters to be attached to these extrusions.
DTS3 Balusters insert into the recessed side (add 4mm to baluster length).
DTH Balusters attach to the surface with groove-lines (add 2mm to baluster length).

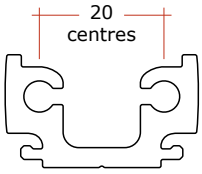

MANG

INSERT, SPIGOT FOR VRL3 RAIL

For manufacturing customised ANG type spigots. Inserts into ARN and VRL3 rail. May be used as a stiffener.

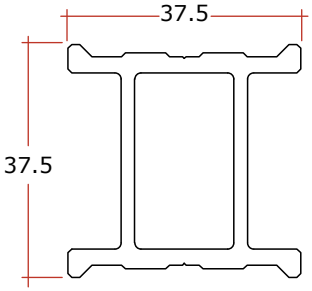

VIH

POST STIFFENER

Inserts into VPH2, VPE and DPE Posts.

INFILLS & INSERTS - (CONT'D)

VIR

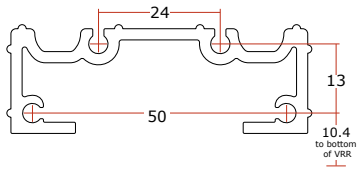

INSERT, SPIGOT FOR VRR RAIL

Inserts into VRR Outer Top Rail. May be used to manufacture jointers, or hidden wall connectors. Screws to VWT plate with 3 off 8 gauge screws. Large ports clear 14 gauge screws or M8 Dynabolts to the wall. See also component VNT.

VIT

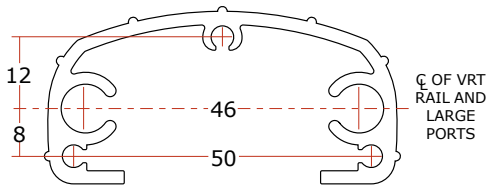

INSERT, SPIGOT FOR VRT RAIL

Inserts into VRT Outer Top Rail. May be used to manufacture jointers, or hidden wall connectors. Screws to VWT plate with 3 off 8 gauge screws. Large ports clear 14 gauge screws or M8 Dynabolts to the wall. See also component VNT.

MISCELLANEOUS EXTRUSIONS

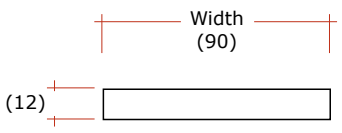

MBB90 illustrated

MBB75
MBB90
MBB115

BASEPLATE BAR

Solid Aluminium Bar. Used for manufacture of custom size baseplates, etc. 12mm thick. The figure after the code MBB denotes the width in millimetres.

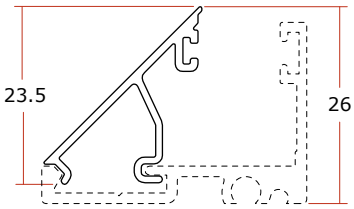

MGB2

GATE GLAZING BEAD

Suits MGG2 glazing angle. For 6mm thick glass, use SRR retained gasket and SWE35 wedge. Use the toughened glass pane as bracing in glass gates.

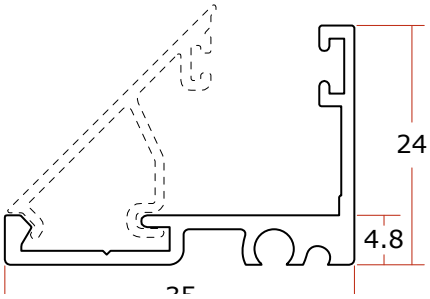

MGG2

GATE GLAZING ANGLE

Can be used on glass gates, top and bottom of a frame to receive glass. Accepts SRR retained gasket and MGB2 glazing bead. Use SBG Setting Blocks.

BASEPLATES (50MM X 40MM)

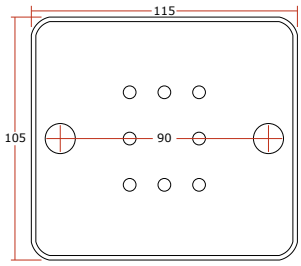

BMLR

BASEPLATE FOR VPM2 POST

For attachment of VPM2 posts to Steel Substrates, where only two fasteners are required in line with balustrade centreline.
Ø13mm fixing holes.
12mm thick plate.

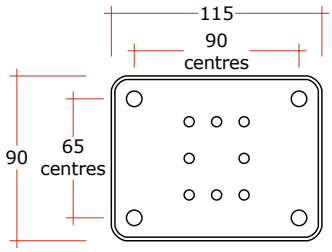

BMMF illustrated

BMMF
BMMP
BMMZ

BASEPLATE FOR VPM2 POST

For attachment of VPM2 posts to DKG2-140 bracket, or narrow Timber and Concrete substrates. 12mm thick plate.
BMMF = 4 off Ø11mm fixing holes.
BMMP = 4 off Ø13mm fixing holes.
BMMZ = No holes for substrate fixings.

***BMQF, BMQP, BMQZ superceded by BMM_ baseplates shown above*

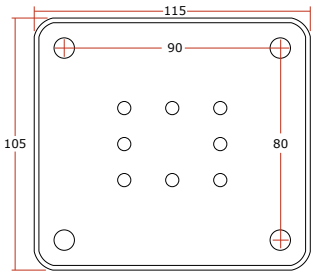

BMRF
BMRP
BMRZ

BASEPLATE FOR VPM2 POST

For maximum strength attachment of VPM2 posts to Timber or Concrete substrates. 12mm thick plate.
BMRF = 4 off Ø11mm fixing holes.
BMRP = 4 off Ø13mm fixing holes.
BMRZ = No holes for substrate fixings.

***BMRZ is made to order*

BASEPLATES (50MM X 50MM)

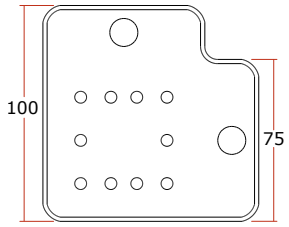

BSCR

BASEPLATE FOR 50X50 POSTS, CORNER

For 90° corners where 2 baseplates, BSHR or BSMR, are used elsewhere.
Ø13mm fixing holes.
12mm thick plate.

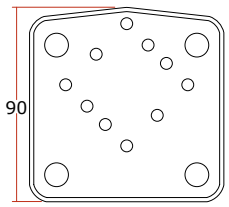

BSGF

BASEPLATE FOR ON 90° CORNER GUTTER BRACKETS

For attachment of APQ2, APS2, VPE, & VPH2 Posts to the DKG90-043 90° corner welded gutter bracket.
4 off Ø11mm fixing holes.
12mm thick plate.

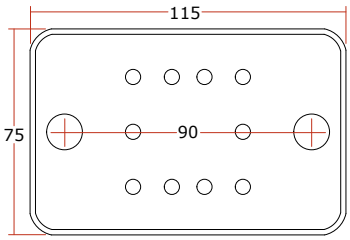

BSHR

BASEPLATE FOR 50X50 POSTS, INLINE FIXING

For attachment of APQ2, APS2, VPE, & VPH2 posts directly to Steel Substrates where only 2 fasteners are required to be in-line with the balustrade centreline.
Ø13mm fixing holes.
12mm thick plate.

**TSS75 Tape is required to separate between baseplate and steel substrates*

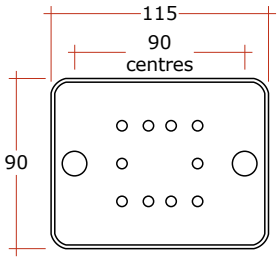

BSMR

BASEPLATE FOR 50X50 POSTS, INLINE FIXING

For attachment of APQ2, APS2, VPE, & VPH2 posts directly to Steel Substrates where only 2 fasteners are required to be in-line with the balustrade centreline.
Ø13mm fixing holes.
12mm thick plate.

**TSS90 Tape is required to separate between baseplate and steel substrates*

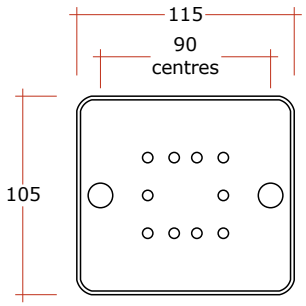

BSLR

BASEPLATE FOR 50X50 POSTS

For attachment of APQ2, APS2, VPE, & VPH2 posts directly to Steel Substrates, where only 2 fasteners are required to be in-line with balustrade centreline.
Ø13mm fixing holes.
12mm thick plate.

BASEPLATES (50MM X 50MM) - (CONT'D)

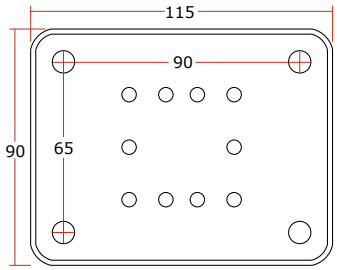

BSMF
BSMP

BASEPLATE FOR 50X50 POSTS

For attachment of APQ2, APS2, VPE, & VPH2 posts to DKG2-140 bracket, or narrow Timber and Concrete Substrates. 12mm thick plate.

BSMF = 4 off Ø11mm fixing holes.
BSMP = 4 off Ø13mm fixing holes.
BSMZ = No holes for substrate fixings.
BZMF = No holes for post, substrate only.

***BSMZ, BZMF is made to order*

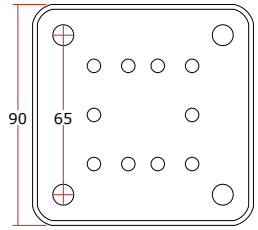

BSQF
BSQP

BASEPLATE FOR 50X50 POSTS

For attachment of APQ2, APS2, VPE, & VPH2 posts on corners where BSM_ bases are used on in-line posts. 12mm thick plate.

BSQF = 4 off Ø11mm fixing holes.
BSQP = 4 off Ø13mm fixing holes.
BSQZ = No holes for substrate fixings.

***BSQZ is made to order*

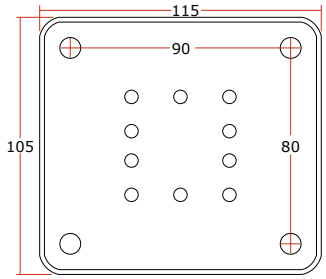

BSRF
BSRP

BASEPLATE FOR 50X50 POSTS

For maximum strength attachment of APQ2, APS2, VPE, & VPH2 posts to Timber and Concrete Substrates. 12mm thick plate.

BSRF = 4 off Ø11mm fixing holes.
BSRP = 4 off Ø13mm fixing holes.
BSRZ = No holes for substrate fixings.
BZRP = No holes for post, substrate only.

***BZRS, BZRP is made to order*

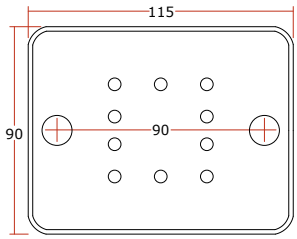

BSRR

BASEPLATE FOR 50X50 POSTS

For attachment of APQ2, APS2, VPE, & VPH2 posts to Concrete Substrates where only two fasteners are required. 12mm thick plate.
BSRR = 2 off Ø13mm fixing holes.

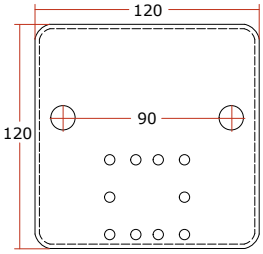

BSORG

OFFSET BASEPLATE FOR 50X50 POSTS

For attachment of APQ2, APS2, VPE, & VPH2 posts to Concrete Stair Substrates where only two fasteners are required. 16mm thick plate.
BSRR = 2 off Ø13mm fixing holes.
Offset for stairs.

BASEPLATES (50MM X 60MM)

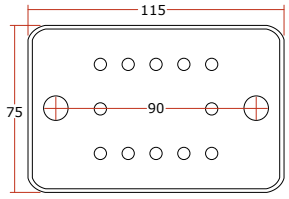

BEHR

BASEPLATE, FOR 50X60 POSTS, INLINE FIXING

For attachment of APE2 Posts directly to Steel Substrates where only 2 fasteners are required to be in-line with the balustrades centreline.
Ø13mm fixing holes.
12mm thick plate.

**TSS75 Tape is required to separate between baseplate and steel substrates*

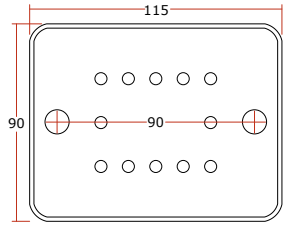

BEMR

BASEPLATE, FOR 50X60 POSTS, INLINE FIXING

For attachment of APE2 Posts directly to Steel Substrates where only 2 fasteners are required to be in-line with the balustrades centreline..
Ø13mm fixing holes.
12mm thick plate.

**TSS90 Tape is required to separate between baseplate and steel substrates*

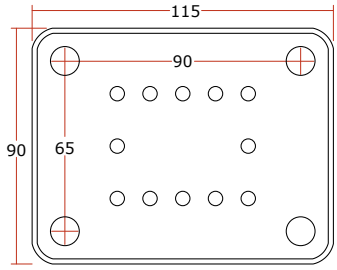

BEMF

BASEPLATE FOR 50X60 POSTS

For attachment of APE2 Posts to the DKG2-014 gutter bracket.
4 off Ø11mm fixing holes.
12mm thick plate.

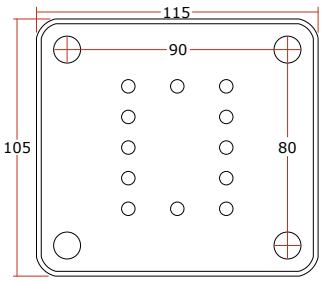

BERF
BERP

BASEPLATE FOR 50X60 POSTS

For maximum strength attachment of APE2 posts to Timber or Concrete substrates. 12mm thick plate.
BERF = 4 off Ø11mm fixing holes.
BERP = 4 off Ø13mm fixing holes.
BERZ = No holes for substrate fixings.

***BERZ is made to order*

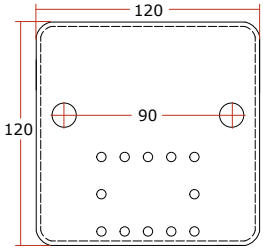

BEORG

OFFSET BASEPLATE FOR 50X60 POSTS

For maximum strength attachment of APE2 posts to Timber or Concrete substrates where only two fasteners are required. 16mm thick plate.
Offset for stairs.

BLANKS & CAPS

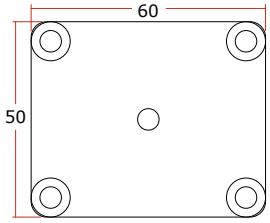

AAESS

BLANK, FOR APE2 POSTS, SET

To blank off lower ends of side-fixed APE2 posts. Must be used when using the AKS2 or AKSV glass support method, and must be attached with 4 off FV10-38.T1 screws included in set.
3mm thick plate

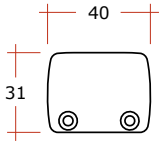

AAL

BLANK, FOR ARN LOWER RAIL

To blank off ends of ARN Lower Rail, for those rare applications where the Lower Rail end would otherwise be exposed. Countersunk holes for 8 gauge screws. 3mm thick plate.

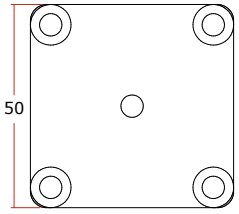

AAPS

BLANK, FOR APQ2 & APS2 POSTS, SET

To blank off lower ends of side-fixed APQ2 & APS2 posts. Must be used when using the AKS2 or AKSV glass support method, and must be attached with 4 off FV10-38.T1 screws included in set.
3mm thick plate.

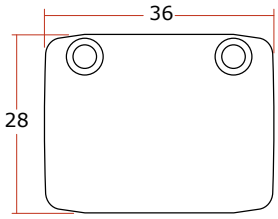

VAL3

BLANK, FOR VRL3 LOWER RAIL

To blank off ends of VRL3 Lower Rail, for those rare applications where the Lower Rail end would otherwise be exposed, or to finish the lower rail on side-fixed Hampton-style balustrades.

Countersunk holes for 8 gauge screws. 3mm thick plate.

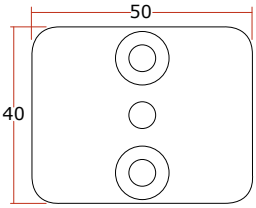

VAM

BLANK, FOR VPM2 POSTS

To blank off lower ends of side fixed VPM2 posts. Countersunk holes for 10 gauge screws.
3mm thick plate.

BLANKS & CAPS - (CONT'D)

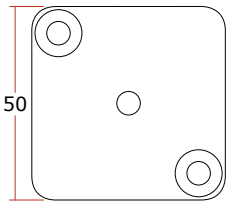

VAP

BLANK, FOR VPH2 POSTS

To blank off lower ends of side-fixed VPH2 posts only. Countersunk holes for 10 gauge screws. 3mm thick plate.

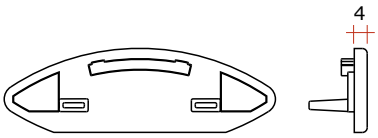

ACT

CAP, TOP RAIL

Cast aluminium cap for ART top rail ends. Commonly attached with 1 off FS4-6 rivet.

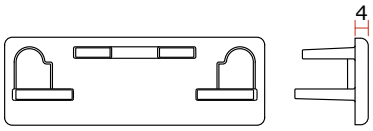

PRCT

CAP, TOP RAIL

Cast aluminium cap for PRR Top Rail ends. Commonly attached with 1 off FS4-6 rivet.

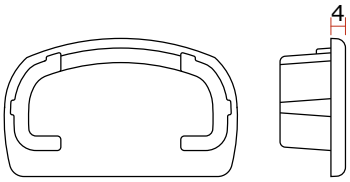

VCT

CAP, TOP RAIL

Cast aluminium Cap for VRT Top Rail ends. Commonly attached with 1 off FS4-6 rivet.

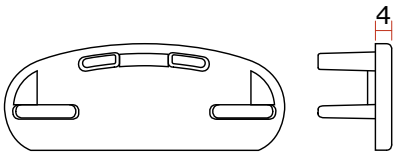

VECT

CAP, TOP RAIL

Cast aluminium Cap for VRE Top Rail ends. Commonly attached with 1 off FS4-6 rivet.

BLANKS & CAPS - (CONT'D)

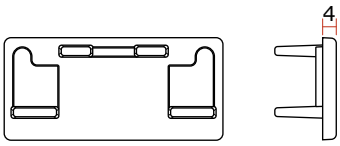

VRCT

CAP, TOP RAIL

Cast aluminium Cap for VRR Top Rail ends.
Commonly attached with 1 off FS4-6 rivet.

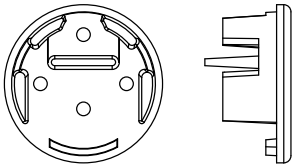

LCS

CAP, SIDE RAIL

Cast aluminium cap for LRR Side Rail ends.

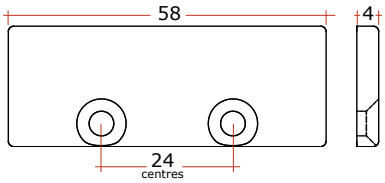

CRCG

CAP, SIDE RAIL

Aluminium cap for CRR Side Rail ends.
Attached with 8 gauge countersunk screws.
4mm Thick.

WALLPLATES

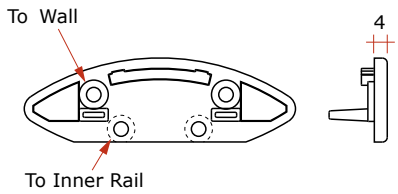

AWC

WALLPLATE, CAST, FOR ART TOP RAIL

As ACT but drilled to be attached to the Inner Rail using FV8-19, then to post face. ART rail then clips to Inner Rail, and slides up to AWC. (not suitable for rails between fixed ends).

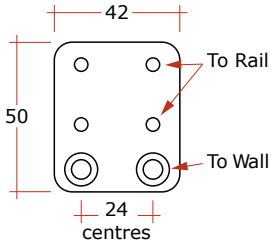

AWL

WALLPLATE, LOWER & MID RAILS

Flat wallplate, screws to ARN & VRL3 Lower Mid Rail ends using FV8-19, and then to adjacent wall or column (perpendicular applications only).
Ø6.5mm holes to wall.
6mm thick plate.

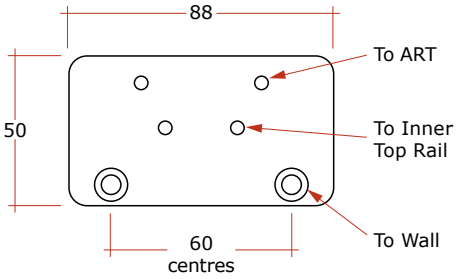

AWT

WALLPLATE, FOR ART & VRE TOP RAIL

6mm thick flat wallplate, screws to end of ART and inner rail using FV8-19, and then to wall or column. For perpendicular applications only.
Ø6.5mm holes to wall.
6mm thick plate.

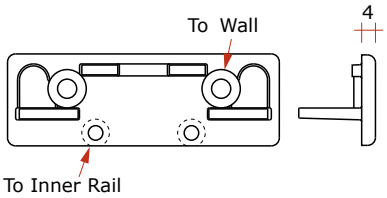

PRWC

WALLPLATE, CAST, FOR PRR TOP RAIL

As PRCT, but drilled to be attached to the Inner Rail using FV8-19 and then to post face. PRR top rail then clips to Inner Rail, and slides up to PRWC (not suitable for rails between fixed ends).

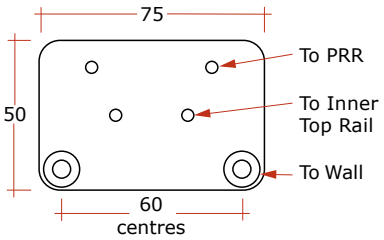

PRWT

WALLPLATE, FOR PRR & VRE TOP RAILS

Flat wallplate, screws to end of PRR, VRE and Inner Rail using FV8-19, and then to wall or column (perpendicular applications only).
Ø6.5mm holes to wall.
6mm thick plate.

WALLPLATES - (CONT'D)

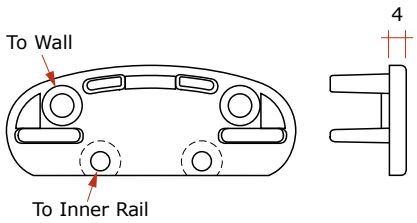

VEWC

WALLPLATE, CAST, FOR VRE TOP RAIL

As VECT, but drilled to be attached to the Inner Rail using FV8-19, then to the post face. VRE rail then clips to Inner Rail, and slides up to VEWC (not suitable for rails between fixed ends).

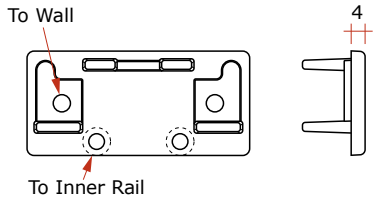

VRWC

WALLPLATE, CAST, FOR VRR TOP RAIL

As VRCT, but drilled to be attached to the Inner Rail using FV8-19, then to the post face. VRR rail then clips to Inner Rail, and slides up to VRWC (not suitable for rails between fixed ends).

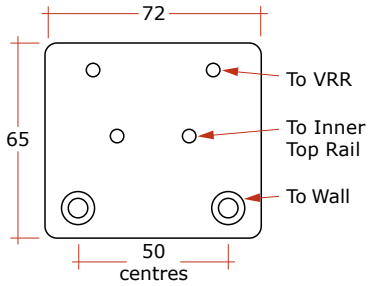

VRWT

WALLPLATE, RECTANGLE TOP RAIL

Flat wallplate, screws to end of VRR and Inner Rail using FV8-19, and then to wall or column (perpendicular applications only). Ø6.5mm holes to wall.
6mm thick plate.

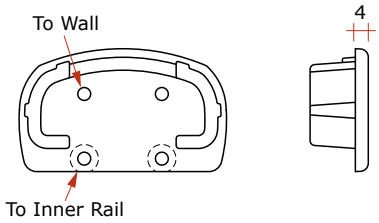

VWC

WALLPLATE, CAST, FOR VRT TOP RAIL

As VCT, but drilled to be attached to the Inner Rail using FV8-19, then to the post face. VRT rail then clips to Inner Rail, and slides up to VWC (not suitable for rails between fixed ends).

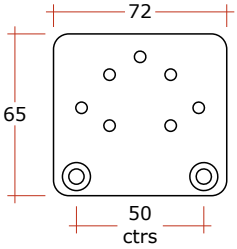

VWT

WALLPLATE, FOR VRT TOP RAIL

Flat wallplate, screws to end of Inner Rail, and to spigot (VNT) where applicable using FV8-19, and then to wall or column (perpendicular applications only). Ø6.5mm holes to wall.
6mm thick plate.

WALLPLATES - (CONT'D)

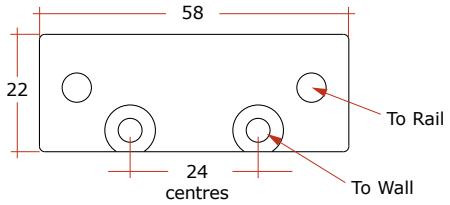

CRWC

WALLPLATE, FOR CRR RAIL

Flat wallplate, screws to end of CRR and Inner Rail using FV8-19, and then to wall or column (perpendicular applications only). Ø6.5mm holes to wall.
4mm thick plate.

BRACKETS

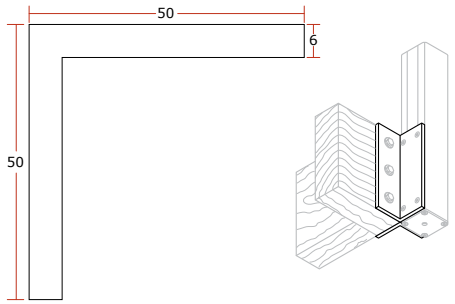

AKP

BRACKET, SIDE FIXED POSTS

For attaching posts to side of decks, especially APQ2 posts on 90º corners of side-fixed applications. SPECIFY length required when ordering; 140mm, 190mm, 240mm or 290mm. Otherwise 190mm will be supplied.
Two required on corners for styles that have no Top Rails. Commonly attached to post with 4 off FV10-19.T1 screws each and to substrate with 3 substrate fasteners each (offset to avoid clashing).

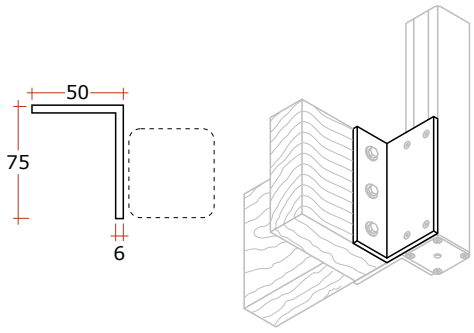

AKPL

BRACKET, SIDE FIXED POSTS

For attaching side-fixed applications of APQ2 posts to 90º corners in on decks where the deck extends past the joist. SPECIFY length required when ordering; 140mm, 190mm, 240mm or 290mm. Otherwise 190mm will be supplied.
Two required on corners for styles that have no Top Rails. Commonly attached to post with 4 off FV10-19.T1 screws each and to substrate with 3 substrate fasteners each (offset to avoid clashing).

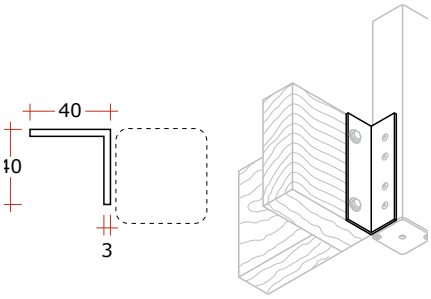

DKP

BRACKET, SIDE FIXED POSTS

For attaching posts to side of decks, especially on 90º corners of side-fixed applications. SPECIFY the length required when ordering; 140mm, 190mm, 240mm or 290mm. Otherwise 190mm will be supplied.
Commonly attached to post with 4 off FR6-4 rivets and to substrate with 2 substrate fasteners each.

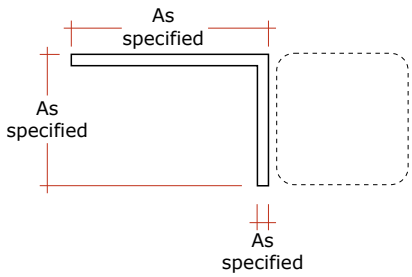

DKPSP

SPECIAL BRACKET, SIDE FIXED POSTS

As per DKP except made out of non-standard angle, to be specified with order. Common example would be Ex: 75 x 50 x 6mm angle, often used on concrete decks.
Commonly attached to post with 4 off FR6-6 rivets.

BRACKETS - (CONT'D)

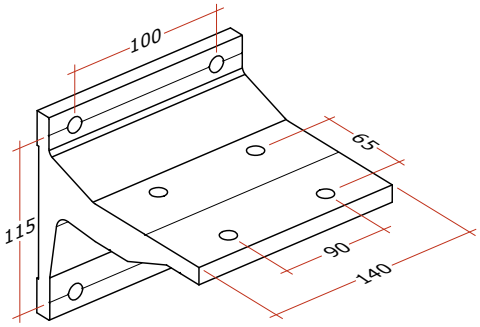

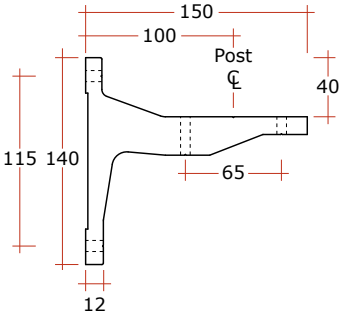

DKG2-014

BRACKET, FOR SIDE MOUNTING WITH GUTTER

Bracket for side mounting in situations involving a gutter. The gutter is mounted just below protruding flange via setting blocks between brackets to allow the gutter to pass in front of the bracket. The post is then top mounted onto the bracket via a base plate. Refer to page 176 for more detail.
Note: excludes supply of the guttering, however desired profile must be mounted using an internal bracket system.

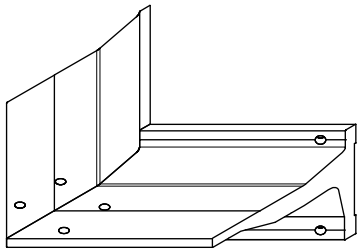

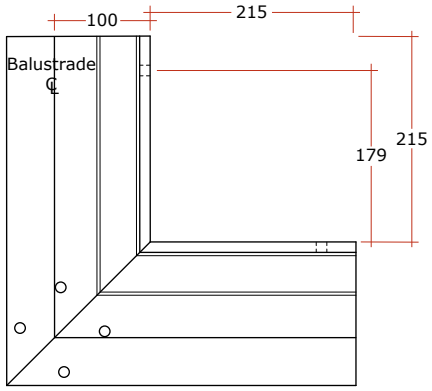

DKG90-043

BRACKET, FOR 90° CORNERS WITH GUTTER

Bracket as per DKG2-014 except welded to suit 90° corner situations. Requires post to be mounted using the BSGF base plate.

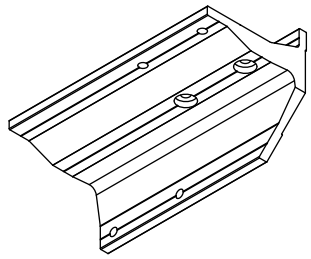

DKG2-030L Left (Illustrated)

DKG2-030L
DKG2-030R

BRACKET, FOR EXTENDING PAST CORNERS WITH GUTTER

300mm long extension bracket where gutter is not continuous around a corner allowing for a standard DKG2 series baseplate to be used.

BRACKETS - (CONT'D)

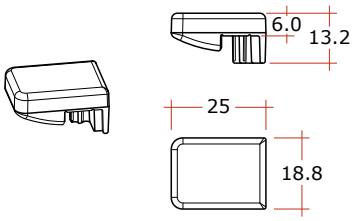

AKS2

BRACKET, GLASS SUPPORT

For attaching to top of AIA insert within the glazing recess of the APE2, API2, APQ2, APS2, and APT Posts to provide vertical support to the glass. It is a one-piece Polymer support. Therefore no additional setting block is required.

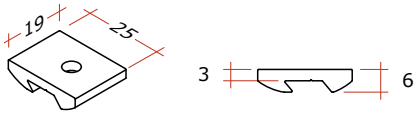

AKSVS

PLATE, GLASS SUPPORT

Similar to AKS2, except used on stairs & ramps etc, up to 40° slopes. Plate sits on top of AIA insert which is cut to slope angle. Attach plate with a small amount of suitable adhesive. Use an SBC block to separate glass and metal.

PLATE, GLASS MOUNT, SET
AKSV plate (Black only) supplied with SBC setting block

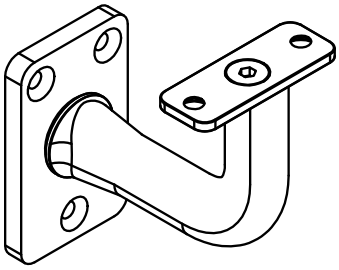

LBWN
LRWN

HANDRAIL BRACKET CONNECTOR

Connects to a post to hold a continuous Side Rail using a wallplate. Attach with FV10-19TR. Drill Ø4.1mm pilot hole.

LBWN = For flat underside side rails. LBWX with P/C LXXN Wallplate.
LRWN = For round underside side rails. LRWX with P/C LXXN Wallplate.

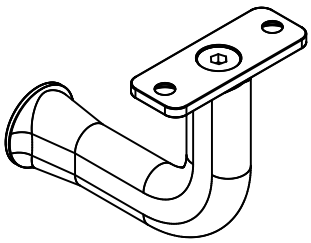

LBWX
LRWX

HANDRAIL BRACKET CONNECTOR
Connects to a post to hold a continuous Side Rail. Attach with FL10-70.

LBWX = For flat underside side rails.
LRWX = For round underside side rails.

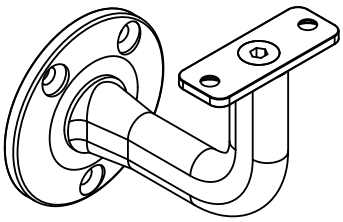

LBWC
LRWC

HANDRAIL BRACKET CONNECTOR
Connects to a wall to hold a continuous Side Rail. 60mm Base. Attach with FV10-19TR.

LBWC = For flat underside side rails.
LRWC = For round underside side rails.

CONNECTORS, JOINTERS & SPACERS

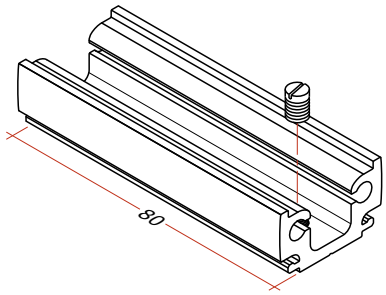

ANGAG
ANGAM
ANGAU

CONNECTOR, LOWER RAILS

As per ANGG, ANGM and ANGU except with extra length for trimming to a specific angle.
IMPORTANT: Use strictly as per the instructions given on Page 177.
ANGAG = with Slotted Grub Screw
ANGAM = with Machine Screw. (Not suitable for mid rails)
ANGAU = no fastener or hole, 120mm long. For use on baluster panels.

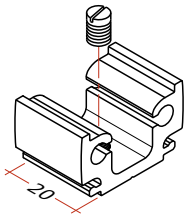

ANGG
ANGM
ANGU

CONNECTOR, LOWER RAILS

For attaching ARN & VRL3 Lower Rail extrusion to certain post types.
IMPORTANT: Use strictly as per the instructions given on Page 177.
ANGG = with Slotted Grub Screw
ANGM = with Machine Screw. (Not suitable for mid rails)
ANGU = no fastener or hole. For use on baluster panels.

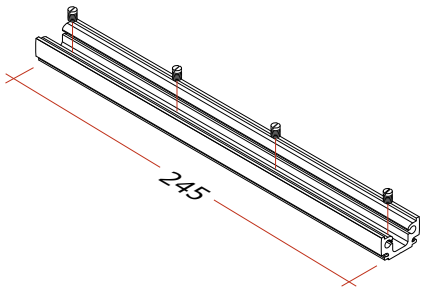

ANG245G

CONNECTOR, LOWER RAILS

For joining 2 straight sections of ARN Lower Rail extrusion to one another.
4 Slotted Grub screws to fasten this connector to the underside of the ARN rail type.

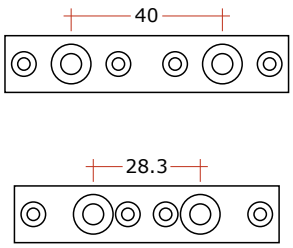

DNC
DND

CONNECTOR, CORNER VPH2 POSTS

Use under screw heads which attach the DZT3 rail to posts at mitred corners, to secure the joint. See Page 194.
DNC = Rails meeting on OPPOSITE post faces.
DND = Rails meeting on ADJACENT post faces.

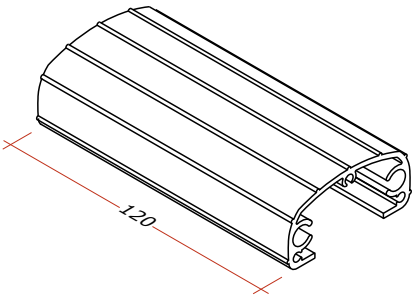

VNTA

CONNECTOR FOR ANGLED WALLPLATE

As per VNT except oversize to allow trimming for angles. May also be used as jointer in butt joins with the VRT top rail.

CONNECTORS, JOINTERS & SPACERS - (CONT'D)

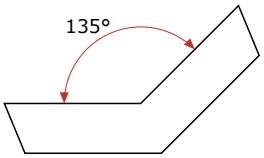

DNS135

SUSPENDED CORNER GUSSET

Attach to the top surface of two Top Inner Rails on an suspended corner mitre. Commonly attached to Inner Rail with 4 off FS5-4 rivets. 2mm thick flat plate.

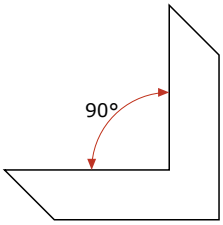

DNS90

SUSPENDED CORNER GUSSET

Attach to the top surface of two Top Inner Rails on an suspended corner mitre. Commonly attached to Inner Rail with 4 off FS5-4 rivets 2mm thick flat plate.

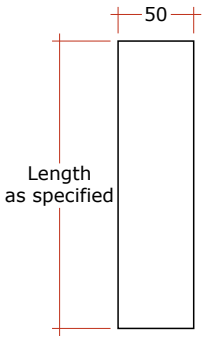

P050A (6mm)
P050B (10mm)
P050C (12mm)
P050D (20mm)
P100B (10mm)
P100C (12mm)

PACKER, FOR SIDE MOUNTED POSTS

Packer for packing out side mounted posts from deck edge. SPECIFY the length required when ordering up to 240mm (longer will incur extra cost).

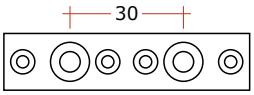

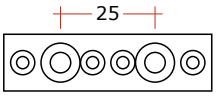

VNC
VND

CONNECTOR, CORNER VPM2 POSTS

Use under screw heads which attach the DZT3 rail to posts at mitred corners, to secure the joint. See Page 194.

VNC = Rails meeting on OPPOSITE post faces.

VND = Rails meeting on ADJACENT post faces.

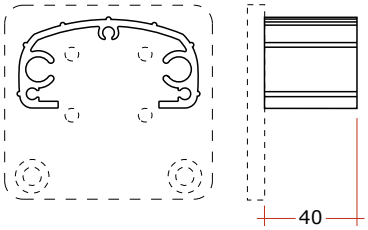

VNT

CONNECTOR FOR VWT WALLPLATE

Prefabricated from VIT extrusion. Is used to strengthen the connection between the VWT wall plate and the VRT top rail. Attach to VWT with 3 of FV8-19 screws. Using this component is mandatory if the Top Inner Rail is either DRH, DRI2 or PZT.

FRAMED GATES & HARDWARE

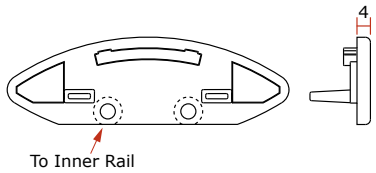

ACG

CAP, TOP RAIL, GATES

Endcap for ART Top Rail with countersunk holes for attachment to the Inner Rail using FV8-19. Principally for use on pedestrian gates.

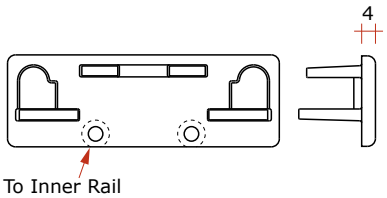

PRCG

CAP, TOP RAIL, GATES

Endcap for PRT Top Rail with countersunk holes for attachment to the Inner Rail using FV8-19. Principally for use on pedestrain gates.

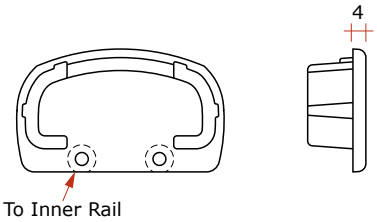

VCG

CAP, TOP RAIL, GATES

Endcap for VRT Top Rail with countersunk holes for attachment to the Inner Rail using FV8-19. Principally for use on pedestrian gates.

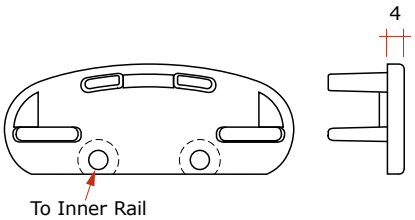

VECG

CAP, TOP RAIL, GATES

Endcap for VRE Top Rail with countersunk holes for attachment to the Inner Rail using FV8-19. Principally for use on pedestrian gates.

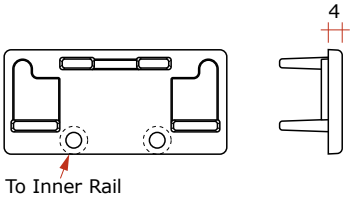

VRCG

CAP, TOP RAIL, GATES

Endcap for VRR Top Rail with countersunk holes for attachment to the Inner Rail using FV8-19. Principally for use on pedestrian gates.

FRAMED GATES & HARDWARE - (CONT'D)

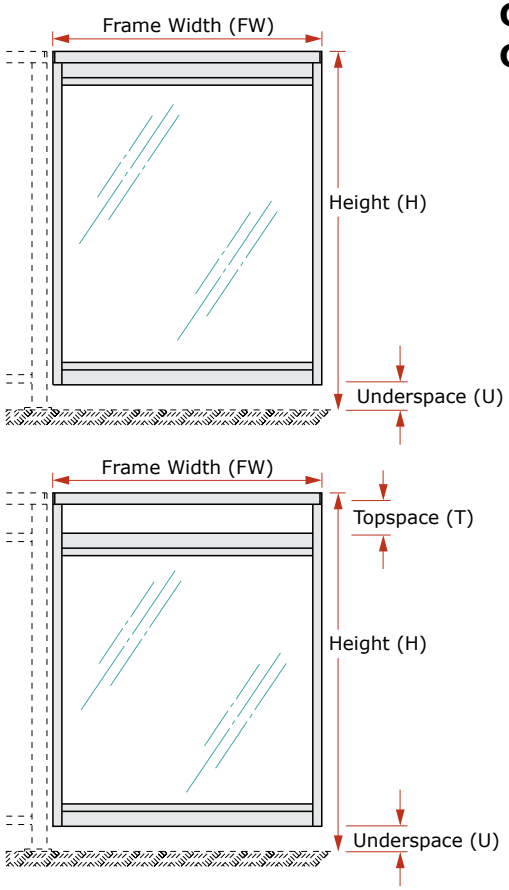

GFG-10
GFG-12

GATE FRAME, GLAZED STYLE

Assembled gate frame with similar appearance to glazed style options Avon or Camden. Does not include glass, pre-hanging, hinges, or hardware. Requires 6mm Toughened Safety glass.
GFG-10 = up to 1.0m high balustrade
GFG-12 = up to 1.2m high balustrade
Maximum width is 1.0m, but 0.8m to 0.9m width recommended.
When ordering, specify frame using the 3 or 4 dimensions illustrated (FW, H, U, and T if applicable), and the style name (with top rail specified).

FRAMED GATES & HARDWARE - (CONT'D)

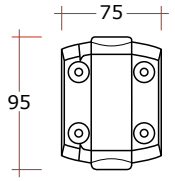

GHC1

GATE HINGE, SELF-CLOSING, TYPE 1

Tension adjustable spring loaded self closing moulded polymer hinge. For mounting framed baluster pool gates to aluminium posts. 30kg load rating per pair. 19mm Post/Gate gap. Ø5.5mm mounting holes. Commonly attached with 8 off FT14-25P screws.

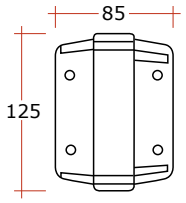

GHD1

GATE HINGE, SELF-CLOSING, HEAVY DUTY

Tension adjustable spring loaded self closing moulded polymer hinge. For mounting framed glass gates to aluminium posts. 60kg load rating per pair. 19mm Post/Gate gap. Ø5.5mm mounting holes. Commonly attached with 6 off FT14-25P screws.

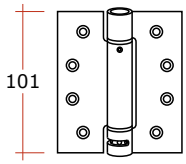

GHSC

GATE HINGE, SELF-CLOSING, S/S

Tension adjustable spring loaded self closing stainless steel hinge. For mounting framed gates to aluminium posts. 20kg load rating per pair. 6mm Post/Gate gap. Ø4mm Csk mounting holes. Commonly attached with 8 off FV10-19TR.T1 truncated screws (8 x 10g S/S fasteners).

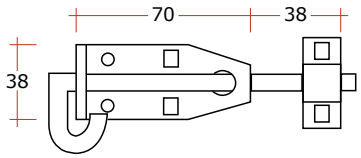

GBSS

GATE BOLT, SLIDING, S/S

316 Stainless Steel Sliding Bolt. May be used externally without powder coating. Commonly attached with 6 off FT10-19 screws.

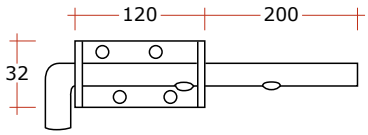

GBT

GATE BOLT, TOWER TYPE

Mounts vertically onto gate stile for securing one side of double opening gates. Bolt engages to a hole drilled in the pavement. Zinc plated, recommended to be powder coated for external use. Commonly attached with 4 off FT10-19 screws.

FRAMED GATES & HARDWARE - (CONT'D)

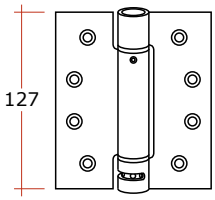

GHSD

GATE HINGE, SELF-CLOSING, S/S, HEAVY DUTY

Tension adjustable spring loaded self closing stainless steel hinge. For mounting framed glass gates to aluminium posts. 30kg load rating per pair. 6mm Post/Gate gap. Ø4mm Csk mounting holes. Commonly attached with 8 off FV10-19TR.T1 truncated screws (8 x 10g S/S fasteners).

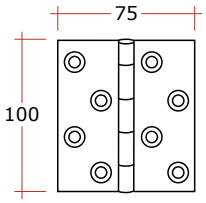

GHSS

GATE HINGE, STAINLESS STEEL

Standard Gate Hinge in stainless steel, Grade 304. For mounting framed glass gates to aluminium posts. 45kg load rating per pair. 10mm Post/Gate gap. Ø4mm Csk mounting holes. Commonly attached with 8 off FV10-19TR.T1 truncated screws (8 x 10g S/S fasteners).

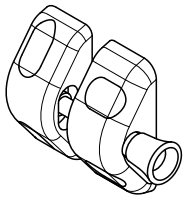

GLS

GATE LATCH, SIDE PULL

Self-engaging magnetic latch for framed non-pool gates. Gate face must be flush with mounting surface. 9mm Post/Gate gap. Ø4mm mounting holes. Requires a separate Gate stop (See GSA or GSP). Commonly attached with 4 off FT10-19 screws.
GLS = Moulded polymer, black finish.

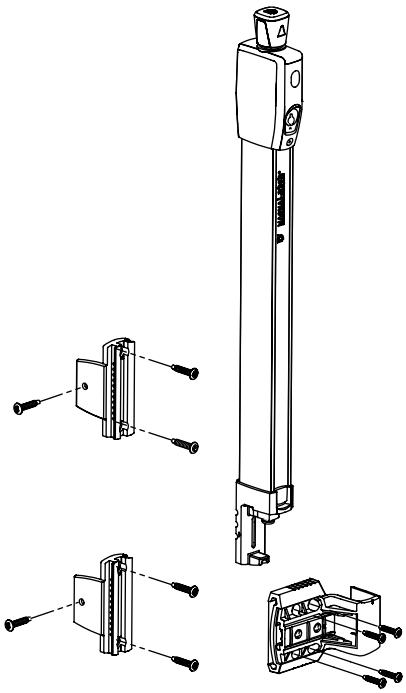

GLMT
GLV

GATE POOL LATCH, TOP PULL

A self-engaging moulded polymer magnetic latch for framed pool gates, which offers no resistance to the self closing mechanism. A separate gate stop is not required. Fasteners are included.
GLMT length allows the operating knob to be set at 1500mm high when mounted on a 1200mm high Gate. GLV is for use on 1500mm high Gates.
Gate face must be flush with mounting surface. 15mm Post/Gate gap. Ø4mm mounting holes. (Latch supplied may not be exactly as illustrated)
GLMT = Standard 520mm high latch.
GLV = Short 260mm high Latch.

FRAMED GATES & HARDWARE - (CONT'D)

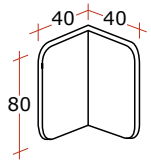

GSA

GATE STOP, ANGLE TYPE

Aluminium angle that prevents gate swinging past the closed position. One flange to be mounted on gate frame so that other flange strikes on the post. Foam or something similar should be attached to striking face. Holes to be drilled by the fabricator to suit. Commonly attached with 3 off FR5-4 rivets.

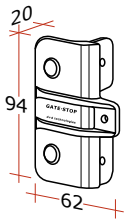

GSP

GATE STOP, POLYMER TYPE

Moulded polymer fitting that prevents gate swinging past the closed position. Mounted on gate frame so that flange strikes on the post. Ø4mm mounting holes. Commonly attached with 3 off FT10-19 screws (3 x 10g S/S fasteners).

SETTING BLOCKS, GASKETS, & WEDGES

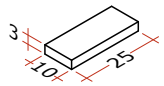

SBC

SETTING BLOCK

3 x 10 x 25mm, self adhesive backing.

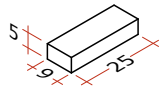

SBG

SETTING BLOCK FOR GATES

5 x 9 x 25mm, self adhesive backing.

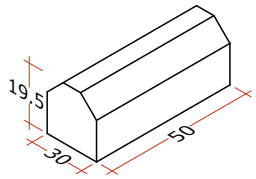

SBH

SETTING BLOCK, HIGH PROFILE

Santoprene setting block for supporting glass in ARN & VRL3 Lower Rails where the glass upper edge is being retained in PZT extrusion.

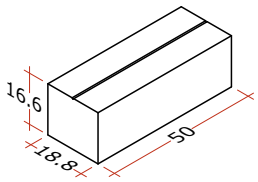

SBS

SETTING BLOCK, STANDARD

Santoprene setting block for supporting glass in ARN & VRL3 Lower Rails where the glass upper edge is being retained in DZT3 extrusion. Grooved side to face upwards. (Do not use where glass upper edge is being retained in PZT extrusion.)

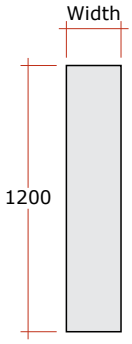

SG24-12
SG36-12
SG42-12
SG50-12
SG120-12

SIDE MOUNTING GASKET

Gaskets for side-mounting situations. Used to increase durability. Placed between post/bracket face and substrate face. 1.5mm thick Neoprene, with a self adhesive backing. No holes.

SG24-12 = 24mm(W) used with DKF & DKG2 brackets (refer pages 158 & 159)
SG36-12 = 36mm(W) used on 40mm(W) post
SG42-12 = 42mm(W) used on 50mm(W) post
SG50-12 = 50mm(W) used on 60mm(W) post
SG120-12 = Used for PK packers

SETTING BLOCKS, GASKETS, & WEDGES - (CONT'D)

SRG2-70-25
SRG2-70R

RETAINED BACK SEAL

A TPE glazing gasket for the outer or inaccessible glass face. Engages the screwpipe in certain rails, by sliding in prior to assembly. For 8 gauge screwpipes only. Typically used with 6mm and 8mm glass. Compressed thickness = approx 6.8mm
SRG70 applies to purchasing in 25m lengths.
SRG70R applies to purchasing in 100m rolls.

SRD-25
SRDR

RETAINED DOUBLE SEAL

Use on both sides of glass in certain rails retaining the top edge of glass panels. Inserts in rails prior to assembly. Do not use for glass lower edge. Typical uses include; both sides of glazing rails retaining the top edge of glass, both sides of glazing recessed type posts when receiving glass at an angle.
SRD-25 applies to purchasing in 25m lengths.
SRDR applies to purchasing in 100m rolls.

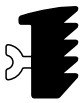

SRG40-25
SRG40R

RETAINED BACK SEAL

A TPE glazing gasket for the outer or inaccessible glass face. Engages the screwpipe in certain rails, by sliding in prior to assembly. For 8 gauge screwpipes only. Typically used with 10mm and 12mm thick glass, with appropriate wedge to suit. Compressed thickness = approx 4.2mm.
SRG40-25 applies to purchasing in 25m lengths.
SRG40R applies to purchasing in 100m rolls.

***SRE retained gasket has been superceded by SRG40*

SRR

RETAINED GASKET

Retained backing seal for certain applications, eg.- DZC Channel or MGG2 glazing angle in gate frames.
Compressed thickness = approx 1mm.

SRG20-25
SRG20R

RETAINED BACK SEAL, YELLOW RETAINER

A TPE glazing gasket for the outer or inaccessible glass face. Engages the screwpipe in certain rails, by sliding in prior to assembly. For 8 gauge screwpipes only. Refer to table on page 30 for appropriate wedge to suit.
SRG20-25 applies to purchasing in 25m lengths.
SRG20R applies to purchasing 100m rolls.

SETTING BLOCKS, GASKETS, & WEDGES - (CONT'D)

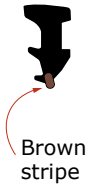

SWE35-25
SWE35R

WEDGE, 12MM GLASS, BROWN STRIPE

TPE wedge gasket (with a brown stripe) for use with 12mm glass in conjunction with SRG40 gasket in all lower rails and recessed posts with the exception of the DZC extrusion and non-90° corner posts. Also used in glass gates in conjunction with MGG2 and MGB2 extrusions with the SRR gasket and 6mm glass.
Compressed thickness = approx 3.5mm.
SWE35-25 applies to purchasing in 25m lengths.
SWE35R applies to purchasing in 100m rolls.

SWE50-25
SWE50R

WEDGE, 8MM GLASS, PURPLE STRIPE

TPE wedge gasket (with a purple stripe) for use with 8mm glass in conjunction with SRG70 gasket in all lower rails and recessed posts with the exception of the DZC extrusion and non-90° corner posts.
Compressed thickness = approx 5mm.
SRE50-25 applies to purchasing in 25m lengths.
SRE50R applies to purchasing in 100m rolls.

SWE55-25
SWE55R

WEDGE, 10MM GLASS, RED STRIPE

TPE wedge gasket (with a red stripe) for use with 10mm glass in conjunction with SRG40 gasket in all lower rails and recessed posts with the exception of the DZC extrusion and non-90° corner posts.
Compressed thickness = approx 5.5mm.
SRE55-25 applies to purchasing in 25m lengths.
SRE55R applies to purchasing in 100m rolls.

SWE70-25
SWE70R

WEDGE, 6MM GLASS, WHITE STRIPE

TPE wedge gasket (with a white stripe) for use with 6mm glass in conjunction with SRG70 gasket in all lower rails and recessed posts with the exception of the DZC extrusion and non-90° corner posts.
Compressed thickness = approx 7mm.
SRE70-25 applies to purchasing in 25m lengths.
SRE70R applies to purchasing in 100m rolls.

TYPICAL WEDGES FOR VARIOUS GLASS THICKNESSES

Glass Thickness	Retaining gasket	Wedge	Colour Code	Top Inner retaining gasket
6mm	SRG70	SWE70	White	SRD (Retained gasket on both sides of glass for push fit)
8mm	SRG70	SWE50	Purple	
11.2mm	SRG40	SWE50	Purple	
10mm	SRG40	SWE55	Red	
12mm	SRG40	SWE35	Brown	
15mm	SRG20	SWE25	-	

FASTENERS

The following pages give the part number key for each fastener type.

The current Price List gives actual part numbers (i.e. codes) for individual items which are available.

In the hypothetical codes given for the key guides below: 0 represents any number, and X represents any letter.

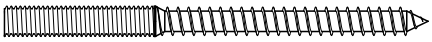

FA*0*-*00*

LAG SCREW

1ST NUMBER = Nominal Diameter, mm
2ND NUMBER = Screw Length, mm
SUFFIX: (none) = Stainless Steel

FA10-140 used for Arena-Points
FA10-80 used for Handrail Brackets to Timber

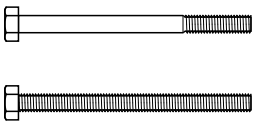

FB*0*-*00*

BOLTS, HEX HEAD

1ST NUMBER = Nominal Diameter, mm
2ND NUMBER = Bolt Length, mm
SUFFIX: (none) = Stainless Steel
G = Hot Dip Galvanized
MS = Mushroom Head

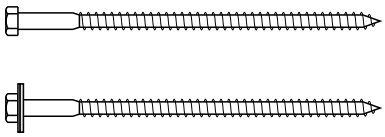

FCS*0*-*00*
FC*0*-*00*

COACHSCREWS

1ST NUMBER = Nominal Diameter, mm
2ND NUMBER = Screw Length, mm
SUFFIX: (none) = Stainless Steel
G = Hot Dip Galvanized
FCS0-00 is a coachscrew only.
FC0-00 is a coachscrew and washer set. E.g. for FC8-165 (which is a set of FCS8-165 & FW8-20N washers).

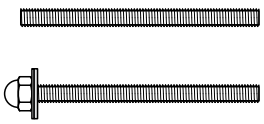

FE*0*-*00*

STUDS FOR EPOXY ANCHORING

For fastening of base plates to concrete substrates using injected epoxy method. Grade 316 Stainless Steel.
1ST NUMBER = Stud Diameter, mm
2ND NUMBER = Stud Overall Length, mm
SUFFIX: (none) = Stud only
S = Stud Set, Including Domenut and Std Washer
L = Stud Set, Including Domenut and Large Washer

FASTENERS - (CONT'D)

Internal 5mm hex drive on most sizes

FI0-00

CSK HD, SELF-DRILL TIMBER SCREWS

1ST NUMBER	=	Screw Gauge
2ND NUMBER	=	Length, mm
SUFFIX: (none)	=	Stainless Steel (Preferred)

FL0-00

PAN HEAD S/S MACHINE SCREWS

1ST NUMBER	=	Diameter, mm
2ND NUMBER	=	Length, mm
SUFFIX: (none)	=	Slot Drive
A	=	Allen Key Drive

FL10-70 Used for Handrail Brackets

FM0-00

CSK HEAD S/S MACHINE SCREWS

1ST NUMBER	=	Diameter, mm
2ND NUMBER	=	Length, mm
SUFFIX: (none)	=	Slot Drive
A	=	Allen Key Drive

HEX NUT

DOME NUT

NYLOC NUT

FN0X

NUTS

1ST NUMBER	=	Diameter, mm
SUFFIX: (none)	=	Standard Hex Nut
D	=	Dome Nut
N	=	Nyloc Nut (self locking)

FNC8B	=	M8, Black
FNC8W	=	M8, White
FNC10B	=	M10, Black
FNC10W	=	M10, White

FASTENERS - (CONT'D)

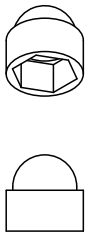

FNC0X

PLASTIC BOLT PROTECTION CAPS

1ST NUMBER = Diameter of corresponding nut, in mm

SUFFIX:
B = Black G = Grey W = White

FNC8B = M8, Black
FNC8W = M8, White
FNC10B = M10, Black
FNC10G = M10, Grey

FP0X

GATE HOLE PLUGS, 9.5MM

1ST NUMBER = Hole Diameter, mm (or Tube Internal Diameter)

SUFFIX:
B = Black
W = White

FP9B = Black
FP9W = White

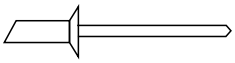

FS0-0

CSK HEAD BLIND RIVETS

Countersunk Head. (CSK Angle = 120°)

1ST NUMBER: INDICATES RIVET DIAMETER
4 = 3.2mm (Drill Ø3.3)
5 = 4.0mm (Drill Ø4.1)
6 = 4.8mm (Drill Ø4.9)

2ND NUMBER: INDICATES GRIP RANGE
4 = 4.8 to 6.4mm
5 = 6.4 to 7.9mm
6 = 7.9 to 9.5mm
8 = 11.1 to 12.7mm
10 = 14.3 to 15.9mm

SUFFIX:
(None) = aluminium rivet, steel stem
S = Stainless Steel Rivet
B = Black Aluminium

FS4-4B = Inner Rail Rivets, Silver
FS4-4 = Inner Rail Rivets, Black
FS4-6 = End Cap Rivets, Black
FS4-4B =

FASTENERS - (CONT'D)

FT0-00X

PAN HEAD S/S SELF TAPPING SCREWS

1ST NUMBER	=	Screw Gauge
2ND NUMBER	=	Length (mm)
SUFFIX: (none)	=	Square Drive
.T1	=	Treated to enhance durability
H	=	Self-drilling

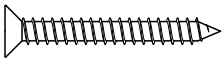

FV0-00X

CSK HEAD S/S SELF TAPPING SCREWS

As FT series above, but with a Countersunk Head. (CSK Angle = 90°)

SUFFIX: (none)	=	Square Drive
.T1	=	Treated to enhance durability
TR.T1	=	Truncated Head (for Hinges) and Treated to enhance durability

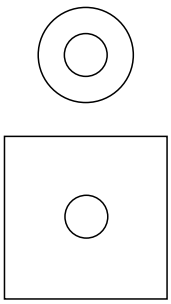

FW0-00X

FW8-22
FW8-20N
FW10-21
FW10-50SQ
FW12-21

STAINLESS STEEL FLAT WASHERS

1ST NUMBER	=	Diameter of corresponding screw or bolt, in mm
2ND NUMBER	=	Washer overall diameter/width
SUFFIX: (none)	=	Round Washer
SQ	=	Square Washer (Stainless Steel, 3mm thick)
N	=	Neoprene backed Washer

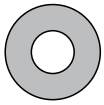

FWP0-00X

FWP8-22G
FWP10-22G
FWP10-24G

POLYMER WASHERS

1ST NUMBER	=	Diameter of corresponding screw or bolt, in mm
2ND NUMBER	=	Washer overall diameter/ width
SUFFIX:		
G	=	Grey

Principally used to provide a barrier between aluminium and stainless steel to enhance durability.

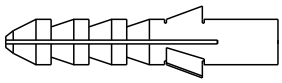

FY0-00

NYLON PLUG

1ST NUMBER	=	Plug / Hole Ø
2ND NUMBER	=	Length / Hole Depth (mm)

(Use FT or FV series screws; 10 gauge requires FY6, 12 or 14 gauge requires FY8).

FASTENERS - (CONT'D)

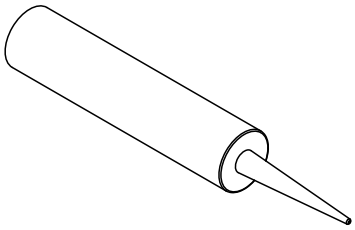

TAS70-03B

ADHESIVE

Elastic Simson ISR suitable for securing joints with UNEX handrails or firmly securing aesthetic end CAPS. 290ml cartridge

SUFFIX:
B = Black
G = Grey

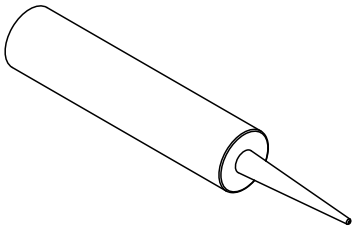

TASV60B

ADHESIVE

Structural Glazing silcone. 290ml cartridge

SUFFIX:
B = Black
C = Clear

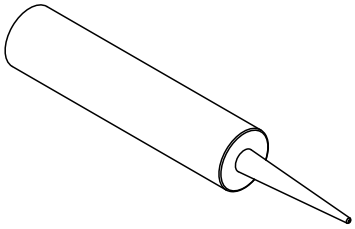

TASG

ADHESIVE, FOR SUBSTRATE FASTENERS

Adhesive Sika Supergrip 2 Hour. Used to increase substrate fastener pullout load rating, on timber decks in particular situations.
Will apply approx:
80 off FC8-165 top mounted fasteners, or
110 off FC8-165 side mounted fasteners

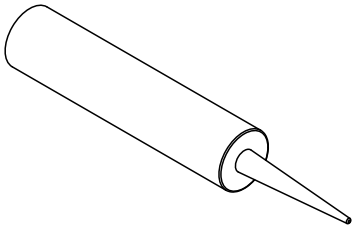

TASD-795

DOWSIL 795 STRUCTUAL GLAZING SILICONE FOR SUSPENDED JOINTS

Used for bonding glass to posts in Semi-Frameless balustrade systems with no side rail.

For Vetro and Surreal styles, both vertical edges of the glass shall be fully bonded to the posts using structural silicone, for the full height of the post and full thickness of the glass.

EPCON C6 EF

Epcon C6 EF series is classified as a 'Dangerous Goods' and therefore has freight complications.

TEC2

Epoxy cartridge Epcon C6 EF, 600ml. Will apply approx 63x FE8-105 studs or 45x FE10-115 studs. Nozzles not included.

TEG2

Dispensing gun for TEC epoxy cartridge.

TEN2

Disposable nozzle for TEC epoxy cartridge.

TOOLS & ACCESSORIES

TGL-05L

LANOLIN GREASE

Lanolin Grease. Used as coating to prevent corrosion and increase durability of fasteners and other products.

TGL-05L = 0.5 Litres of Grease

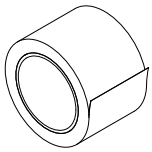

TSS75
TSS90

SEPARATOR TAPE

Single-sided UV stable tape used to separate baseplates from steel subtrates.

TSS75 = 75mm x 25m rolls.
TSS90 = 90mm x 25m rolls.

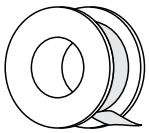

TTAM

TEFLON TAPE

Used to separate stainless steel fasteners where it could be in contact with unprotected aluminium, to enhance durability. 0.075mm thick x 10m tape.

CHAPTER 2 - FRAMED GLASS STYLE SPECIFICATIONS

Design Wind Speeds : General pg55

Design Wind Speeds : NZS 3604 ..... pg56

Glass Thickness Requirements pg57

Glass Thickness Requirements – Important Notice pg58

Balustrade Deflection pg59

SPEC ID	**STYLE SPECIFICATIONS**	
SS.25.05T	'Avon' (ART Top Rail)	pg60
SS.25.06T	'Avon' (PRR Top Rail)	pg61
SS.25.08T	'Avon' (VRE Top Rail)	pg62
SS.25.12T	'Avon' (VRR Top Rail)	pg63
SS.25.04T	'Avon' (VRT Top Rail)	pg64
SS.30.05T	'Camden' (ART Top Rail)	pg65
SS.30.06T	'Camden' (PRR Top Rail)	pg66
SS.30.08T	'Camden' (VRE Top Rail)	pg67
SS.30.12T	'Camden' (VRR Top Rail)	pg68
SS.30.04T	'Camden' (VRT Top Rail)	pg69
SS.40.05T	'Spectra' (ART Top Rail)	pg70
SS.40.06T	'Spectra' (PRR Top Rail)	pg71
SS.40.08T	'Spectra' (VRE Top Rail)	pg72
SS.40.12T	'Spectra' (VRR Top Rail)	pg73
SS.40.04T	'Spectra' (VRT Top Rail)	pg74
SS.41.05T	'Siena' (ART Top Rail)	pg75
SS.41.06T	'Siena' (PRR Top Rail)	pg76
SS.41.08T	'Siena' (VRE Top Rail)	pg77
SS.41.12T	'Siena' (VRR Top Rail)	pg78
SS.41.04T	'Siena' (VRT Top Rail)	pg79

DESIGN WIND SPEEDS : GENERAL

(1) For all balustrade styles with a solid infill e.g. Metropolis, Panorama, or Arena-Points the strength of the members and the fixings must be strong enough to resist the maximum ultimate wind load that is likely to be imposed upon them. This load can be determined from the ultimate Design Wind Speed applicable to the site and the balustrade location in the building.

(2) The Design Wind Speed must be determined from the appropriate New Zealand loading codes as follows:

(a) For all balustrades, the ultimate Design Wind Speed should be determined from AS/NZS 1170.2 Wind Actions for use with Loading Class N07C/N07R.

The Design Wind Speed for each building site may be determined from either:
(i) Directly from the method given in the applicable loading standard.
(ii) By referring to a "qualified engineer", the design engineer for the building, or the Territorial Authority.

(b) For buildings that are within the scope of NZS 3604:1999.

(c) The ultimate Design Wind Speed for residential type buildings should be determined from NZS 4203:2016 for use with No Fall Loading Class.

(3) In this manual, design wind pressures on external glazed or solid infill balustrade panels have been calculated from the formula below:

$$pu = 0.6\ Cpn.\ Vd^2$$

Where:
pu = the nett wind pressure on the infill in Pascals
Cpn = 1.2 and is defined in AS/NZS 1170.2 Appendix D
Vd = the ultimate design wind speed in metres per second derived from the appropriate standard for the balustrades location and position.

The above value of Cpn is appropriate for most balustrade situations, a higher value will apply where:
(a) the balustrade has a free end, i.e. it does not return to the building or the return has an open construction such a balusters.
(b) a balustrade on a roof top.

In these situations, reference should be made to a "qualified engineer" or "Wind Consultant" to determine an appropriate value for Cpn. Using this value of Cpn, calculate a revised value of effective wind speed Ve to determine the post or clamp spacing and glass thickness required from the tables in this Manual.

Where:
Ve = $0.91Vd\ Cpn^{1/2}$

Where:
Vd = the wind speed determined generally for this building

DESIGN WIND SPEEDS: NZS 3604

This method was the procedure given in NZS 3604:2011 to establish a Wind Zone and a corresponding Ultimate Design Wind Speed for a particular site. Pending the revision of NZS 3604 to align with AS/NZS 1170, this method should only used for barriers on timber framed residences with the consent of the Territorial Authority.

The Table below utilises the procedure given in Chapter 5 of NZS 3604:2011 *Timber Framed Buildings*. By following the steps in Table 5, an appropriate "Wind Zone" can be established for most building sites i.e. Low, Medium, High, Very High, or Extremely High.

These zones can be converted to Design Wind Speeds from the following Table.

WIND ZONE From Table 5.1 of NZS 3604:2011	DESIGN WIND SPEED (m/s)
L or M	37
H	44
VH	50
EH	55

These Wind Speeds can be used in the tables in Style Specification and Fixing Specification chapters to determine the post or clamp spacing for any balustrade.

GLASS THICKNESS REQUIREMENTS

The following is a summary of the requirements of NZS 4223 as current in 2008, as it relates to the use of toughened Glass in UNEX proprietary balustrades. NZS 4223 should be refered to for a full guide, and for subsequent amendments. UNEX Balustrades are not designed for use with laminated glass.

TABLE 1 - MINIMUM THICKNESS OF TOUGHENED GLASS FOR 'AVON' STYLE BALUSTRADES

LOADING CLASS	HEIGHT(1)	MAXIMUM DAYLIGHT OPENING(2)	MINIMUM PANE WIDTH(3)	WIND SPEED	MINIMUM THICKNESS OF TOUGHENED GLASS
N07C/N07R/N03R	1000mm	900mm	800mm or greater	Up to 68mps	6mm
			500mm to 800mm	Up to 70mps	8mm
	1100mm	1000mm	500mm or greater	Up to 70mps	8mm
	1200mm	1100mm	600mm or greater	Up to 70mps	8mm

1. HEIGHT 'H' is the overall height of the balustrade above the substrate level.
2. DAYLIGHT OPENING is the clear distance between members supporting the glass. Where this is exceeded, refer to the next higher opening size for the glass thickness.
3. PANE WIDTH is the width of the glass pane.

TABLE 2 - MINIMUM THICKNESS OF TOUGHENED GLASS FOR 'CAMDEN' STYLE BALUSTRADES

LOADING CLASS	HEIGHT(1)	MAXIMUM DAYLIGHT OPENING(2)	MINIMUM PANE WIDTH(3)	WIND SPEED	MINIMUM THICKNESS OF TOUGHENED GLASS
N07C/N07R/N03R	1000mm	800mm	600mm or greater	Up to 70mps	6mm
			500mm to 600mm	Up to 70mps	8mm
	1100mm	900mm	800mm or greater	Up to 68mps	6mm
			500mm or greater	Up to 70mps	8mm
	1200mm	1000mm	600mm or greater	Up to 70mps	8mm

1. HEIGHT 'H' is the overall height of the balustrade above the substrate level.
2. DAYLIGHT OPENING is the clear distance between members supporting the glass. Where this is exceeded, refer to the next higher opening size for the glass thickness.
3. PANE WIDTH is the width of the glass pane.

The following is a summary of the requirements of NZS 4223 as current in 2008, as it relates to the use of toughened Glass in UNEX proprietary balustrades. NZS 4223 should be refered to for a full guide, and for subsequent amendments. UNEX Balustrades are not designed for use with laminated glass.

TABLE 3 - MAXIMUM GLASS SPANS (METRES) FOR DIFFERENT TOUGHENED GLASS THICKNESS FOR THE 'SPECTRA' & 'SIENA' STYLE
Note: Post spacing must not exceed the given Style and Fixing Specifications from Chapters 2 & 3

LOADING CLASS	MINIMUM GLASS THICKNESS (mm)	Design Wind Speed															
		M		H			VH			EH							
		40	42	44	46	48	50	52	54	56	58	60	62	64	66	68	70
N07C/N07R/N03R	8	1.10	1.10	1.10	1.10	1.10	1.10	1.10	1.10	1.10	1.10	1.10	1.10	1.10	1.10	1.10	1.10
	10	1.65	1.65	1.65	1.65	1.65	1.65	1.65	1.65	1.65	1.65	1.65	1.61	1.57	1.53	1.50	1.48
	12	1.93	1.93	1.93	1.93	1.93	1.93	1.93	1.93	1.93	1.93	1.93	1.93	1.88	1.84	1.80	1.77

1. Glass spans in these tables are the clear spans between posts.
2. The overall height of the glass must not be less then the percentage shown in Table 5 of the actual glass span.

GLASS REQUIREMENTS – IMPORTANT NOTICE

1. GLASS MANUFACTURED TO AS/NZS 2208

All glass used in balustrading shall be Grade A Toughened Safety Glass, or Toughened-Laminated Safety Glass where specified, manufactured by a reputable glass manufacturer to meet the requirements of AS/NZS 2208. Glass shall be selected and used in accordance with the requirements of NZS 4223, which should be referred to for a full guide.

3. TOUGHENED LAMINATED SAFETY GLASS

For Toughened-Laminated Safety Glass, refer to the supplier fro suitability of the interlayer lamination in the location where it is being used. Some suppliers may allow for some delamination (causing an opaque frosted effect) over a period of time. UNEX Systems does not take responsibility for the suitability of the interlayer lamination.

3. GLASS THICKNESSES

The recently introduced Loading Code AS/NZS 1170 includes significant point loads on the glass edges. At the time of printing this manual, neither Standards New Zealand nor the Department of Building and Housing had published data on the required thickness of glass to withstand these loads. Additionally the glass thickness cannot be calculated by normal engineering methods.

The glass thicknesses and spans given in this manual are therefore based on either NZS 4223: Part 4:2008, AS 1288, previously published data from Glass Supply companies, or on the results of a series of point load tests conducted by UNEX. It is believed to be the most accurate information available at the time of publication to comply with the Building Code.

Please note however, that further research together with subsequent changes to the Building Code or other standards may modify some or all of this information.

BALUSTRADE DEFLECTION

GENERAL OVERVIEW

Balustrade deflection refers to the degree of 'movement' of the balustrade when certain load is applied. The practical relevance of this deflection relates to the subjective feeling one may experience when asserting a force on the balustrade, as excessive movement may cause a sense of apprehension. Deflection should not be confused with safety in respect of the ultimate balustrade strength to resist failure. A guideline for the amount of balustrade deflection deemed acceptable can be derived from "Guidance on Barrier Design" March 2012, published by what was then the Department of Building and Housing. Below are several relevant excerpts from clause 3.5 of this document relating to balustrade deflection. The original document should be referred to directly for further information if required.

- "Beyond the NZBC requirements for barriers to be of adequate strength and stiffness to sustain the applied loads without causing loss of amenity through undue deflection, there are no further mandatory requirements for deflections."
- "The total horizontal displacement is recommended not to exceed 30mm under barrier and wind loads described in B1/VM1."
- "For serviceability, the horizontal deflection of post or clamp and rail balustrade systems (measured at the handrail/top rail) may be considered acceptable if it does not exceed H/60 + L/240 or 30mm, whichever is smaller, where H is the height of the handrail/top rail above the top of the supporting structure (deck or slab) and L is the distance between the centres of the supporting posts to the handrail..."
-

APPLICATION IN THIS MANUAL

The specifications in this manual (Issue 12.0) have been calculated with a target maximum deflection not to exceed 30mm for frameless glass styles. These deflections may be exceeded by up to 10% for some "unlikely to occur" loading combinations.

'AVON' (ART TOP RAIL)

This specification details the members to be used for this style and the maximum spacing of the posts. A separate specification must be referred to for fixing to the substrate (refer to Chapter 3). Post spacing must not exceed the lesser of the spacing from both Chapter 2 and Chapter 3. Refer to Page 59 for notes on balustrade deflection.

1. Fabrication and Installation are to be in accordance with Assembly Specification AS.25.05T on Page 122 and all relevant portions of this manual.
2. Glass to be TOUGHENED GRADE A SAFETY GLASS with concealed edges finished Rough Arris and with exposed edges Flat Polished (unless otherwise specified) Support and glaze in accordance with the recommendations in this Manual and with NZS 4223. For glass thickness requirements, refer to Page 57.
3. The balustrade shall be constructed such that the geometry of the balustrade shall comply with Acceptable Solutions F4/AS1. This includes the following (but not limited to): The minimum barrier height requirement, the maximum gap allowable and the avoidance of non-complying toeholds.

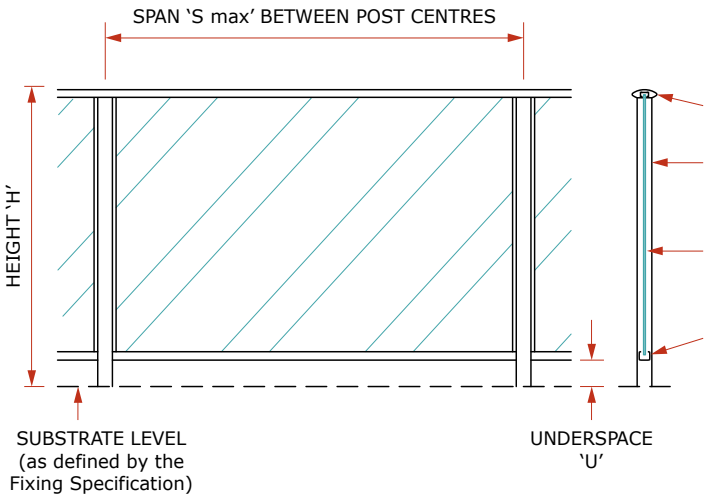

The balustrade shall be fabricated from the following items:

TOP RAIL: ART / PZT

POSTS: VPC, VPE2, VPH2 or VPM2 (as selected by the fabricator, refer to the table below).

TOUGHENED GLASS PANELS

LOWER RAIL: VRL3

MAXIMUM POST CENTRES 'S max' (metres)

ALWAYS TAKE THE LESSER OF THE VALUE BELOW AND THE VALUE FROM THE FIXING SPECIFICATION

HEIGHT(3)	POST TYPE(2)	Line No.	LOADING CLASS(1)																		
			N07C/N07R								N03R	Not Preventing Falls									
			Design Wind Speed(4)									Design Wind Speed(4)									
			VH			EH						M			H			VH			EH
			50	52	54	56	58	60	62	64	N/A	38	40	42	44	46	48	50	52	54	56
1.0	VPM2	1	0.99	0.99	0.99	0.99	0.92	0.86	0.81	0.76	1.45	1.51	1.51	1.51	1.51	1.47	1.35	1.24	1.15	1.06	0.99
	VPH2	2	1.25	1.25	1.25	1.24	1.16	1.08	1.01	0.95	1.45	1.51	1.51	1.51	1.51	1.51	1.51	1.51	1.44	1.34	1.24
	VPE	3	1.45	1.45	1.45	1.45	1.39	1.30	1.22	1.14	1.45	1.51	1.51	1.51	1.51	1.51	1.51	1.51	1.51	1.51	1.49
	RAILS ONLY	4	1.45	1.45	1.45	1.45	1.45	1.45	1.45	1.45	1.45	1.51	1.51	1.51	1.51	1.51	1.51	1.51	1.51	1.51	1.51
1.1	VPM2	5	0.90	0.90	0.88	0.82	0.76	0.71	0.67	0.62	1.45	1.51	1.51	1.45	1.32	1.21	1.11	1.02	0.95	0.88	0.82
	VPH2	6	1.13	1.13	1.10	1.02	0.95	0.89	0.84	0.78	1.45	1.51	1.51	1.51	1.51	1.51	1.39	1.28	1.19	1.10	1.02
	VPE	7	1.36	1.36	1.32	1.23	1.15	1.07	1.00	0.94	1.45	1.51	1.51	1.51	1.51	1.51	1.51	1.51	1.43	1.32	1.23
	RAILS ONLY	8	1.45	1.45	1.45	1.45	1.45	1.45	1.45	1.44	1.45	1.51	1.51	1.51	1.51	1.51	1.51	1.51	1.51	1.51	1.51
1.2	VPM2	9	0.74	0.71	0.66	0.61	0.57	0.53	0.50	0.47	1.45	1.33	1.20	1.09	0.99	0.91	0.83	0.77	0.71	0.66	0.61
	VPH2	10	0.93	0.89	0.82	0.77	0.71	0.67	0.62	0.59	1.45	1.51	1.50	1.36	1.24	1.14	1.04	0.96	0.89	0.82	0.77
	VPE	11	1.11	1.06	0.99	0.92	0.86	0.80	0.75	0.70	1.45	1.51	1.51	1.51	1.49	1.36	1.25	1.15	1.06	0.99	0.92
	RAILS ONLY	12	1.45	1.45	1.45	1.45	1.45	1.45	1.41	1.32	1.45	1.51	1.51	1.51	1.51	1.51	1.51	1.51	1.51	1.51	1.51

1. LOADING CLASS: Refer to Page 211 of this MANUAL for the scope of the Loading Class designations.
2. POST TYPES: Refer to Chapter 1 for details.
3. HEIGHT 'H': is the overall height of the balustrade above the substrate level shown. Interpolate for Heights between those shown.
4. DESIGN WIND SPEED: in m/s, Refer to Pages 55 to 56 for details of applicable wind codes and the methods for determining the Design Wind Speed.

'AVON' (PRR TOP RAIL)

This specification details the members to be used for this style and the maximum spacing of the posts. A separate specification must be referred to for fixing to the substrate (refer to Chapter 3). Post spacing must not exceed the lesser of the spacing from both Chapter 2 and Chapter 3. Refer to Page 59 for notes on balustrade deflection.

1. Fabrication and Installation are to be in accordance with Assembly Specification AS.25.06T on Page 123 and all relevant portions of this manual.
2. Glass to be TOUGHENED GRADE A SAFETY GLASS with concealed edges finished Rough Arris and with exposed edges Flat Polished (unless otherwise specified) Support and glaze in accordance with the recommendations in this Manual and with NZS 4223. For glass thickness requirements, refer to Page 57.
3. The balustrade shall be constructed such that the geometry of the balustrade shall comply with Acceptable Solutions F4/AS1. This includes the following (but not limited to): The minimum barrier height requirement, the maximum gap allowable and the avoidance of non-complying toeholds.

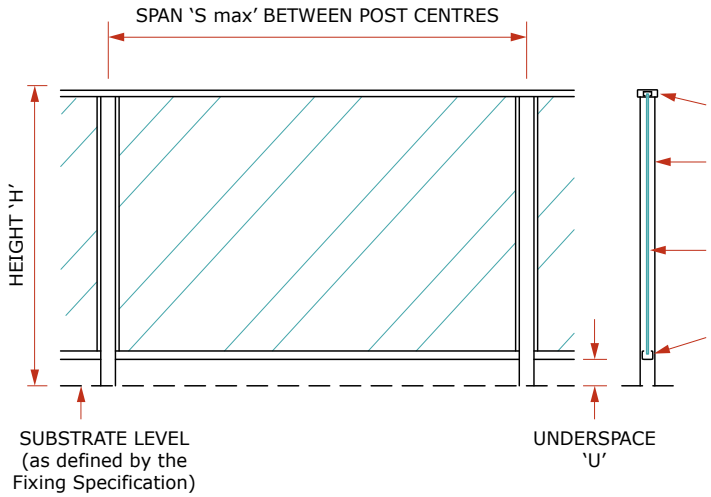

The balustrade shall be fabricated from the following items:

TOP RAIL: PRR/ PZT

POSTS: VPC, VPE2, VPH2 or VPM2 (as selected by the fabricator, refer to the table below).

TOUGHENED GLASS PANELS

LOWER RAIL: VRL3

MAXIMUM POST CENTRES 'S max' (metres)

ALWAYS TAKE THE LESSER OF THE VALUE BELOW AND THE VALUE FROM THE FIXING SPECIFICATION

HEIGHT(3)	POST TYPE(2)	Line No.	LOADING CLASS(1)																		
			N07C/N07R								N03R	Not Preventing Falls									
			Design Wind Speed(4)									Design Wind Speed(4)									
			VH		EH							M			H			VH		EH	
			50	52	54	56	58	60	62	64	N/A	38	40	42	44	46	48	50	52	54	56
1.0	VPM2	1	0.99	0.99	0.99	0.99	0.92	0.86	0.81	0.76	1.56	1.57	1.57	1.57	1.57	1.47	1.35	1.24	1.15	1.06	0.99
	VPH2	2	1.25	1.25	1.25	1.24	1.16	1.08	1.01	0.95	1.56	1.57	1.57	1.57	1.57	1.57	1.57	1.56	1.44	1.34	1.24
	VPE	3	1.50	1.50	1.50	1.49	1.39	1.30	1.22	1.14	1.56	1.57	1.57	1.57	1.57	1.57	1.57	1.57	1.57	1.57	1.49
	RAILS ONLY	4	1.56	1.56	1.56	1.56	1.56	1.56	1.56	1.56	1.56	1.57	1.57	1.57	1.57	1.57	1.57	1.57	1.57	1.57	1.57
1.1	VPM2	5	0.90	0.90	0.88	0.82	0.76	0.71	0.67	0.62	1.56	1.57	1.57	1.45	1.32	1.21	1.11	1.02	0.95	0.88	0.82
	VPH2	6	1.13	1.13	1.10	1.02	0.95	0.89	0.84	0.78	1.56	1.57	1.57	1.57	1.57	1.52	1.39	1.28	1.19	1.10	1.02
	VPE	7	1.36	1.36	1.32	1.23	1.15	1.07	1.00	0.94	1.56	1.57	1.57	1.57	1.57	1.57	1.57	1.54	1.43	1.32	1.23
	RAILS ONLY	8	1.56	1.56	1.56	1.56	1.56	1.56	1.53	1.44	1.56	1.57	1.57	1.57	1.57	1.57	1.57	1.57	1.57	1.57	1.57
1.2	VPM2	9	0.74	0.71	0.66	0.61	0.57	0.53	0.50	0.47	1.56	1.33	1.20	1.09	0.99	0.91	0.83	0.77	0.71	0.66	0.61
	VPH2	10	0.93	0.89	0.82	0.77	0.71	0.67	0.62	0.59	1.56	1.57	1.50	1.36	1.24	1.14	1.04	0.96	0.89	0.82	0.77
	VPE	11	1.11	1.06	0.99	0.92	0.86	0.80	0.75	0.70	1.56	1.57	1.57	1.57	1.49	1.36	1.25	1.15	1.06	0.99	0.92
	RAILS ONLY	12	1.56	1.56	1.56	1.56	1.56	1.50	1.41	1.32	1.56	1.57	1.57	1.57	1.57	1.57	1.57	1.57	1.57	1.57	1.57

1. LOADING CLASS: Refer to Page 211 of this MANUAL for the scope of the Loading Class designations.
2. POST TYPES: Refer to Chapter 1 for details.
3. HEIGHT 'H': is the overall height of the balustrade above the substrate level shown. Interpolate for Heights between those shown.
4. DESIGN WIND SPEED: in m/s, Refer to Pages 55 to 56 for details of applicable wind codes and the methods for determining the Design Wind Speed.

'AVON' (VRE TOP RAIL)

This specification details the members to be used for this style and the maximum spacing of the posts. A separate specification must be referred to for fixing to the substrate (refer to Chapter 3). Post spacing must not exceed the lesser of the spacing from both Chapter 2 and Chapter 3. Refer to Page 59 for notes on balustrade deflection.

1. Fabrication and Installation are to be in accordance with Assembly Specification AS.25.08T on Page 124 and all relevant portions of this manual.
2. Glass to be TOUGHENED GRADE A SAFETY GLASS with concealed edges finished Rough Arris and with exposed edges Flat Polished (unless otherwise specified) Support and glaze in accordance with the recommendations in this Manual and with NZS 4223. For glass thickness requirements, refer to Page 57.
3. The balustrade shall be constructed such that the geometry of the balustrade shall comply with Acceptable Solutions F4/AS1. This includes the following (but not limited to): The minimum barrier height requirement, the maximum gap allowable and the avoidance of non-complying toeholds.

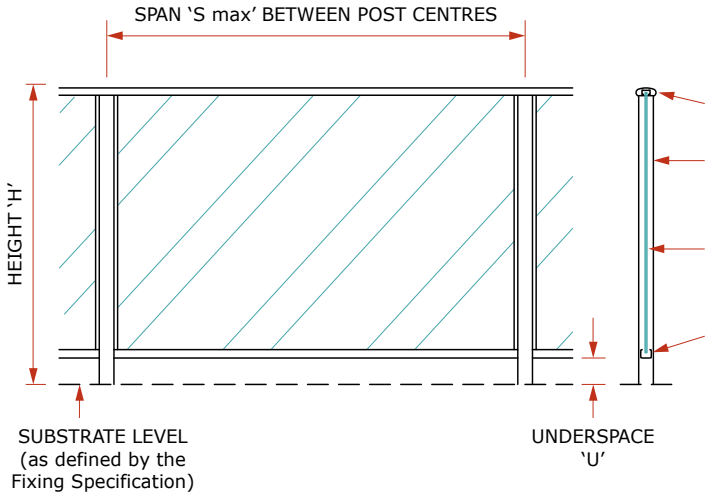

The balustrade shall be fabricated from the following items:

TOP RAIL: VRE / PZT

POSTS: VPC, VPE2, VPH2 or VPM2 (as selected by the fabricator, refer to the table below).

TOUGHENED GLASS PANELS

LOWER RAIL: VRL3

MAXIMUM POST CENTRES 'S max' (metres)

ALWAYS TAKE THE LESSER OF THE VALUE BELOW AND THE VALUE FROM THE FIXING SPECIFICATION

HEIGHT(3)	POST TYPE(2)	Line No.	LOADING CLASS(1)																		
			N07C/N07R								N03R	Not Preventing Falls									
			Design Wind Speed(4)									Design Wind Speed(4)									
			VH			EH						M			H			VH			EH
			50	52	54	56	58	60	62	64	N/A	38	40	42	44	46	48	50	52	54	56
1.0	VPM2	1	0.99	0.99	0.99	0.99	0.92	0.86	0.81	0.76	1.28	1.47	1.47	1.47	1.47	1.47	1.35	1.24	1.15	1.06	0.99
	VPH2	2	1.25	1.25	1.25	1.24	1.16	1.08	1.01	0.95	1.28	1.47	1.47	1.47	1.47	1.47	1.47	1.47	1.44	1.34	1.24
	VPE	3	1.28	1.28	1.28	1.28	1.28	1.28	1.22	1.14	1.28	1.47	1.47	1.47	1.47	1.47	1.47	1.47	1.47	1.47	1.47
	RAILS ONLY	4	1.28	1.28	1.28	1.28	1.28	1.28	1.28	1.28	1.28	1.47	1.47	1.47	1.47	1.47	1.47	1.47	1.47	1.47	1.47
1.1	VPM2	5	0.90	0.90	0.88	0.82	0.76	0.71	0.67	0.62	1.28	1.47	1.47	1.45	1.32	1.21	1.11	1.02	0.95	0.88	0.82
	VPH2	6	1.13	1.13	1.10	1.02	0.95	0.89	0.84	0.78	1.28	1.47	1.47	1.47	1.47	1.47	1.39	1.28	1.19	1.10	1.02
	VPE	7	1.28	1.28	1.28	1.23	1.15	1.07	1.00	0.94	1.28	1.47	1.47	1.47	1.47	1.47	1.47	1.47	1.43	1.32	1.23
	RAILS ONLY	8	1.28	1.28	1.28	1.28	1.28	1.28	1.28	1.28	1.28	1.47	1.47	1.47	1.47	1.47	1.47	1.47	1.47	1.47	1.47
1.2	VPM2	9	0.74	0.71	0.66	0.61	0.57	0.53	0.50	0.47	1.28	1.33	1.20	1.09	0.99	0.91	0.83	0.77	0.71	0.66	0.61
	VPH2	10	0.93	0.89	0.82	0.77	0.71	0.67	0.62	0.59	1.28	1.47	1.47	1.36	1.24	1.14	1.04	0.96	0.89	0.82	0.77
	VPE	11	1.11	1.06	0.99	0.92	0.86	0.80	0.75	0.70	1.28	1.47	1.47	1.47	1.47	1.36	1.25	1.15	1.06	0.99	0.92
	RAILS ONLY	12	1.28	1.28	1.28	1.28	1.28	1.28	1.28	1.28	1.28	1.47	1.47	1.47	1.47	1.47	1.47	1.47	1.47	1.47	1.47

1. LOADING CLASS: Refer to Page 211 of this MANUAL for the scope of the Loading Class designations.
2. POST TYPES: Refer to Chapter 1 for details.
3. HEIGHT 'H': is the overall height of the balustrade above the substrate level shown. Interpolate for Heights between those shown.
4. DESIGN WIND SPEED: in m/s, Refer to Pages 55 to 56 for details of applicable wind codes and the methods for determining the Design Wind Speed.

'AVON' (VRR TOP RAIL)

This specification details the members to be used for this style and the maximum spacing of the posts. A separate specification must be referred to for fixing to the substrate (refer to Chapter 3). Post spacing must not exceed the lesser of the spacing from both Chapter 2 and Chapter 3. Refer to Page 59 for notes on balustrade deflection.

1. Fabrication and Installation are to be in accordance with Assembly Specification AS.25.12T on Page 125 and all relevant portions of this manual.
2. Glass to be TOUGHENED GRADE A SAFETY GLASS with concealed edges finished Rough Arris and with exposed edges Flat Polished (unless otherwise specified) Support and glaze in accordance with the recommendations in this Manual and with NZS 4223. For glass thickness requirements, refer to Page 57.
3. The balustrade shall be constructed such that the geometry of the balustrade shall comply with Acceptable Solutions F4/AS1. This includes the following (but not limited to): The minimum barrier height requirement, the maximum gap allowable and the avoidance of non-complying toeholds.

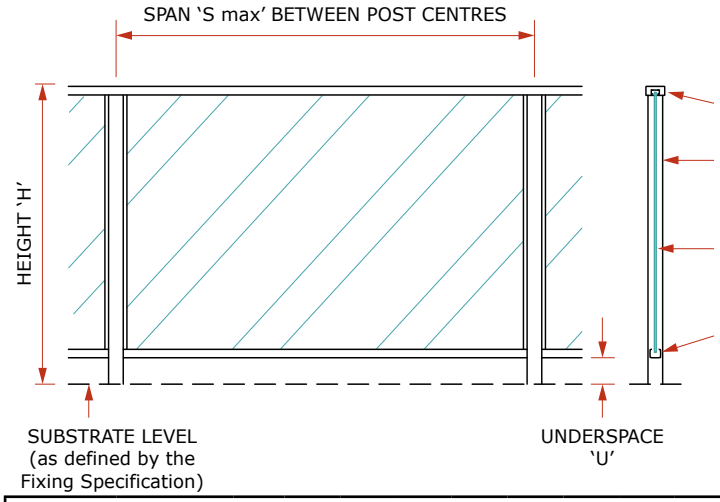

The balustrade shall be fabricated from the following items:

TOP RAIL: VRR / PZT

POSTS: VPC, VPE2, VPH2 or VPM2 (as selected by the fabricator, refer to the table below).

TOUGHENED GLASS PANELS

LOWER RAIL: VRL3

MAXIMUM POST CENTRES 'S max' (metres)

ALWAYS TAKE THE LESSER OF THE VALUE BELOW AND THE VALUE FROM THE FIXING SPECIFICATION

HEIGHT(3)	POST TYPE(2)	Line No.	LOADING CLASS(1)																		
			N07C/N07R								N03R	Not Preventing Falls									
			Design Wind Speed(4)									Design Wind Speed(4)									
			VH		EH							M			H			VH		EH	
			50	52	54	56	58	60	62	64	N/A	38	40	42	44	46	48	50	52	54	56
1.0	VPM2	1	0.99	0.99	0.99	0.99	0.92	0.86	0.81	0.76	1.70	1.75	1.75	1.75	1.60	1.47	1.35	1.24	1.15	1.06	0.99
	VPH2	2	1.25	1.25	1.25	1.24	1.16	1.08	1.01	0.95	1.70	1.75	1.75	1.75	1.75	1.75	1.69	1.56	1.44	1.34	1.24
	VPE	3	1.50	1.50	1.50	1.49	1.39	1.30	1.22	1.14	1.70	1.75	1.75	1.75	1.75	1.75	1.75	1.75	1.73	1.60	1.49
	RAILS ONLY	4	1.70	1.70	1.70	1.70	1.70	1.70	1.69	1.58	1.70	1.75	1.75	1.75	1.75	1.75	1.75	1.75	1.75	1.75	1.75
1.1	VPM2	5	0.90	0.90	0.88	0.82	0.76	0.71	0.67	0.62	1.70	1.75	1.60	1.45	1.32	1.21	1.11	1.02	0.95	0.88	0.82
	VPH2	6	1.13	1.13	1.10	1.02	0.95	0.89	0.84	0.78	1.70	1.75	1.75	1.75	1.66	1.52	1.39	1.28	1.19	1.10	1.02
	VPE	7	1.36	1.36	1.32	1.23	1.15	1.07	1.00	0.94	1.70	1.75	1.75	1.75	1.75	1.75	1.67	1.54	1.43	1.32	1.23
	RAILS ONLY	8	1.70	1.70	1.70	1.70	1.70	1.64	1.53	1.44	1.70	1.75	1.75	1.75	1.75	1.75	1.75	1.75	1.75	1.75	1.75
1.2	VPM2	9	0.74	0.71	0.66	0.61	0.57	0.53	0.50	0.47	1.59	1.33	1.20	1.09	0.99	0.91	0.83	0.77	0.71	0.66	0.61
	VPH2	10	0.93	0.89	0.82	0.77	0.71	0.67	0.62	0.59	1.70	1.66	1.50	1.36	1.24	1.14	1.04	0.96	0.89	0.82	0.77
	VPE	11	1.11	1.06	0.99	0.92	0.86	0.80	0.75	0.70	1.70	1.75	1.75	1.63	1.49	1.36	1.25	1.15	1.06	0.99	0.92
	RAILS ONLY	12	1.70	1.70	1.70	1.70	1.61	1.50	1.41	1.32	1.70	1.75	1.75	1.75	1.75	1.75	1.75	1.75	1.75	1.75	1.72

1. LOADING CLASS: Refer to Page 211 of this MANUAL for the scope of the Loading Class designations.
2. POST TYPES: Refer to Chapter 1 for details.
3. HEIGHT 'H': is the overall height of the balustrade above the substrate level shown. Interpolate for Heights between those shown.
4. DESIGN WIND SPEED: in m/s, Refer to Pages 55 to 56 for details of applicable wind codes and the methods for determining the Design Wind Speed.

'AVON' (VRT TOP RAIL)

This specification details the members to be used for this style and the maximum spacing of the posts. A separate specification must be referred to for fixing to the substrate (refer to Chapter 3). Post spacing must not exceed the lesser of the spacing from both Chapter 2 and Chapter 3. Refer to Page 59 for notes on balustrade deflection.

1. Fabrication and Installation are to be in accordance with Assembly Specification AS.25.04T on Page 126 and all relevant portions of this manual.
2. Glass to be TOUGHENED GRADE A SAFETY GLASS with concealed edges finished Rough Arris and with exposed edges Flat Polished (unless otherwise specified) Support and glaze in accordance with the recommendations in this Manual and with NZS 4223. For glass thickness requirements, refer to Page 57.
3. The balustrade shall be constructed such that the geometry of the balustrade shall comply with Acceptable Solutions F4/AS1. This includes the following (but not limited to): The minimum barrier height requirement, the maximum gap allowable and the avoidance of non-complying toeholds.

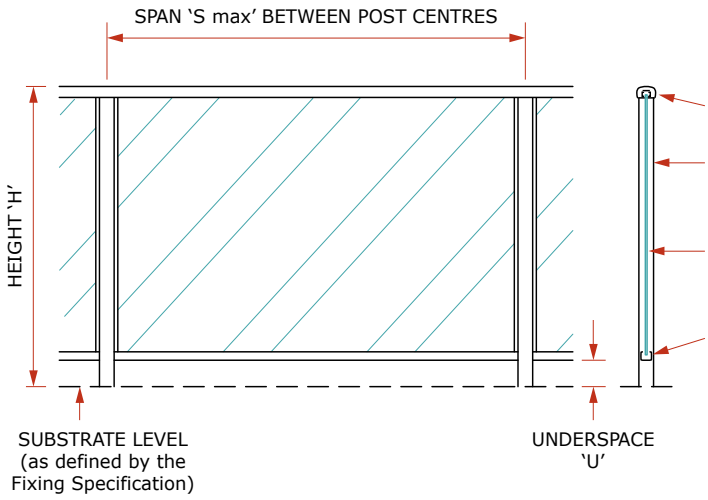

The balustrade shall be fabricated from the following items:

TOP RAIL: VRT / DZT3

POSTS: VPC, VPE2, VPH2 or VPM2 (as selected by the fabricator, refer to the table below).

TOUGHENED GLASS PANELS

LOWER RAIL: VRL3

MAXIMUM POST CENTRES 'S max' (metres)

ALWAYS TAKE THE LESSER OF THE VALUE BELOW AND THE VALUE FROM THE FIXING SPECIFICATION

HEIGHT(3)	POST TYPE(2)	Line No.	LOADING CLASS(1)																		
			N07C/N07R								N03R	Not Preventing Falls									
			Design Wind Speed(4)									Design Wind Speed(4)									
			VH			EH						M			H			VH		EH	
			50	52	54	56	58	60	62	64	N/A	38	40	42	44	46	48	50	52	54	56
1.0	VPM2	1	0.99	0.99	0.99	0.99	0.92	0.86	0.81	0.76	1.71	1.79	1.79	1.76	1.60	1.47	1.35	1.24	1.15	1.06	0.99
	VPH2	2	1.25	1.25	1.25	1.24	1.16	1.08	1.01	0.95	1.71	1.79	1.79	1.79	1.79	1.79	1.69	1.56	1.44	1.34	1.24
	VPE	3	1.50	1.50	1.50	1.49	1.39	1.30	1.22	1.14	1.79	1.79	1.79	1.79	1.79	1.79	1.79	1.79	1.73	1.60	1.49
	RAILS ONLY	4	1.79	1.79	1.79	1.79	1.75	1.71	1.67	1.58	1.79	1.79	1.79	1.79	1.79	1.79	1.79	1.79	1.79	1.79	1.79
1.1	VPM2	5	0.90	0.90	0.88	0.82	0.76	0.71	0.67	0.62	1.71	1.77	1.60	1.45	1.32	1.21	1.11	1.02	0.95	0.88	0.82
	VPH2	6	1.13	1.13	1.10	1.02	0.95	0.89	0.84	0.78	1.71	1.79	1.79	1.79	1.66	1.52	1.39	1.28	1.19	1.10	1.02
	VPE	7	1.36	1.36	1.32	1.23	1.15	1.07	1.00	0.94	1.71	1.79	1.79	1.79	1.79	1.79	1.67	1.54	1.43	1.32	1.23
	RAILS ONLY	8	1.79	1.79	1.77	1.73	1.69	1.64	1.53	1.44	1.79	1.79	1.79	1.79	1.79	1.79	1.79	1.79	1.79	1.77	1.73
1.2	VPM2	9	0.74	0.71	0.66	0.61	0.57	0.53	0.50	0.47	1.59	1.33	1.20	1.09	0.99	0.91	0.83	0.77	0.71	0.66	0.61
	VPH2	10	0.93	0.89	0.82	0.77	0.71	0.67	0.62	0.59	1.71	1.66	1.50	1.36	1.24	1.14	1.04	0.96	0.89	0.82	0.77
	VPE	11	1.11	1.06	0.99	0.92	0.86	0.80	0.75	0.70	1.71	1.79	1.79	1.63	1.49	1.36	1.25	1.15	1.06	0.99	0.92
	RAILS ONLY	12	1.79	1.77	1.72	1.68	1.61	1.50	1.41	1.32	1.79	1.79	1.79	1.79	1.79	1.79	1.79	1.79	1.77	1.72	1.68

1. LOADING CLASS: Refer to Page 211 of this MANUAL for the scope of the Loading Class designations.
2. POST TYPES: Refer to Chapter 1 for details.
3. HEIGHT 'H': is the overall height of the balustrade above the substrate level shown. Interpolate for Heights between those shown.
4. DESIGN WIND SPEED: in m/s, Refer to Pages 55 to 56 for details of applicable wind codes and the methods for determining the Design Wind Speed.

'CAMDEN' (ART TOP RAIL)

This specification details the members to be used for this style and the maximum spacing of the posts. A separate specification must be referred to for fixing to the substrate (refer to Chapter 3). Post spacing must not exceed the lesser of the spacing from both Chapter 2 and Chapter 3. Refer to Page 59 for notes on balustrade deflection.

1. Fabrication and Installation are to be in accordance with Assembly Specification AS.30.05T on Page 127 and all relevant portions of this manual.
2. Glass to be TOUGHENED GRADE A SAFETY GLASS with concealed edges finished Rough Arris and with exposed edges Flat Polished (unless otherwise specified) Support and glaze in accordance with the recommendations in this Manual and with NZS 4223. For glass thickness requirements, refer to Page 57.
3. The balustrade shall be constructed such that the geometry of the balustrade shall comply with Acceptable Solutions F4/AS1. This includes the following (but not limited to): The minimum barrier height requirement, the maximum gap allowable and the avoidance of non-complying toeholds.

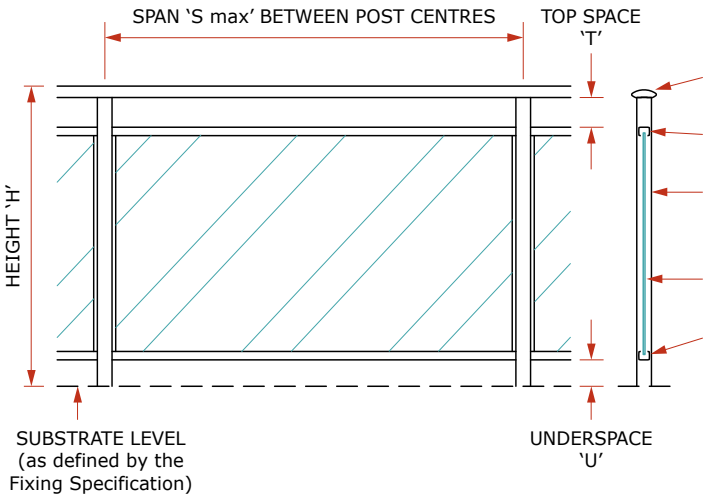

The balustrade shall be fabricated from the following items:

TOP RAIL: ART / DRH

MID RAIL: VRL2

POSTS: VPC, VPE2, VPH2 or VPM2 (as selected by the fabricator, refer to the table below).

TOUGHENED GLASS PANELS

LOWER RAIL: VRL3

MAXIMUM POST CENTRES 'S max' (metres)

ALWAYS TAKE THE LESSER OF THE VALUE BELOW AND THE VALUE FROM THE FIXING SPECIFICATION

HEIGHT(3)	POST TYPE(2)	Line No.	LOADING CLASS(1)																		
			N07C/N07R								N03R	Not Preventing Falls									
			Design Wind Speed(4)									Design Wind Speed(4)									
			VH			EH						M			H			VH		EH	
			50	52	54	56	58	60	62	64	N/A	38	40	42	44	46	48	50	52	54	56
1.0	VPM2	1	0.99	0.99	0.99	0.99	0.92	0.86	0.81	0.76	1.25	1.34	1.34	1.34	1.34	1.34	1.34	1.24	1.15	1.06	0.99
	VPH2	2	1.25	1.25	1.25	1.24	1.16	1.08	1.01	0.95	1.25	1.34	1.34	1.34	1.34	1.34	1.34	1.34	1.34	1.34	1.24
	VPE	3	1.25	1.25	1.25	1.25	1.25	1.25	1.22	1.14	1.25	1.34	1.34	1.34	1.34	1.34	1.34	1.34	1.34	1.34	1.34
	RAILS ONLY	4	1.25	1.25	1.25	1.25	1.25	1.25	1.25	1.25	1.25	1.34	1.34	1.34	1.34	1.34	1.34	1.34	1.34	1.34	1.34
1.1	VPM2	5	0.90	0.90	0.88	0.82	0.76	0.71	0.67	0.62	1.25	1.34	1.34	1.34	1.32	1.21	1.11	1.02	0.95	0.88	0.82
	VPH2	6	1.13	1.13	1.10	1.02	0.95	0.89	0.84	0.78	1.25	1.34	1.34	1.34	1.34	1.34	1.34	1.28	1.19	1.10	1.02
	VPE	7	1.25	1.25	1.25	1.23	1.15	1.07	1.00	0.94	1.25	1.34	1.34	1.34	1.34	1.34	1.34	1.34	1.34	1.32	1.23
	RAILS ONLY	8	1.25	1.25	1.25	1.25	1.25	1.25	1.25	1.25	1.25	1.34	1.34	1.34	1.34	1.34	1.34	1.34	1.34	1.34	1.34
1.2	VPM2	9	0.74	0.71	0.66	0.61	0.57	0.53	0.50	0.47	1.25	1.33	1.20	1.09	0.99	0.91	0.83	0.77	0.71	0.66	0.61
	VPH2	10	0.93	0.89	0.82	0.77	0.71	0.67	0.62	0.59	1.25	1.34	1.34	1.34	1.24	1.14	1.04	0.96	0.89	0.82	0.77
	VPE	11	1.11	1.06	0.99	0.92	0.86	0.80	0.75	0.70	1.25	1.34	1.34	1.34	1.34	1.34	1.25	1.15	1.06	0.99	0.92
	RAILS ONLY	12	1.25	1.25	1.25	1.25	1.25	1.25	1.25	1.25	1.25	1.34	1.34	1.34	1.34	1.34	1.34	1.34	1.34	1.34	1.34

1. LOADING CLASS: Refer to Page 211 of this MANUAL for the scope of the Loading Class designations.
2. POST TYPES: Refer to Chapter 1 for details.
3. HEIGHT 'H': is the overall height of the balustrade above the substrate level shown. Interpolate for Heights between those shown.
4. DESIGN WIND SPEED: in m/s, Refer to Pages 55 to 56 for details of applicable wind codes and the methods for determining the Design Wind Speed.

'CAMDEN' (PRR TOP RAIL)

This specification details the members to be used for this style and the maximum spacing of the posts. A separate specification must be referred to for fixing to the substrate (refer to Chapter 3). Post spacing must not exceed the lesser of the spacing from both Chapter 2 and Chapter 3. Refer to Page 59 for notes on balustrade deflection.

1. Fabrication and Installation are to be in accordance with Assembly Specification AS.30.06T on Page 128 and all relevant portions of this manual.
2. Glass to be TOUGHENED GRADE A SAFETY GLASS with concealed edges finished Rough Arris and with exposed edges Flat Polished (unless otherwise specified) Support and glaze in accordance with the recommendations in this Manual and with NZS 4223. For glass thickness requirements, refer to Page 57.
3. The balustrade shall be constructed such that the geometry of the balustrade shall comply with Acceptable Solutions F4/AS1. This includes the following (but not limited to): The minimum barrier height requirement, the maximum gap allowable and the avoidance of non-complying toeholds.

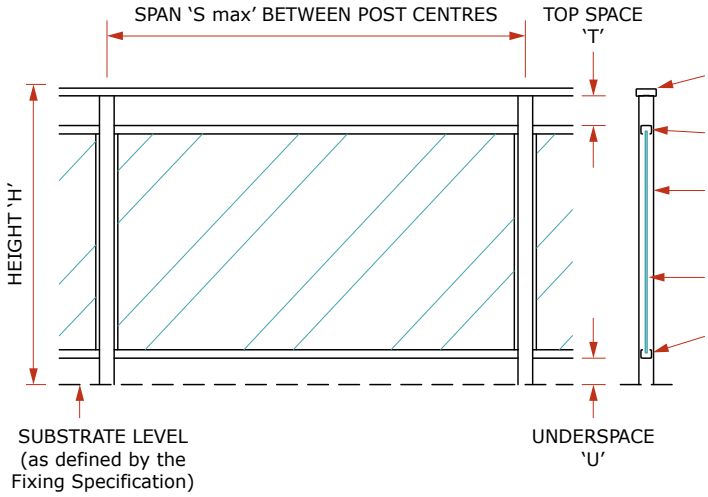

The balustrade shall be fabricated from the following items:

TOP RAIL: PRR / DRH

MID RAIL: VRL2

POSTS: VPC, VPE2, VPH2 or VPM2 (as selected by the fabricator, refer to the table below).

TOUGHENED GLASS PANELS

LOWER RAIL: VRL3

MAXIMUM POST CENTRES 'S max' (metres)

ALWAYS TAKE THE LESSER OF THE VALUE BELOW AND THE VALUE FROM THE FIXING SPECIFICATION

HEIGHT(3)	POST TYPE(2)	Line No.	LOADING CLASS(1)																		
			N07C/N07R								N03R	Not Preventing Falls									
			Design Wind Speed(4)									Design Wind Speed(4)									
			VH			EH						M			H			VH		EH	
			50	52	54	56	58	60	62	64	N/A	38	40	42	44	46	48	50	52	54	56
1.0	VPM2	1	0.99	0.99	0.99	0.99	0.92	0.86	0.81	0.76	1.41	1.41	1.41	1.41	1.41	1.41	1.35	1.24	1.15	1.06	0.99
	VPH2	2	1.25	1.25	1.25	1.24	1.16	1.08	1.01	0.95	1.41	1.41	1.41	1.41	1.41	1.41	1.41	1.41	1.41	1.34	1.24
	VPE	3	1.41	1.41	1.41	1.41	1.39	1.30	1.22	1.14	1.41	1.41	1.41	1.41	1.41	1.41	1.41	1.41	1.41	1.41	1.41
	RAILS ONLY	4	1.41	1.41	1.41	1.41	1.41	1.41	1.41	1.41	1.41	1.41	1.41	1.41	1.41	1.41	1.41	1.41	1.41	1.41	1.41
1.1	VPM2	5	0.90	0.90	0.88	0.82	0.76	0.71	0.67	0.62	1.41	1.41	1.41	1.41	1.32	1.21	1.11	1.02	0.95	0.88	0.82
	VPH2	6	1.13	1.13	1.10	1.02	0.95	0.89	0.84	0.78	1.41	1.41	1.41	1.41	1.41	1.41	1.39	1.28	1.19	1.10	1.02
	VPE	7	1.36	1.36	1.32	1.23	1.15	1.07	1.00	0.94	1.41	1.41	1.41	1.41	1.41	1.41	1.41	1.41	1.41	1.32	1.23
	RAILS ONLY	8	1.41	1.41	1.41	1.41	1.41	1.41	1.41	1.41	1.41	1.41	1.41	1.41	1.41	1.41	1.41	1.41	1.41	1.41	1.41
1.2	VPM2	9	0.74	0.71	0.66	0.61	0.57	0.53	0.50	0.47	1.41	1.33	1.20	1.09	0.99	0.91	0.83	0.77	0.71	0.66	0.61
	VPH2	10	0.93	0.89	0.82	0.77	0.71	0.67	0.62	0.59	1.41	1.41	1.41	1.36	1.24	1.14	1.04	0.96	0.89	0.82	0.77
	VPE	11	1.11	1.06	0.99	0.92	0.86	0.80	0.75	0.70	1.41	1.41	1.41	1.41	1.41	1.36	1.25	1.15	1.06	0.99	0.92
	RAILS ONLY	12	1.41	1.41	1.41	1.41	1.41	1.41	1.41	1.41	1.41	1.41	1.41	1.41	1.41	1.41	1.41	1.41	1.41	1.41	1.41

1. LOADING CLASS: Refer to Page 211 of this MANUAL for the scope of the Loading Class designations.
2. POST TYPES: Refer to Chapter 1 for details.
3. HEIGHT 'H': is the overall height of the balustrade above the substrate level shown. Interpolate for Heights between those shown.
4. DESIGN WIND SPEED: in m/s, Refer to Pages 55 to 56 for details of applicable wind codes and the methods for determining the Design Wind Speed.

'CAMDEN' (VRE TOP RAIL)

This specification details the members to be used for this style and the maximum spacing of the posts. A separate specification must be referred to for fixing to the substrate (refer to Chapter 3). Post spacing must not exceed the lesser of the spacing from both Chapter 2 and Chapter 3. Refer to Page 59 for notes on balustrade deflection.

1. Fabrication and Installation are to be in accordance with Assembly Specification AS.30.08T on Page 129 and all relevant portions of this manual.
2. Glass to be TOUGHENED GRADE A SAFETY GLASS with concealed edges finished Rough Arris and with exposed edges Flat Polished (unless otherwise specified) Support and glaze in accordance with the recommendations in this Manual and with NZS 4223. For glass thickness requirements, refer to Page 57.
3. The balustrade shall be constructed such that the geometry of the balustrade shall comply with Acceptable Solutions F4/AS1. This includes the following (but not limited to): The minimum barrier height requirement, the maximum gap allowable and the avoidance of non-complying toeholds.

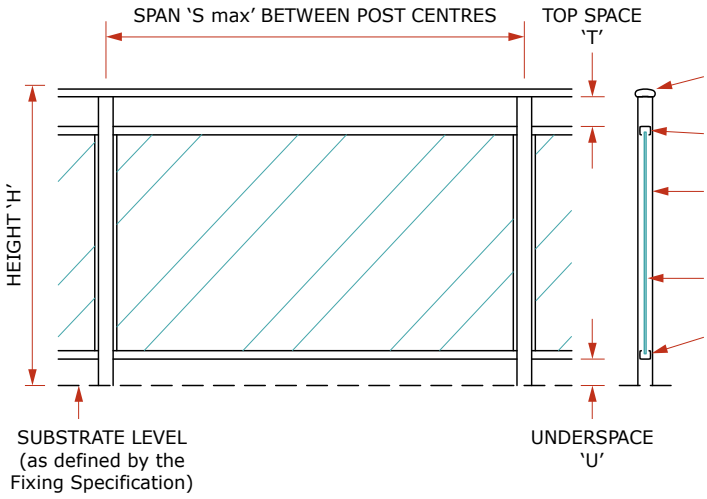

The balustrade shall be fabricated from the following items:

TOP RAIL: VRE / DRH

MID RAIL: VRL2

POSTS: VPC, VPE2, VPH2 or VPM2 (as selected by the fabricator, refer to the table below).

TOUGHENED GLASS PANELS

LOWER RAIL: VRL3

MAXIMUM POST CENTRES 'S max' (metres)

ALWAYS TAKE THE LESSER OF THE VALUE BELOW AND THE VALUE FROM THE FIXING SPECIFICATION

HEIGHT(3)	POST TYPE(2)	Line No.	LOADING CLASS(1)																		
			N07C/N07R								N03R	Not Preventing Falls									
			Design Wind Speed(4)									Design Wind Speed(4)									
			VH			EH						M			H			VH		EH	
			50	52	54	56	58	60	62	64	N/A	38	40	42	44	46	48	50	52	54	56
1.0	VPM2	1	0.93	0.93	0.93	0.93	0.92	0.86	0.81	0.76	0.93	1.13	1.13	1.13	1.13	1.13	1.13	1.13	1.13	1.06	0.99
	VPH2	2	0.93	0.93	0.93	0.93	0.93	0.93	0.93	0.93	0.93	1.13	1.13	1.13	1.13	1.13	1.13	1.13	1.13	1.13	1.13
	VPE	3	0.93	0.93	0.93	0.93	0.93	0.93	0.93	0.93	0.93	1.13	1.13	1.13	1.13	1.13	1.13	1.13	1.13	1.13	1.13
	RAILS ONLY	4	0.93	0.93	0.93	0.93	0.93	0.93	0.93	0.93	0.93	1.13	1.13	1.13	1.13	1.13	1.13	1.13	1.13	1.13	1.13
1.1	VPM2	5	0.90	0.90	0.88	0.82	0.76	0.71	0.67	0.62	0.93	1.13	1.13	1.13	1.13	1.13	1.11	1.02	0.95	0.88	0.82
	VPH2	6	0.93	0.93	0.93	0.93	0.93	0.89	0.84	0.78	0.93	1.13	1.13	1.13	1.13	1.13	1.13	1.13	1.13	1.10	1.02
	VPE	7	0.93	0.93	0.93	0.93	0.93	0.93	0.93	0.93	0.93	1.13	1.13	1.13	1.13	1.13	1.13	1.13	1.13	1.13	1.13
	RAILS ONLY	8	0.93	0.93	0.93	0.93	0.93	0.93	0.93	0.93	0.93	1.13	1.13	1.13	1.13	1.13	1.13	1.13	1.13	1.13	1.13
1.2	VPM2	9	0.74	0.71	0.66	0.61	0.57	0.53	0.50	0.47	0.93	1.13	1.13	1.09	0.99	0.91	0.83	0.77	0.71	0.66	0.61
	VPH2	10	0.93	0.89	0.82	0.77	0.71	0.67	0.62	0.59	0.93	1.13	1.13	1.13	1.13	1.13	1.04	0.96	0.89	0.82	0.77
	VPE	11	0.93	0.93	0.93	0.92	0.86	0.80	0.75	0.70	0.93	1.13	1.13	1.13	1.13	1.13	1.13	1.13	1.06	0.99	0.92
	RAILS ONLY	12	0.93	0.93	0.93	0.93	0.93	0.93	0.93	0.93	0.93	1.13	1.13	1.13	1.13	1.13	1.13	1.13	1.13	1.13	1.13

1. LOADING CLASS: Refer to Page 211 of this MANUAL for the scope of the Loading Class designations.
2. POST TYPES: Refer to Chapter 1 for details.
3. HEIGHT 'H': is the overall height of the balustrade above the substrate level shown. Interpolate for Heights between those shown.
4. DESIGN WIND SPEED: in m/s, Refer to Pages 55 to 56 for details of applicable wind codes and the methods for determining the Design Wind Speed.

'CAMDEN' (VRR TOP RAIL)

This specification details the members to be used for this style and the maximum spacing of the posts. A separate specification must be referred to for fixing to the substrate (refer to Chapter 3). Post spacing must not exceed the lesser of the spacing from both Chapter 2 and Chapter 3. Refer to Page 59 for notes on balustrade deflection.

1. Fabrication and Installation are to be in accordance with Assembly Specification AS.30.12T on Page 130 and all relevant portions of this manual.
2. Glass to be TOUGHENED GRADE A SAFETY GLASS with concealed edges finished Rough Arris and with exposed edges Flat Polished (unless otherwise specified) Support and glaze in accordance with the recommendations in this Manual and with NZS 4223. For glass thickness requirements, refer to Page 57.
3. The balustrade shall be constructed such that the geometry of the balustrade shall comply with Acceptable Solutions F4/AS1. This includes the following (but not limited to): The minimum barrier height requirement, the maximum gap allowable and the avoidance of non-complying toeholds.

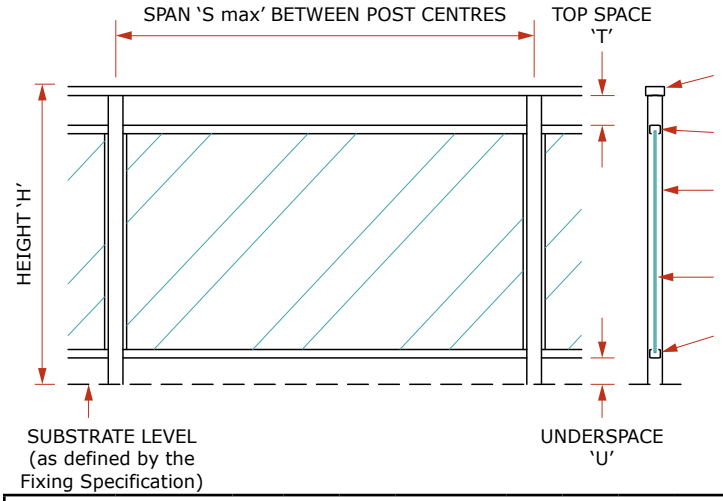

The balustrade shall be fabricated from the following items:

TOP RAIL: VRR / DRH

MID RAIL: VRL2

POSTS: VPC, VPE2, VPH2 or VPM2 (as selected by the fabricator, refer to the table below).

TOUGHENED GLASS PANELS

LOWER RAIL: VRL3

MAXIMUM POST CENTRES 'S max' (metres)

ALWAYS TAKE THE LESSER OF THE VALUE BELOW AND THE VALUE FROM THE FIXING SPECIFICATION

HEIGHT(3)	POST TYPE(2)	Line No.	LOADING CLASS(1)																		
			N07C/N07R								N03R	Not Preventing Falls									
			Design Wind Speed(4)									Design Wind Speed(4)									
			VH			EH						M			H			VH		EH	
			50	52	54	56	58	60	62	64	N/A	38	40	42	44	46	48	50	52	54	56
1.0	VPM2	1	0.99	0.99	0.99	0.99	0.92	0.86	0.81	0.76	1.62	1.62	1.62	1.62	1.60	1.47	1.35	1.24	1.15	1.06	0.99
	VPH2	2	1.25	1.25	1.25	1.24	1.16	1.08	1.01	0.95	1.62	1.62	1.62	1.62	1.62	1.62	1.62	1.56	1.44	1.34	1.24
	VPE	3	1.50	1.50	1.50	1.49	1.39	1.30	1.22	1.14	1.62	1.62	1.62	1.62	1.62	1.62	1.62	1.62	1.62	1.60	1.49
	RAILS ONLY	4	1.62	1.62	1.62	1.62	1.62	1.62	1.62	1.62	1.62	1.62	1.62	1.62	1.62	1.62	1.62	1.62	1.62	1.62	1.62
1.1	VPM2	5	0.90	0.90	0.88	0.82	0.76	0.71	0.67	0.62	1.62	1.62	1.60	1.45	1.32	1.21	1.11	1.02	0.95	0.88	0.82
	VPH2	6	1.13	1.13	1.10	1.02	0.95	0.89	0.84	0.78	1.62	1.62	1.62	1.62	1.62	1.52	1.39	1.28	1.19	1.10	1.02
	VPE	7	1.36	1.36	1.32	1.23	1.15	1.07	1.00	0.94	1.62	1.62	1.62	1.62	1.62	1.62	1.62	1.54	1.43	1.32	1.23
	RAILS ONLY	8	1.62	1.62	1.62	1.62	1.62	1.62	1.62	1.62	1.62	1.62	1.62	1.62	1.62	1.62	1.62	1.62	1.62	1.62	1.62
1.2	VPM2	9	0.74	0.71	0.66	0.61	0.57	0.53	0.50	0.47	1.59	1.33	1.20	1.09	0.99	0.91	0.83	0.77	0.71	0.66	0.61
	VPH2	10	0.93	0.89	0.82	0.77	0.71	0.67	0.62	0.59	1.62	1.62	1.50	1.36	1.24	1.14	1.04	0.96	0.89	0.82	0.77
	VPE	11	1.11	1.06	0.99	0.92	0.86	0.80	0.75	0.70	1.62	1.62	1.62	1.62	1.49	1.36	1.25	1.15	1.06	0.99	0.92
	RAILS ONLY	12	1.62	1.62	1.62	1.62	1.62	1.62	1.62	1.62	1.62	1.62	1.62	1.62	1.62	1.62	1.62	1.62	1.62	1.62	1.62

1. LOADING CLASS: Refer to Page 211 of this MANUAL for the scope of the Loading Class designations.
2. POST TYPES: Refer to Chapter 1 for details.
3. HEIGHT 'H': is the overall height of the balustrade above the substrate level shown. Interpolate for Heights between those shown.
4. DESIGN WIND SPEED: in m/s, Refer to Pages 55 to 56 for details of applicable wind codes and the methods for determining the Design Wind Speed.

'CAMDEN' (VRT TOP RAIL)

This specification details the members to be used for this style and the maximum spacing of the posts. A separate specification must be referred to for fixing to the substrate (refer to Chapter 3). Post spacing must not exceed the lesser of the spacing from both Chapter 2 and Chapter 3. Refer to Page 59 for notes on balustrade deflection.

1. Fabrication and Installation are to be in accordance with Assembly Specification AS.30.04T on Page 131 and all relevant portions of this manual.
2. Glass to be TOUGHENED GRADE A SAFETY GLASS with concealed edges finished Rough Arris and with exposed edges Flat Polished (unless otherwise specified) Support and glaze in accordance with the recommendations in this Manual and with NZS 4223. For glass thickness requirements, refer to Page 57.
3. The balustrade shall be constructed such that the geometry of the balustrade shall comply with Acceptable Solutions F4/AS1. This includes the following (but not limited to): The minimum barrier height requirement, the maximum gap allowable and the avoidance of non-complying toeholds.

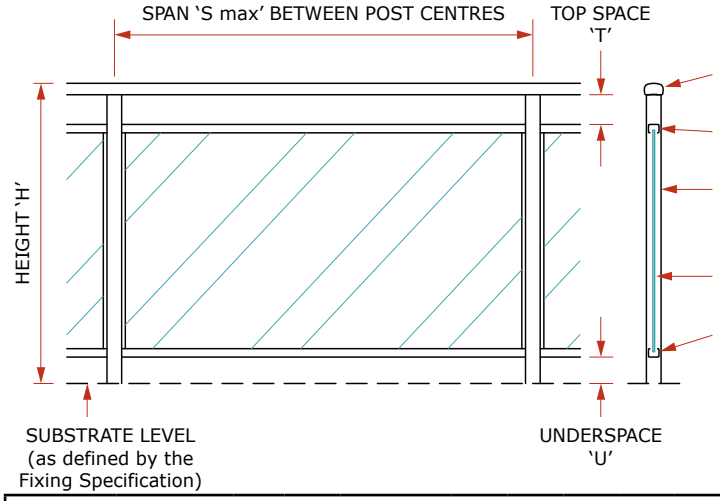

The balustrade shall be fabricated from the following items:

TOP RAIL: VRT / DRH

MID RAIL: VRL2

POSTS: VPC, VPE2, VPH2 or VPM2 (as selected by the fabricator, refer to the table below).

TOUGHENED GLASS PANELS

LOWER RAIL: VRL3

MAXIMUM POST CENTRES 'S max' (metres)

ALWAYS TAKE THE LESSER OF THE VALUE BELOW AND THE VALUE FROM THE FIXING SPECIFICATION

HEIGHT(3)	POST TYPE(2)	Line No.	LOADING CLASS(1)																		
			N07C/N07R								N03R	Not Preventing Falls									
			Design Wind Speed(4)									Design Wind Speed(4)									
			VH		EH							M			H			VH		EH	
			50	52	54	56	58	60	62	64	N/A	38	40	42	44	46	48	50	52	54	56
1.0	VPM2	1	0.99	0.99	0.99	0.99	0.92	0.86	0.81	0.76	1.54	1.57	1.57	1.57	1.57	1.47	1.35	1.24	1.15	1.06	0.99
	VPH2	2	1.25	1.25	1.25	1.24	1.16	1.08	1.01	0.95	1.54	1.57	1.57	1.57	1.57	1.57	1.57	1.56	1.44	1.34	1.24
	VPE	3	1.50	1.50	1.50	1.49	1.39	1.30	1.22	1.14	1.54	1.57	1.57	1.57	1.57	1.57	1.57	1.57	1.57	1.57	1.49
	RAILS ONLY	4	1.54	1.54	1.54	1.54	1.54	1.54	1.54	1.54	1.54	1.57	1.57	1.57	1.57	1.57	1.57	1.57	1.57	1.57	1.57
1.1	VPM2	5	0.90	0.90	0.88	0.82	0.76	0.71	0.67	0.62	1.54	1.57	1.57	1.45	1.32	1.21	1.11	1.02	0.95	0.88	0.82
	VPH2	6	1.13	1.13	1.10	1.02	0.95	0.89	0.84	0.78	1.54	1.57	1.57	1.57	1.57	1.52	1.39	1.28	1.19	1.10	1.02
	VPE	7	1.36	1.36	1.32	1.23	1.15	1.07	1.00	0.94	1.54	1.57	1.57	1.57	1.57	1.57	1.57	1.54	1.43	1.32	1.23
	RAILS ONLY	8	1.54	1.54	1.54	1.54	1.54	1.54	1.54	1.54	1.54	1.57	1.57	1.57	1.57	1.57	1.57	1.57	1.57	1.57	1.57
1.2	VPM2	9	0.74	0.71	0.66	0.61	0.57	0.53	0.50	0.47	1.54	1.33	1.20	1.09	0.99	0.91	0.83	0.77	0.71	0.66	0.61
	VPH2	10	0.93	0.89	0.82	0.77	0.71	0.67	0.62	0.59	1.54	1.57	1.50	1.36	1.24	1.14	1.04	0.96	0.89	0.82	0.77
	VPE	11	1.11	1.06	0.99	0.92	0.86	0.80	0.75	0.70	1.54	1.57	1.57	1.57	1.49	1.36	1.25	1.15	1.06	0.99	0.92
	RAILS ONLY	12	1.54	1.54	1.54	1.54	1.54	1.54	1.52	1.49	1.54	1.57	1.57	1.57	1.57	1.57	1.57	1.57	1.57	1.57	1.57

1. LOADING CLASS: Refer to Page 211 of this MANUAL for the scope of the Loading Class designations.
2. POST TYPES: Refer to Chapter 1 for details.
3. HEIGHT 'H': is the overall height of the balustrade above the substrate level shown. Interpolate for Heights between those shown.
4. DESIGN WIND SPEED: in m/s, Refer to Pages 55 to 56 for details of applicable wind codes and the methods for determining the Design Wind Speed.

'SPECTRA' (ART TOP RAIL)

This specification details the members to be used, glass thicknesses required and the maximum spacing for the various posts for this style. A separate specification must be referred to for fixing to the substrate (refer to Chapter 3). Post spacing must not exceed the lesser of the spacing from both Chapter 2 and Chapter 3. Refer to Page 59 for notes on balustrade deflection.

1. Glass shall be GRADE A SAFETY GLASS, TOUGHENED in accordance with AS/NZS 2208, with a minimum thickness as determined from the Table below. Glass shall be supported and glazed in accordance with NZS 4223. All exposed edges to be Flat Polished.
2. Fabrication and Installation to be in accordance with Assembly Specification AS.40.05T on Page 132, the Installation Guides in Chapter 5, and all other relevant portions of the UNEX Fabricators Manual.
3. APS2 and APE2 may be used for "top fixed" and shall be used for "side fixed" situations.
4. The balustrade shall be constructed such that the geometry of the balustrade shall comply with Acceptable Solutions F4/AS1. This includes the following (but not limited to): The minimum barrier height requirement, the maximum gap allowable and the avoidance of non-complying toeholds.

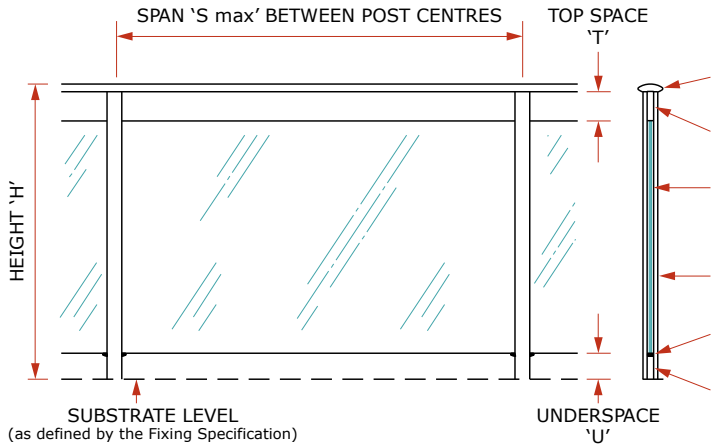

The balustrade shall be fabricated from the following items:

TOP RAIL: ART / DRH

INFILL: AIR

POSTS: APS2 or APE2 for in-line posts, APQ2 at 90º corners (see Note 3 above).

TOUGHENED GLASS PANELS. See Table Below.

BRACKET: AKS2

INSERT: AIA

MAXIMUM POST CENTRES 'S max' (metres)

ALWAYS TAKE THE LESSER OF THE VALUE BELOW AND THE VALUE FROM THE FIXING SPECIFICATION

HEIGHT(3)	POST TYPE(2)	Toughened Glass Thickness	Line No.	LOADING CLASS(1)																		
				N07C/N07R								N03R	Not Preventing Falls									
				Design Wind Speed(4)									Design Wind Speed(4)									
				VH			EH						M			H			VH			EH
				50	52	54	56	58	60	62	64	N/A	38	40	42	44	46	48	50	52	54	56
1.0	APS2	6	1	–	–	–	–	–	–	–	–	1.43	1.28	1.23	1.19	1.16	1.12	1.09	1.06	1.04	1.01	0.99
		8	2	1.17	1.17	1.17	1.17	1.17	1.13	1.06	0.99	1.45	1.45	1.45	1.45	1.45	1.45	1.45	1.42	1.38	1.35	1.29
		10	3	1.17	1.17	1.17	1.17	1.17	1.13	1.06	0.99	1.45	1.45	1.45	1.45	1.45	1.45	1.45	1.45	1.45	1.39	1.29
	APE2	10	4	1.45	1.45	1.45	1.45	1.45	1.45	1.45	1.40	1.45	1.45	1.45	1.45	1.45	1.45	1.45	1.45	1.45	1.45	1.45
		12	5	1.45	1.45	1.45	1.45	1.45	1.45	1.45	1.40	1.45	1.45	1.45	1.45	1.45	1.45	1.45	1.45	1.45	1.45	1.45
1.1	APS2	6	6	–	–	–	–	–	–	–	–	1.43	1.28	1.23	1.19	1.16	1.12	1.09	1.06	1.04	1.01	0.99
		8	7	1.05	1.05	1.05	1.04	0.97	0.91	0.85	0.80	1.45	1.45	1.45	1.45	1.45	1.45	1.42	1.31	1.21	1.12	1.04
		10	8	1.05	1.05	1.05	1.04	0.97	0.91	0.85	0.80	1.45	1.45	1.45	1.45	1.45	1.45	1.42	1.31	1.21	1.12	1.04
	APE2	10	9	1.45	1.45	1.45	1.45	1.38	1.29	1.21	1.13	1.45	1.45	1.45	1.45	1.45	1.45	1.45	1.45	1.45	1.45	1.45
		12	10	1.45	1.45	1.45	1.45	1.38	1.29	1.21	1.13	1.45	1.45	1.45	1.45	1.45	1.45	1.45	1.45	1.45	1.45	1.45
1.2	APS2	6	11	–	–	–	–	–	–	–	–	1.38	1.28	1.23	1.19	1.16	1.12	1.09	1.06	0.99	0.92	0.86
		8	12	0.94	0.94	0.92	0.86	0.80	0.75	0.70	0.66	1.45	1.45	1.45	1.45	1.39	1.27	1.17	1.07	0.99	0.92	0.86
		10	13	0.94	0.94	0.92	0.86	0.80	0.75	0.70	0.66	1.45	1.45	1.45	1.45	1.39	1.27	1.17	1.07	0.99	0.92	0.86
	APE2	10	14	1.33	1.33	1.31	1.22	1.13	1.06	0.99	0.93	1.45	1.45	1.45	1.45	1.45	1.45	1.45	1.45	1.41	1.31	1.22
		12	15	1.33	1.33	1.31	1.22	1.13	1.06	0.99	0.93	1.45	1.45	1.45	1.45	1.45	1.45	1.45	1.45	1.41	1.31	1.22

1. LOADING CLASS: Refer to Page 211 of this MANUAL for the scope of the Loading Class designations.
2. POST TYPES: Refer to Chapter 1 for details.
3. HEIGHT 'H': is the overall height of the balustrade above the substrate level shown. Interpolate for Heights between those shown.
4. DESIGN WIND SPEED: in m/s, Refer to Pages 55 to 56 for details of applicable wind codes and the methods for determining the Design Wind Speed.

'SPECTRA' (PRR TOP RAIL)

This specification details the members to be used, glass thicknesses required and the maximum spacing for the various posts for this style. A separate specification must be referred to for fixing to the substrate (refer to Chapter 3). Post spacing must not exceed the lesser of the spacing from both Chapter 2 and Chapter 3. Refer to Page 59 for notes on balustrade deflection.

1. Glass shall be GRADE A SAFETY GLASS, TOUGHENED in accordance with AS/NZS 2208, with a minimum thickness as determined from the Table below. Glass shall be supported and glazed in accordance with NZS 4223. All exposed edges to be Flat Polished.
2. Fabrication and Installation to be in accordance with Assembly Specification AS.40.06T on Page 133, the Installation Guides in Chapter 5, and all other relevant portions of the UNEX Fabricators Manual.
3. APS2 and APE2 may be used for "top fixed" and shall be used for "side fixed" situations.
4. The balustrade shall be constructed such that the geometry of the balustrade shall comply with Acceptable Solutions F4/AS1. This includes the following (but not limited to): The minimum barrier height requirement, the maximum gap allowable and the avoidance of non-complying toeholds.

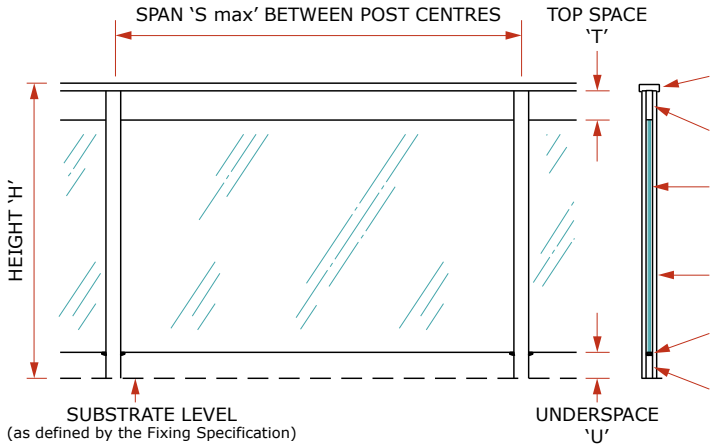

The balustrade shall be fabricated from the following items:
TOP RAIL: PRR / DRH

INFILL: AIR

POSTS: APS2 or APE2 for in-line posts, APQ2 at 90º corners (see Note 3 above).

TOUGHENED GLASS PANELS. See Table Below.

BRACKET: AKS2

INSERT: AIA

MAXIMUM POST CENTRES 'S max' (metres)

ALWAYS TAKE THE LESSER OF THE VALUE BELOW AND THE VALUE FROM THE FIXING SPECIFICATION

HEIGHT(3)	POST TYPE(2)	Toughened Glass Thickness	Line No.	LOADING CLASS(1)																		
				N07C/N07R								N03R	Not Preventing Falls									
				Design Wind Speed(4)									Design Wind Speed(4)									
				VH			EH						M			H			VH			EH
				50	52	54	56	58	60	62	64	N/A	38	40	42	44	46	48	50	52	54	56
1.0	APS2	6	1	–	–	–	–	–	–	–	–	1.43	1.28	1.23	1.19	1.16	1.12	1.09	1.06	1.04	1.01	0.99
		8	2	1.17	1.17	1.17	1.17	1.17	1.13	1.06	0.99	1.45	1.45	1.45	1.45	1.45	1.45	1.45	1.42	1.38	1.35	1.29
		10	3	1.17	1.17	1.17	1.17	1.17	1.13	1.06	0.99	1.45	1.45	1.45	1.45	1.45	1.45	1.45	1.45	1.45	1.39	1.29
	APE2	10	4	1.45	1.45	1.45	1.45	1.45	1.45	1.45	1.40	1.45	1.45	1.45	1.45	1.45	1.45	1.45	1.45	1.45	1.45	1.45
		12	5	1.45	1.45	1.45	1.45	1.45	1.45	1.45	1.40	1.45	1.45	1.45	1.45	1.45	1.45	1.45	1.45	1.45	1.45	1.45
1.1	APS2	6	6	–	–	–	–	–	–	–	–	1.43	1.28	1.23	1.19	1.16	1.12	1.09	1.06	1.04	1.01	0.99
		8	7	1.05	1.05	1.05	1.04	0.97	0.91	0.85	0.80	1.45	1.45	1.45	1.45	1.45	1.45	1.42	1.31	1.21	1.12	1.04
		10	8	1.05	1.05	1.05	1.04	0.97	0.91	0.85	0.80	1.45	1.45	1.45	1.45	1.45	1.45	1.42	1.31	1.21	1.12	1.04
	APE2	10	9	1.45	1.45	1.45	1.45	1.38	1.29	1.21	1.13	1.45	1.45	1.45	1.45	1.45	1.45	1.45	1.45	1.45	1.45	1.45
		12	10	1.45	1.45	1.45	1.45	1.38	1.29	1.21	1.13	1.45	1.45	1.45	1.45	1.45	1.45	1.45	1.45	1.45	1.45	1.45
1.2	APS2	6	11	–	–	–	–	–	–	–	–	1.38	1.28	1.23	1.19	1.16	1.12	1.09	1.06	0.99	0.92	0.86
		8	12	0.94	0.94	0.92	0.86	0.80	0.75	0.70	0.66	1.45	1.45	1.45	1.45	1.39	1.27	1.17	1.07	0.99	0.92	0.86
		10	13	0.94	0.94	0.92	0.86	0.80	0.75	0.70	0.66	1.45	1.45	1.45	1.45	1.39	1.27	1.17	1.07	0.99	0.92	0.86
	APE2	10	14	1.33	1.33	1.31	1.22	1.13	1.06	0.99	0.93	1.45	1.45	1.45	1.45	1.45	1.45	1.45	1.45	1.41	1.31	1.22
		12	15	1.33	1.33	1.31	1.22	1.13	1.06	0.99	0.93	1.45	1.45	1.45	1.45	1.45	1.45	1.45	1.45	1.41	1.31	1.22

1. LOADING CLASS: Refer to Page 211 of this MANUAL for the scope of the Loading Class designations.
2. POST TYPES: Refer to Chapter 1 for details.
3. HEIGHT 'H': is the overall height of the balustrade above the substrate level shown. Interpolate for Heights between those shown.
4. DESIGN WIND SPEED: in m/s, Refer to Pages 55 to 56 for details of applicable wind codes and the methods for determining the Design Wind Speed.

'SPECTRA' (VRE TOP RAIL)

This specification details the members to be used, glass thicknesses required and the maximum spacing for the various posts for this style. A separate specification must be referred to for fixing to the sub-strate (refer to Chapter 3). Post spacing must not exceed the lesser of the spacing from both Chapter 2 and Chapter 3. Refer to Page 59 for notes on balustrade deflection.

1. Glass shall be GRADE A SAFETY GLASS, TOUGHENED in accordance with AS/NZS 2208, with a minimum thickness as determined from the Table below. Glass shall be supported and glazed in accordance with NZS 4223. All exposed edges to be Flat Polished.
2. Fabrication and Installation to be in accordance with Assembly Specification AS.40.08T on Page 134, the Installation Guides in Chapter 5, and all other relevant portions of the UNEX Fabricators Manual.
3. APS2 and APE2 may be used for "top fixed" and shall be used for "side fixed" situations.
4. The balustrade shall be constructed such that the geometry of the balustrade shall comply with Acceptable Solutions F4/AS1. This includes the following (but not limited to): The minimum barrier height requirement, the maximum gap allowable and the avoidance of non-complying toeholds.

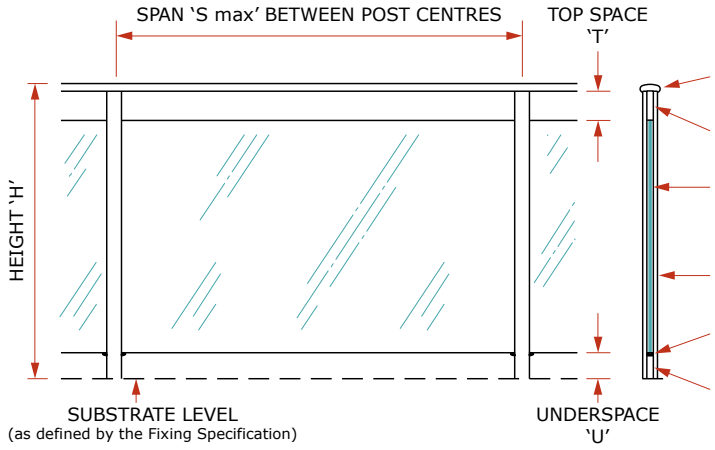

The balustrade shall be fabricated from the following items:

TOP RAIL: VRE / DRH

INFILL: AIR

POSTS: APS2 or APE2 for in-line posts, APQ2 at 90º corners (see Note 3 above).

TOUGHENED GLASS PANELS. See Table Below.

BRACKET: AKS2

INSERT: AIA

MAXIMUM POST CENTRES 'S max' (metres)

ALWAYS TAKE THE LESSER OF THE VALUE BELOW AND THE VALUE FROM THE FIXING SPECIFICATION

HEIGHT(3)	POST TYPE(2)	Toughened Glass Thickness	Line No.	LOADING CLASS(1)																		
				N07C/N07R								N03R	Not Preventing Falls									
				Design Wind Speed(4)									Design Wind Speed(4)									
				VH			EH						M			H			VH			EH
				50	52	54	56	58	60	62	64	N/A	38	40	42	44	46	48	50	52	54	56
1.0	APS2	6	1	–	–	–	–	–	–	–	–	1.33	1.28	1.23	1.19	1.16	1.12	1.09	1.06	1.04	1.01	0.99
		8	2	1.13	1.13	1.13	1.13	1.13	1.13	1.06	0.99	1.33	1.33	1.33	1.33	1.33	1.33	1.33	1.33	1.33	1.33	1.29
		10	3	1.13	1.13	1.13	1.13	1.13	1.13	1.06	0.99	1.33	1.33	1.33	1.33	1.33	1.33	1.33	1.33	1.33	1.33	1.29
	APE2	10	4	1.13	1.13	1.13	1.13	1.13	1.13	1.13	1.13	1.33	1.33	1.33	1.33	1.33	1.33	1.33	1.33	1.33	1.33	1.33
		12	5	1.13	1.13	1.13	1.13	1.13	1.13	1.13	1.13	1.33	1.33	1.33	1.33	1.33	1.33	1.33	1.33	1.33	1.33	1.33
1.1	APS2	6	6	–	–	–	–	–	–	–	–	1.33	1.28	1.23	1.19	1.16	1.12	1.09	1.06	1.04	1.01	0.99
		8	7	1.05	1.05	1.05	1.04	0.97	0.91	0.85	0.80	1.33	1.33	1.33	1.33	1.33	1.33	1.33	1.31	1.21	1.12	1.04
		10	8	1.05	1.05	1.05	1.04	0.97	0.91	0.85	0.80	1.33	1.33	1.33	1.33	1.33	1.33	1.33	1.31	1.21	1.12	1.04
	APE2	10	9	1.13	1.13	1.13	1.13	1.13	1.13	1.13	1.13	1.33	1.33	1.33	1.33	1.33	1.33	1.33	1.33	1.33	1.33	1.33
		12	10	1.13	1.13	1.13	1.13	1.13	1.13	1.13	1.13	1.33	1.33	1.33	1.33	1.33	1.33	1.33	1.33	1.33	1.33	1.33
1.2	APS2	6	11	–	–	–	–	–	–	–	–	1.33	1.28	1.23	1.19	1.16	1.12	1.09	1.06	0.99	0.92	0.86
		8	12	0.94	0.94	0.92	0.86	0.80	0.75	0.70	0.66	1.33	1.33	1.33	1.33	1.33	1.27	1.17	1.07	0.99	0.92	0.86
		10	13	0.94	0.94	0.92	0.86	0.80	0.75	0.70	0.66	1.33	1.33	1.33	1.33	1.33	1.27	1.17	1.07	0.99	0.92	0.86
	APE2	10	14	1.13	1.13	1.13	1.13	1.13	1.06	0.99	0.93	1.33	1.33	1.33	1.33	1.33	1.33	1.33	1.33	1.33	1.31	1.22
		12	15	1.13	1.13	1.13	1.13	1.13	1.06	0.99	0.93	1.33	1.33	1.33	1.33	1.33	1.33	1.33	1.33	1.33	1.31	1.22

1. LOADING CLASS: Refer to Page 211 of this MANUAL for the scope of the Loading Class designations.
2. POST TYPES: Refer to Chapter 1 for details.
3. HEIGHT 'H': is the overall height of the balustrade above the substrate level shown. Interpolate for Heights between those shown.
4. DESIGN WIND SPEED: in m/s, Refer to Pages 55 to 56 for details of applicable wind codes and the methods for determining the Design Wind Speed.

'SPECTRA' (VRR TOP RAIL)

This specification details the members to be used, glass thicknesses required and the maximum spacing for the various posts for this style. A separate specification must be referred to for fixing to the sub-strate (refer to Chapter 3). Post spacing must not exceed the lesser of the spacing from both Chapter 2 and Chapter 3. Refer to Page 59 for notes on balustrade deflection.

1. Glass shall be GRADE A SAFETY GLASS, TOUGHENED in accordance with AS/NZS 2208, with a minimum thickness as determined from the Table below. Glass shall be supported and glazed in accordance with NZS 4223. All exposed edges to be Flat Polished.
2. Fabrication and Installation to be in accordance with Assembly Specification AS.40.12T on Page 135, the Installation Guides in Chapter 5, and all other relevant portions of the UNEX Fabricators Manual.
3. APS2 and APE2 may be used for "top fixed" and shall be used for "side fixed" situations.
4. The balustrade shall be constructed such that the geometry of the balustrade shall comply with Acceptable Solutions F4/AS1. This includes the following (but not limited to): The minimum barrier height requirement, the maximum gap allowable and the avoidance of non-complying toeholds.

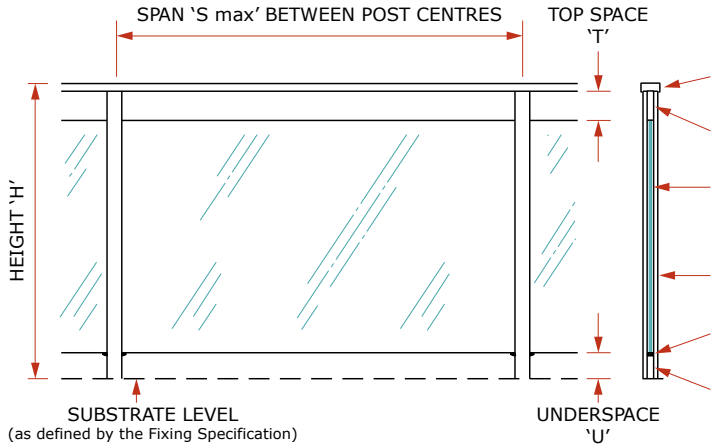

The balustrade shall be fabricated from the following items:

TOP RAIL: VRR / DRH

INFILL: AIR

POSTS: APS2 or APE2 for in-line posts, APQ2 at 90º corners (see Note 3 above).

TOUGHENED GLASS PANELS. See Table Below.

BRACKET: AKS2

INSERT: AIA

MAXIMUM POST CENTRES 'S max' (metres)

ALWAYS TAKE THE LESSER OF THE VALUE BELOW AND THE VALUE FROM THE FIXING SPECIFICATION

HEIGHT(3)	POST TYPE(2)	Toughened Glass Thickness	Line No.	LOADING CLASS(1)																		
				N07C/N07R								N03R	Not Preventing Falls									
				Design Wind Speed(4)									Design Wind Speed(4)									
				VH			EH						M			H			VH			EH
				50	52	54	56	58	60	62	64	N/A	38	40	42	44	46	48	50	52	54	56
1.0	APS2	6	1	–	–	–	–	–	–	–	–	1.43	1.28	1.23	1.19	1.16	1.12	1.09	1.06	1.04	1.01	0.99
		8	2	1.17	1.17	1.17	1.17	1.17	1.13	1.06	0.99	1.66	1.66	1.65	1.59	1.54	1.50	1.46	1.42	1.38	1.35	1.29
		10	3	1.17	1.17	1.17	1.17	1.17	1.13	1.06	0.99	1.66	1.66	1.66	1.66	1.66	1.66	1.66	1.62	1.50	1.39	1.29
	APE2	10	4	1.65	1.65	1.65	1.64	1.61	1.57	1.49	1.40	1.66	1.66	1.66	1.66	1.66	1.66	1.66	1.66	1.66	1.66	1.64
		12	5	1.65	1.65	1.65	1.65	1.65	1.60	1.49	1.40	1.66	1.66	1.66	1.66	1.66	1.66	1.66	1.66	1.66	1.66	1.66
1.1	APS2	6	6	–	–	–	–	–	–	–	–	1.43	1.28	1.23	1.19	1.16	1.12	1.09	1.06	1.04	1.01	0.99
		8	7	1.05	1.05	1.05	1.04	0.97	0.91	0.85	0.80	1.66	1.66	1.65	1.59	1.54	1.50	1.42	1.31	1.21	1.12	1.04
		10	8	1.05	1.05	1.05	1.04	0.97	0.91	0.85	0.80	1.66	1.66	1.66	1.66	1.66	1.55	1.42	1.31	1.21	1.12	1.04
	APE2	10	9	1.48	1.48	1.48	1.48	1.38	1.29	1.21	1.13	1.66	1.66	1.66	1.66	1.66	1.66	1.66	1.66	1.66	1.59	1.48
		12	10	1.48	1.48	1.48	1.48	1.38	1.29	1.21	1.13	1.66	1.66	1.66	1.66	1.66	1.66	1.66	1.66	1.66	1.59	1.48
1.2	APS2	6	11	–	–	–	–	–	–	–	–	1.38	1.28	1.23	1.19	1.16	1.12	1.09	1.06	0.99	0.92	0.86
		8	12	0.94	0.94	0.92	0.86	0.80	0.75	0.70	0.66	1.66	1.66	1.65	1.52	1.39	1.27	1.17	1.07	0.99	0.92	0.86
		10	13	0.94	0.94	0.92	0.86	0.80	0.75	0.70	0.66	1.66	1.66	1.66	1.52	1.39	1.27	1.17	1.07	0.99	0.92	0.86
	APE2	10	14	1.33	1.33	1.31	1.22	1.13	1.06	0.99	0.93	1.66	1.66	1.66	1.66	1.66	1.66	1.66	1.53	1.41	1.31	1.22
		12	15	1.33	1.33	1.31	1.22	1.13	1.06	0.99	0.93	1.66	1.66	1.66	1.66	1.66	1.66	1.66	1.53	1.41	1.31	1.22

1. LOADING CLASS: Refer to Page 211 of this MANUAL for the scope of the Loading Class designations.
2. POST TYPES: Refer to Chapter 1 for details.
3. HEIGHT 'H': is the overall height of the balustrade above the substrate level shown. Interpolate for Heights between those shown.
4. DESIGN WIND SPEED: in m/s, Refer to Pages 55 to 56 for details of applicable wind codes and the methods for determining the Design Wind Speed.

'SPECTRA' (VRT TOP RAIL)

This specification details the members to be used, glass thicknesses required and the maximum spacing for the various posts for this style. A separate specification must be referred to for fixing to the sub-strate (refer to Chapter 3). Post spacing must not exceed the lesser of the spacing from both Chapter 2 and Chapter 3. Refer to Page 59 for notes on balustrade deflection.

1. Glass shall be GRADE A SAFETY GLASS, TOUGHENED in accordance with AS/NZS 2208, with a minimum thickness as determined from the Table below. Glass shall be supported and glazed in accordance with NZS 4223. All exposed edges to be Flat Polished.
2. Fabrication and Installation to be in accordance with Assembly Specification AS.40.04T on Page 136, the Installation Guides in Chapter 5, and all other relevant portions of the UNEX Fabricators Manual.
3. APS2 and APE2 may be used for "top fixed" and shall be used for "side fixed" situations.
4. The balustrade shall be constructed such that the geometry of the balustrade shall comply with Acceptable Solutions F4/AS1. This includes the following (but not limited to): The minimum barrier height requirement, the maximum gap allowable and the avoidance of non-complying toeholds.

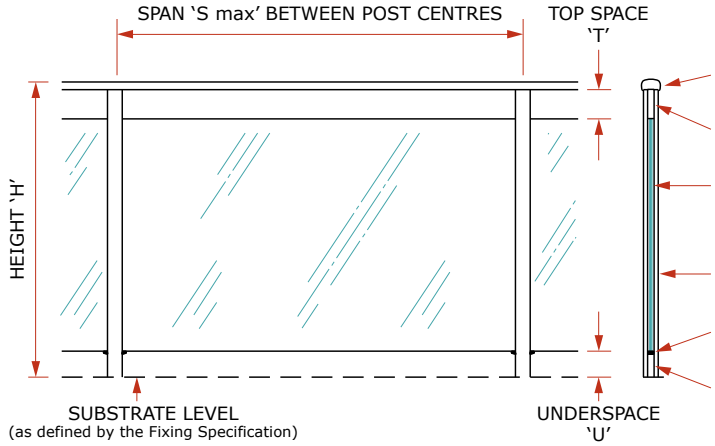

The balustrade shall be fabricated from the following items:

TOP RAIL: VRT / DRH

INFILL: AIR

POSTS: APS2 or APE2 for in-line posts, APQ2 at 90º corners (see Note 3 above).

TOUGHENED GLASS PANELS. See Table Below.

BRACKET: AKS2

INSERT: AIA

MAXIMUM POST CENTRES 'S max' (metres)

ALWAYS TAKE THE LESSER OF THE VALUE BELOW AND THE VALUE FROM THE FIXING SPECIFICATION

HEIGHT(3)	POST TYPE(2)	Toughened Glass Thickness	Line No.	LOADING CLASS(1)																		
				N07C/N07R								N03R	Not Preventing Falls									
				Design Wind Speed(4)									Design Wind Speed(4)									
				VH			EH						M			H			VH			EH
				50	52	54	56	58	60	62	64	N/A	38	40	42	44	46	48	50	52	54	56
1.0	APS2	6	1	–	–	–	–	–	–	–	–	1.43	1.28	1.23	1.19	1.16	1.12	1.09	1.06	1.04	1.01	0.99
		8	2	1.17	1.17	1.17	1.17	1.17	1.13	1.06	0.99	1.69	1.69	1.65	1.59	1.54	1.50	1.46	1.42	1.38	1.35	1.29
		10	3	1.17	1.17	1.17	1.17	1.17	1.13	1.06	0.99	1.69	1.69	1.69	1.69	1.69	1.69	1.69	1.62	1.50	1.39	1.29
	APE2	10	4	1.65	1.65	1.65	1.64	1.61	1.57	1.49	1.40	1.69	1.69	1.69	1.69	1.69	1.69	1.69	1.69	1.69	1.68	1.64
		12	5	1.65	1.65	1.65	1.65	1.65	1.60	1.49	1.40	1.69	1.69	1.69	1.69	1.69	1.69	1.69	1.69	1.69	1.69	1.69
1.1	APS2	6	6	–	–	–	–	–	–	–	–	1.43	1.28	1.23	1.19	1.16	1.12	1.09	1.06	1.04	1.01	0.99
		8	7	1.05	1.05	1.05	1.04	0.97	0.91	0.85	0.80	1.69	1.69	1.65	1.59	1.54	1.50	1.42	1.31	1.21	1.12	1.04
		10	8	1.05	1.05	1.05	1.04	0.97	0.91	0.85	0.80	1.69	1.69	1.69	1.69	1.69	1.55	1.42	1.31	1.21	1.12	1.04
	APE2	10	9	1.48	1.48	1.48	1.48	1.38	1.29	1.21	1.13	1.69	1.69	1.69	1.69	1.69	1.69	1.69	1.69	1.69	1.59	1.48
		12	10	1.48	1.48	1.48	1.48	1.38	1.29	1.21	1.13	1.69	1.69	1.69	1.69	1.69	1.69	1.69	1.69	1.69	1.59	1.48
1.2	APS2	6	11	–	–	–	–	–	–	–	–	1.38	1.28	1.23	1.19	1.16	1.12	1.09	1.06	0.99	0.92	0.86
		8	12	0.94	0.94	0.92	0.86	0.80	0.75	0.70	0.66	1.69	1.69	1.65	1.52	1.39	1.27	1.17	1.07	0.99	0.92	0.86
		10	13	0.94	0.94	0.92	0.86	0.80	0.75	0.70	0.66	1.69	1.69	1.68	1.52	1.39	1.27	1.17	1.07	0.99	0.92	0.86
	APE2	10	14	1.33	1.33	1.31	1.22	1.13	1.06	0.99	0.93	1.69	1.69	1.69	1.69	1.69	1.69	1.66	1.53	1.41	1.31	1.22
		12	15	1.33	1.33	1.31	1.22	1.13	1.06	0.99	0.93	1.69	1.69	1.69	1.69	1.69	1.69	1.66	1.53	1.41	1.31	1.22

1. LOADING CLASS: Refer to Page 211 of this MANUAL for the scope of the Loading Class designations.
2. POST TYPES: Refer to Chapter 1 for details.
3. HEIGHT 'H': is the overall height of the balustrade above the substrate level shown. Interpolate for Heights between those shown.
4. DESIGN WIND SPEED: in m/s, Refer to Pages 55 to 56 for details of applicable wind codes and the methods for determining the Design Wind Speed.

'SIENA' (ART TOP RAIL)

This specification details the members to be used, glass thicknesses required and the maximum spacing for the various posts for this style. A separate specification must be referred to for fixing to the sub-strate (refer to Chapter 3). Post spacing must not exceed the lesser of the spacing from both Chapter 2 and Chapter 3. Refer to Page 59 for notes on balustrade deflection.

1. Glass shall be GRADE A SAFETY GLASS, TOUGHENED in accordance with AS/NZS 2208, with a minimum thickness as determined from the Table below. Glass shall be supported and glazed in accordance with NZS 4223. All exposed edges to be Flat Polished.
2. Fabrication and Installation to be in accordance with Assembly Specification AS.41.05T on Page 137, the Installation Guides in Chapter 5, and all other relevant portions of the UNEX Fabricators Manual.
3. APS2 and APE2 may be used for "top fixed" and shall be used for "side fixed" situations.
4. The balustrade shall be constructed such that the geometry of the balustrade shall comply with Acceptable Solutions F4/AS1. This includes the following (but not limited to): The minimum barrier height requirement, the maximum gap allowable and the avoidance of non-complying toeholds.

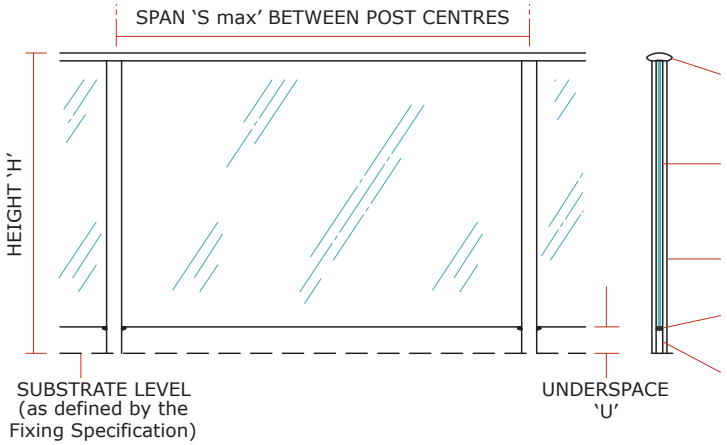

The balustrade shall be fabricated from the following items:

TOP RAIL: ART / PZT

POSTS: APS2 or APE2 for in-line posts, APQ2 at 90º corners (see Note 3 above).

TOUGHENED GLASS PANELS. See Table Below.

BRACKET: AKS2

INSERT: AIA

MAXIMUM POST CENTRES 'S max' (metres)

ALWAYS TAKE THE LESSER OF THE VALUE BELOW AND THE VALUE FROM THE FIXING SPECIFICATION

HEIGHT(3)	POST TYPE(2)	Toughened Glass Thickness	Line No.	LOADING CLASS(1)																		
				N07C/N07R								N03R	Not Preventing Falls									
				Design Wind Speed(4)									Design Wind Speed(4)									
				VH			EH						M			H			VH		EH	
				50	52	54	56	58	60	62	64	N/A	38	40	42	44	46	48	50	52	54	56
1.0	APS2	6	1	-	-	-	-	-	-	-	-	1.43	1.28	1.23	1.19	1.16	1.12	1.09	1.06	1.04	1.01	0.99
		8	2	1.12	1.12	1.12	1.12	1.12	1.08	1.01	0.95	1.45	1.45	1.45	1.45	1.45	1.45	1.45	1.42	1.38	1.33	1.24
		10	3	1.12	1.12	1.12	1.12	1.12	1.08	1.01	0.95	1.45	1.45	1.45	1.45	1.45	1.45	1.45	1.45	1.44	1.33	1.24
	APE2	10	4	1.45	1.45	1.45	1.45	1.45	1.45	1.44	1.35	1.45	1.45	1.45	1.45	1.45	1.45	1.45	1.45	1.45	1.45	1.45
		12	5	1.45	1.45	1.45	1.45	1.45	1.45	1.44	1.35	1.45	1.45	1.45	1.45	1.45	1.45	1.45	1.45	1.45	1.45	1.45
1.1	APS2	6	6	-	-	-	-	-	-	-	-	1.43	1.28	1.23	1.19	1.16	1.12	1.09	1.06	1.04	1.01	0.99
		8	7	1.00	1.00	1.00	0.99	0.93	0.86	0.81	0.76	1.45	1.45	1.45	1.45	1.45	1.45	1.35	1.25	1.15	1.07	0.99
		10	8	1.00	1.00	1.00	0.99	0.93	0.86	0.81	0.76	1.45	1.45	1.45	1.45	1.45	1.45	1.35	1.25	1.15	1.07	0.99
	APE2	10	9	1.42	1.42	1.42	1.42	1.32	1.23	1.16	1.08	1.45	1.45	1.45	1.45	1.45	1.45	1.45	1.45	1.45	1.45	1.42
		12	10	1.42	1.42	1.42	1.42	1.32	1.23	1.16	1.08	1.45	1.45	1.45	1.45	1.45	1.45	1.45	1.45	1.45	1.45	1.42
1.2	APS2	6	11	-	-	-	-	-	-	-	-	1.38	1.28	1.23	1.19	1.16	1.12	1.09	1.02	0.94	0.87	0.81
		8	12	0.89	0.89	0.87	0.81	0.76	0.71	0.66	0.62	1.45	1.45	1.45	1.44	1.31	1.20	1.10	1.02	0.94	0.87	0.81
		10	13	0.89	0.89	0.87	0.81	0.76	0.71	0.66	0.62	1.45	1.45	1.45	1.44	1.31	1.20	1.10	1.02	0.94	0.87	0.81
	APE2	10	14	1.28	1.28	1.25	1.16	1.08	1.01	0.95	0.89	1.45	1.45	1.45	1.45	1.45	1.45	1.45	1.45	1.34	1.25	1.16
		12	15	1.28	1.28	1.25	1.16	1.08	1.01	0.95	0.89	1.45	1.45	1.45	1.45	1.45	1.45	1.45	1.45	1.34	1.25	1.16

1. LOADING CLASS: Refer to Page 211 of this MANUAL for the scope of the Loading Class designations.
2. POST TYPES: Refer to Chapter 1 for details.
3. HEIGHT 'H': is the overall height of the balustrade above the substrate level shown. Interpolate for Heights between those shown.
4. DESIGN WIND SPEED: in m/s, Refer to Pages 55 to 56 for details of applicable wind codes and the methods for determining the Design Wind Speed.

'SIENA' (PRR TOP RAIL)

This specification details the members to be used, glass thicknesses required and the maximum spacing for the various posts for this style. A separate specification must be referred to for fixing to the sub-strate (refer to Chapter 3). Post spacing must not exceed the lesser of the spacing from both Chapter 2 and Chapter 3. Refer to Page 59 for notes on balustrade deflection.

1. Glass shall be GRADE A SAFETY GLASS, TOUGHENED in accordance with AS/NZS 2208, with a minimum thickness as determined from the Table below. Glass shall be supported and glazed in accordance with NZS 4223. All exposed edges to be Flat Polished.
2. Fabrication and Installation to be in accordance with Assembly Specification AS.41.06T on Page 138 the Installation Guides in Chapter 5, and all other relevant portions of the UNEX Fabricators Manual.
3. APS2 and APE2 may be used for "top fixed" and shall be used for "side fixed" situations.
4. The balustrade shall be constructed such that the geometry of the balustrade shall comply with Acceptable Solutions F4/AS1. This includes the following (but not limited to): The minimum barrier height requirement, the maximum gap allowable and the avoidance of non-complying toeholds.

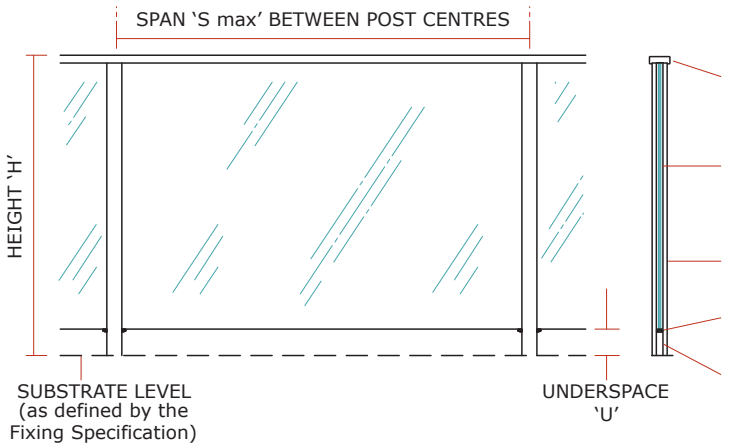

The balustrade shall be fabricated from the following items:

TOP RAIL: PRR / PZT

POSTS: APS2 or APE2 for in-line posts, APQ2 at 90º corners (see Note 3 above).

TOUGHENED GLASS PANELS. See Table Below.

BRACKET: AKS2

INSERT: AIA

MAXIMUM POST CENTRES 'S max' (metres)

ALWAYS TAKE THE LESSER OF THE VALUE BELOW AND THE VALUE FROM THE FIXING SPECIFICATION

HEIGHT[3]	POST TYPE[2]	Toughened Glass Thickness	Line No.	LOADING CLASS[1]																		
				N07C/N07R								N03R	Not Preventing Falls									
				Design Wind Speed[4]									Design Wind Speed[4]									
				VH			EH						M			H			VH			EH
				50	52	54	56	58	60	62	64	N/A	38	40	42	44	46	48	50	52	54	56
1.0	APS2	6	1	–	–	–	–	–	–	–	–	1.48	1.28	1.23	1.19	1.16	1.12	1.09	1.06	1.04	1.01	0.99
		8	2	1.12	1.12	1.12	1.12	1.12	1.08	1.01	0.95	1.69	1.69	1.65	1.59	1.54	1.50	1.46	1.42	1.38	1.33	1.24
		10	3	1.12	1.12	1.12	1.12	1.12	1.08	1.01	0.95	1.69	1.69	1.69	1.69	1.69	1.69	1.68	1.55	1.44	1.33	1.24
	APE2	10	4	1.59	1.59	1.59	1.59	1.59	1.53	1.44	1.35	1.69	1.69	1.69	1.69	1.69	1.69	1.69	1.69	1.69	1.68	1.64
		12	5	1.59	1.59	1.59	1.59	1.59	1.53	1.44	1.35	1.69	1.69	1.69	1.69	1.69	1.69	1.69	1.69	1.69	1.69	1.69
1.1	APS2	6	6	–	–	–	–	–	–	–	–	1.43	1.28	1.23	1.19	1.16	1.12	1.09	1.06	1.04	1.01	0.99
		8	7	1.00	1.00	1.00	0.99	0.93	0.86	0.81	0.76	1.69	1.69	1.65	1.59	1.54	1.47	1.35	1.25	1.15	1.07	0.99
		10	8	1.00	1.00	1.00	0.99	0.93	0.86	0.81	0.76	1.69	1.69	1.69	1.69	1.61	1.47	1.35	1.25	1.15	1.07	0.99
	APE2	10	9	1.42	1.42	1.42	1.42	1.32	1.23	1.16	1.08	1.69	1.69	1.69	1.69	1.69	1.69	1.69	1.69	1.64	1.52	1.42
		12	10	1.42	1.42	1.42	1.42	1.32	1.23	1.16	1.08	1.69	1.69	1.69	1.69	1.69	1.69	1.69	1.69	1.64	1.52	1.42
1.2	APS2	6	11	–	–	–	–	–	–	–	–	1.38	1.28	1.23	1.19	1.16	1.12	1.09	1.02	0.94	0.87	0.81
		8	12	0.89	0.89	0.87	0.81	0.76	0.71	0.66	0.62	1.69	1.69	1.59	1.44	1.31	1.20	1.10	1.02	0.94	0.87	0.81
		10	13	0.89	0.89	0.87	0.81	0.76	0.71	0.66	0.62	1.69	1.69	1.59	1.44	1.31	1.20	1.10	1.02	0.94	0.87	0.81
	APE2	10	14	1.28	1.28	1.25	1.16	1.08	1.01	0.95	0.89	1.69	1.69	1.69	1.69	1.69	1.69	1.58	1.45	1.34	1.25	1.16
		12	15	1.28	1.28	1.25	1.16	1.08	1.01	0.95	0.89	1.69	1.69	1.69	1.69	1.69	1.69	1.58	1.45	1.34	1.25	1.16

1. LOADING CLASS: Refer to Page 211 of this MANUAL for the scope of the Loading Class designations.
2. POST TYPES: Refer to Chapter 1 for details.
3. HEIGHT 'H': is the overall height of the balustrade above the substrate level shown. Interpolate for Heights between those shown.
4. DESIGN WIND SPEED: in m/s, Refer to Pages 55 to 56 for details of applicable wind codes and the methods for determining the Design Wind Speed.

'SIENA' (VRE TOP RAIL)

This specification details the members to be used, glass thicknesses required and the maximum spacing for the various posts for this style. A separate specification must be referred to for fixing to the substrate (refer to Chapter 3). Post spacing must not exceed the lesser of the spacing from both Chapter 2 and Chapter 3. Refer to Page 59 for notes on balustrade deflection.

1. Glass shall be GRADE A SAFETY GLASS, TOUGHENED in accordance with AS/NZS 2208, with a minimum thickness as determined from the Table below. Glass shall be supported and glazed in accordance with NZS 4223. All exposed edges to be Flat Polished.
2. Fabrication and Installation to be in accordance with Assembly Specification AS.41.08T on Page 139, the Installation Guides in Chapter 5, and all other relevant portions of the UNEX Fabricators Manual.
3. APS2 and APE2 may be used for "top fixed" and shall be used for "side fixed" situations.
4. The balustrade shall be constructed such that the geometry of the balustrade shall comply with Acceptable Solutions F4/AS1. This includes the following (but not limited to): The minimum barrier height requirement, the maximum gap allowable and the avoidance of non-complying toeholds.

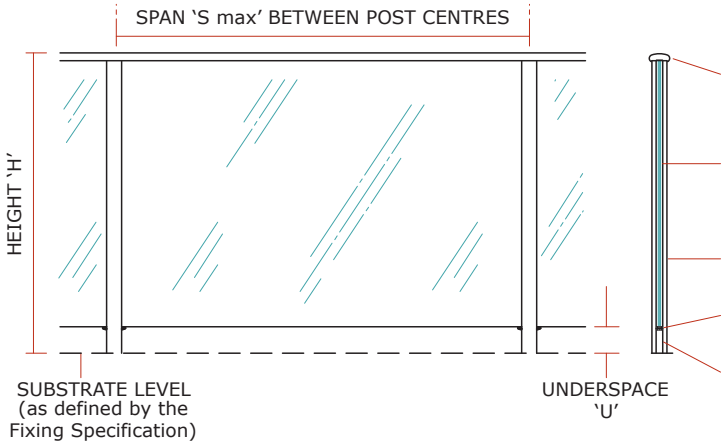

The balustrade shall be fabricated from the following items:

TOP RAIL: VRE / PZT

POSTS: APS2 or APE2 for in-line posts, APQ2 at 90º corners (see Note 3 above).

TOUGHENED GLASS PANELS. See Table Below.

BRACKET: AKS2

INSERT: AIA

MAXIMUM POST CENTRES 'S max' (metres)

ALWAYS TAKE THE LESSER OF THE VALUE BELOW AND THE VALUE FROM THE FIXING SPECIFICATION

HEIGHT(3)	POST TYPE(2)	Toughened Glass Thickness	Line No.	LOADING CLASS(1)																		
				N07C/N07R								N03R	Not Preventing Falls									
				Design Wind Speed(4)									Design Wind Speed(4)									
				VH			EH						M			H			VH			EH
				50	52	54	56	58	60	62	64	N/A	38	40	42	44	46	48	50	52	54	56
1.0	APS2	6		–	–	–	–	–	–	–	–	1.45	1.28	1.23	1.19	1.16	1.12	1.09	1.06	1.04	1.01	0.99
		8	2	1.12	1.12	1.12	1.12	1.12	1.08	1.01	0.95	1.45	1.45	1.45	1.45	1.45	1.45	1.45	1.42	1.38	1.33	1.24
		10	3	1.12	1.12	1.12	1.12	1.12	1.08	1.01	0.95	1.45	1.45	1.45	1.45	1.45	1.45	1.45	1.45	1.44	1.33	1.24
	APE2	10	4	1.45	1.45	1.45	1.45	1.45	1.45	1.44	1.35	1.45	1.45	1.45	1.45	1.45	1.45	1.45	1.45	1.45	1.45	1.45
		12	5	1.45	1.45	1.45	1.45	1.45	1.45	1.44	1.35	1.45	1.45	1.45	1.45	1.45	1.45	1.45	1.45	1.45	1.45	1.45
1.1	APS2	6	6	–	–	–	–	–	–	–	–	1.43	1.28	1.23	1.19	1.16	1.12	1.09	1.06	1.04	1.01	0.99
		8	7	1.00	1.00	1.00	0.99	0.93	0.86	0.81	0.76	1.45	1.45	1.45	1.45	1.45	1.45	1.35	1.25	1.15	1.07	0.99
		10	8	1.00	1.00	1.00	0.99	0.93	0.86	0.81	0.76	1.45	1.45	1.45	1.45	1.45	1.45	1.35	1.25	1.15	1.07	0.99
	APE2	10	9	1.42	1.42	1.42	1.42	1.32	1.23	1.16	1.08	1.45	1.45	1.45	1.45	1.45	1.45	1.45	1.45	1.45	1.45	1.42
		12	10	1.42	1.42	1.42	1.42	1.32	1.23	1.16	1.08	1.45	1.45	1.45	1.45	1.45	1.45	1.45	1.45	1.45	1.45	1.42
1.2	APS2	6	11	–	–	–	–	–	–	–	–	1.38	1.28	1.23	1.19	1.16	1.12	1.09	1.02	0.94	0.87	0.81
		8	12	0.89	0.89	0.87	0.81	0.76	0.71	0.66	0.62	1.45	1.45	1.45	1.44	1.31	1.20	1.10	1.02	0.94	0.87	0.81
		10	13	0.89	0.89	0.87	0.81	0.76	0.71	0.66	0.62	1.45	1.45	1.45	1.44	1.31	1.20	1.10	1.02	0.94	0.87	0.81
	APE2	10	14	1.28	1.28	1.25	1.16	1.08	1.01	0.95	0.89	1.45	1.45	1.45	1.45	1.45	1.45	1.45	1.45	1.34	1.25	1.16
		12	15	1.28	1.28	1.25	1.16	1.08	1.01	0.95	0.89	1.45	1.45	1.45	1.45	1.45	1.45	1.45	1.45	1.34	1.25	1.16

1. LOADING CLASS: Refer to Page 211 of this MANUAL for the scope of the Loading Class designations.
2. POST TYPES: Refer to Chapter 1 for details.
3. HEIGHT 'H': is the overall height of the balustrade above the substrate level shown. Interpolate for Heights between those shown.
4. DESIGN WIND SPEED: in m/s, Refer to Pages 55 to 56 for details of applicable wind codes and the methods for determining the Design Wind Speed.

'SIENA' (VRR TOP RAIL)

This specification details the members to be used, glass thicknesses required and the maximum spacing for the various posts for this style. A separate specification must be referred to for fixing to the sub-strate (refer to Chapter 3). Post spacing must not exceed the lesser of the spacing from both Chapter 2 and Chapter 3. Refer to Page 59 for notes on balustrade deflection.

1. Glass shall be GRADE A SAFETY GLASS, TOUGHENED in accordance with AS/NZS 2208, with a minimum thickness as determined from the Table below. Glass shall be supported and glazed in accordance with NZS 4223. All exposed edges to be Flat Polished.
2. Fabrication and Installation to be in accordance with Assembly Specification AS.41.12T on Page 140, the Installation Guides in Chapter 5, and all other relevant portions of the UNEX Fabricators Manual.
3. APS2 and APE2 may be used for "top fixed" and shall be used for "side fixed" situations.
4. The balustrade shall be constructed such that the geometry of the balustrade shall comply with Acceptable Solutions F4/AS1. This includes the following (but not limited to): The minimum barrier height requirement, the maximum gap allowable and the avoidance of non-complying toeholds.

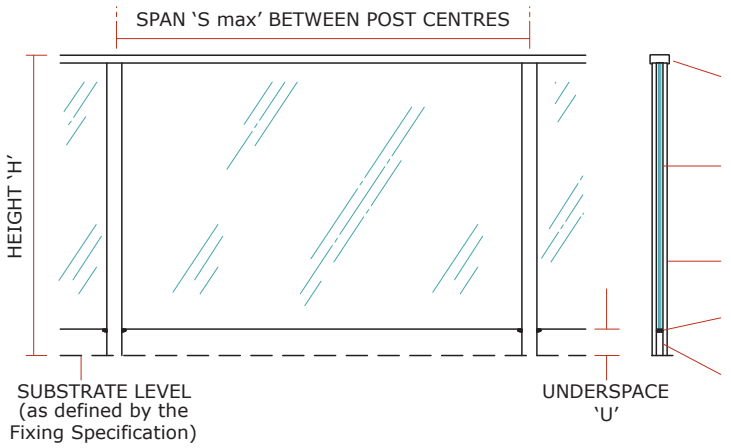

The balustrade shall be fabricated from the following items:

TOP RAIL: VRR / PZT

POSTS: APS2 or APE2 for in-line posts, APQ2 at 90º corners (see Note 3 above).

TOUGHENED GLASS PANELS. See Table Below.

BRACKET: AKS2

INSERT: AIA

MAXIMUM POST CENTRES 'S max' (metres)

ALWAYS TAKE THE LESSER OF THE VALUE BELOW AND THE VALUE FROM THE FIXING SPECIFICATION

HEIGHT(3)	POST TYPE(2)	Toughened Glass Thickness	Line No.	LOADING CLASS(1)																		
				N07C/N07R								N03R	Not Preventing Falls									
				Design Wind Speed(4)									Design Wind Speed(4)									
				VH			EH						M			H			VH		EH	
				50	52	54	56	58	60	62	64	N/A	38	40	42	44	46	48	50	52	54	56
1.0	APS2	6	1	–	–	–	–	–	–	–	–	1.48	1.28	1.23	1.19	1.16	1.12	1.09	1.06	1.04	1.01	0.99
		8	2	1.12	1.12	1.12	1.12	1.12	1.08	1.01	0.95	1.69	1.69	1.65	1.59	1.54	1.50	1.46	1.42	1.38	1.33	1.24
		10	3	1.12	1.12	1.12	1.12	1.12	1.08	1.01	0.95	1.69	1.69	1.69	1.69	1.69	1.69	1.68	1.55	1.44	1.33	1.24
	APE2	10	4	1.59	1.59	1.59	1.59	1.59	1.53	1.44	1.35	1.69	1.69	1.69	1.69	1.69	1.69	1.69	1.69	1.69	1.68	1.64
		12	5	1.59	1.59	1.59	1.59	1.59	1.53	1.44	1.35	1.69	1.69	1.69	1.69	1.69	1.69	1.69	1.69	1.69	1.69	1.69
1.1	APS2	6	6	–	–	–	–	–	–	–	–	1.43	1.28	1.23	1.19	1.16	1.12	1.09	1.06	1.04	1.01	0.99
		8	7	1.00	1.00	1.00	0.99	0.93	0.86	0.81	0.76	1.69	1.69	1.65	1.59	1.54	1.47	1.35	1.25	1.15	1.07	0.99
		10	8	1.00	1.00	1.00	0.99	0.93	0.86	0.81	0.76	1.69	1.69	1.69	1.69	1.61	1.47	1.35	1.25	1.15	1.07	0.99
	APE2	10	9	1.42	1.42	1.42	1.42	1.32	1.23	1.16	1.08	1.69	1.69	1.69	1.69	1.69	1.69	1.69	1.69	1.64	1.52	1.42
		12	10	1.42	1.42	1.42	1.42	1.32	1.23	1.16	1.08	1.69	1.69	1.69	1.69	1.69	1.69	1.69	1.69	1.64	1.52	1.42
1.2	APS2	6	11	–	–	–	–	–	–	–	–	1.38	1.28	1.23	1.19	1.16	1.12	1.09	1.02	0.94	0.87	0.81
		8	12	0.89	0.89	0.87	0.81	0.76	0.71	0.66	0.62	1.69	1.69	1.59	1.44	1.31	1.20	1.10	1.02	0.94	0.87	0.81
		10	13	0.89	0.89	0.87	0.81	0.76	0.71	0.66	0.62	1.69	1.69	1.59	1.44	1.31	1.20	1.10	1.02	0.94	0.87	0.81
	APE2	10	14	1.28	1.28	1.25	1.16	1.08	1.01	0.95	0.89	1.69	1.69	1.69	1.69	1.69	1.69	1.58	1.45	1.34	1.25	1.16
		12	15	1.28	1.28	1.25	1.16	1.08	1.01	0.95	0.89	1.69	1.69	1.69	1.69	1.69	1.69	1.58	1.45	1.34	1.25	1.16

1. LOADING CLASS: Refer to Page 211 of this MANUAL for the scope of the Loading Class designations.
2. POST TYPES: Refer to Chapter 1 for details.
3. HEIGHT 'H': is the overall height of the balustrade above the substrate level shown. Interpolate for Heights between those shown.
4. DESIGN WIND SPEED: in m/s, Refer to Pages 55 to 56 for details of applicable wind codes and the methods for determining the Design Wind Speed.

'SIENA' (VRT TOP RAIL)

This specification details the members to be used, glass thicknesses required and the maximum spacing for the various posts for this style. A separate specification must be referred to for fixing to the sub-strate (refer to Chapter 3). Post spacing must not exceed the lesser of the spacing from both Chapter 2 and Chapter 3. Refer to Page 59 for notes on balustrade deflection.

1. Glass shall be GRADE A SAFETY GLASS, TOUGHENED in accordance with AS/NZS 2208, with a minimum thickness as determined from the Table below. Glass shall be supported and glazed in accordance with NZS 4223. All exposed edges to be Flat Polished.
2. Fabrication and Installation to be in accordance with Assembly Specification AS.41.04T on Page 141, the Installation Guides in Chapter 5, and all other relevant portions of the UNEX Fabricators Manual.
3. APS2 and APE2 may be used for "top fixed" and shall be used for "side fixed" situations.
4. The balustrade shall be constructed such that the geometry of the balustrade shall comply with Acceptable Solutions F4/AS1. This includes the following (but not limited to): The minimum barrier height requirement, the maximum gap allowable and the avoidance of non-complying toeholds.

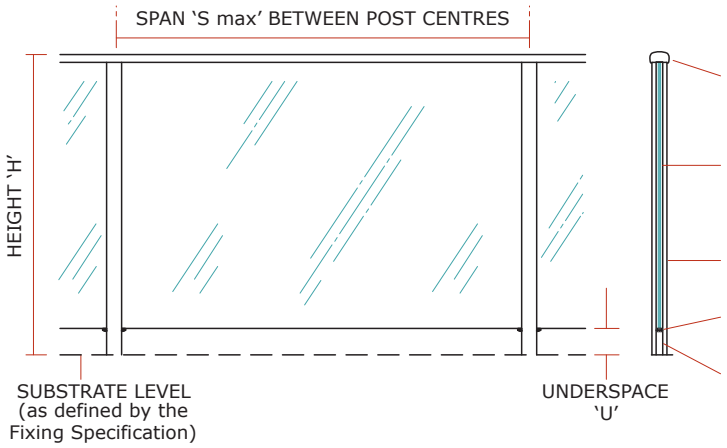

The balustrade shall be fabricated from the following items:

TOP RAIL: VRT / DZT3

POSTS: APS2 or APE2 for in-line posts, APQ2 at 90º corners (see Note 3 above).

TOUGHENED GLASS PANELS. See Table Below.

BRACKET: AKS2

INSERT: AIA

MAXIMUM POST CENTRES 'S max' (metres)

ALWAYS TAKE THE LESSER OF THE VALUE BELOW AND THE VALUE FROM THE FIXING SPECIFICATION

HEIGHT(3)	POST TYPE(2)	Toughened Glass Thickness	Line No.	LOADING CLASS(1)																		
				N07C/N07R								N03R	Not Preventing Falls									
				Design Wind Speed(4)									Design Wind Speed(4)									
				VH			EH						M			H			VH		EH	
				50	52	54	56	58	60	62	64	N/A	38	40	42	44	46	48	50	52	54	56
1.0	APS2	6		–	–	–	–	–	–	–	–	1.45	1.28	1.23	1.19	1.16	1.12	1.09	1.06	1.04	1.01	0.99
		8	2	1.12	1.12	1.12	1.12	1.12	1.08	1.01	0.95	1.45	1.45	1.45	1.45	1.45	1.45	1.45	1.42	1.38	1.33	1.24
		10	3	1.12	1.12	1.12	1.12	1.12	1.08	1.01	0.95	1.45	1.45	1.45	1.45	1.45	1.45	1.45	1.45	1.44	1.33	1.24
	APE2	10	4	1.45	1.45	1.45	1.45	1.45	1.45	1.44	1.35	1.45	1.45	1.45	1.45	1.45	1.45	1.45	1.45	1.45	1.45	1.45
		12	5	1.45	1.45	1.45	1.45	1.45	1.45	1.44	1.35	1.45	1.45	1.45	1.45	1.45	1.45	1.45	1.45	1.45	1.45	1.45
1.1	APS2	6	6	–	–	–	–	–	–	–	–	1.43	1.28	1.23	1.19	1.16	1.12	1.09	1.06	1.04	1.01	0.99
		8	7	1.00	1.00	1.00	0.99	0.93	0.86	0.81	0.76	1.45	1.45	1.45	1.45	1.45	1.45	1.35	1.25	1.15	1.07	0.99
		10	8	1.00	1.00	1.00	0.99	0.93	0.86	0.81	0.76	1.45	1.45	1.45	1.45	1.45	1.45	1.35	1.25	1.15	1.07	0.99
	APE2	10	9	1.42	1.42	1.42	1.42	1.32	1.23	1.16	1.08	1.45	1.45	1.45	1.45	1.45	1.45	1.45	1.45	1.45	1.45	1.42
		12	10	1.42	1.42	1.42	1.42	1.32	1.23	1.16	1.08	1.45	1.45	1.45	1.45	1.45	1.45	1.45	1.45	1.45	1.45	1.42
1.2	APS2	6	11	–	–	–	–	–	–	–	–	1.38	1.28	1.23	1.19	1.16	1.12	1.09	1.02	0.94	0.87	0.81
		8	12	0.89	0.89	0.87	0.81	0.76	0.71	0.66	0.62	1.45	1.45	1.45	1.44	1.31	1.20	1.10	1.02	0.94	0.87	0.81
		10	13	0.89	0.89	0.87	0.81	0.76	0.71	0.66	0.62	1.45	1.45	1.45	1.44	1.31	1.20	1.10	1.02	0.94	0.87	0.81
	APE2	10	14	1.28	1.28	1.25	1.16	1.08	1.01	0.95	0.89	1.45	1.45	1.45	1.45	1.45	1.45	1.45	1.45	1.34	1.25	1.16
		12	15	1.28	1.28	1.25	1.16	1.08	1.01	0.95	0.89	1.45	1.45	1.45	1.45	1.45	1.45	1.45	1.45	1.34	1.25	1.16

1. LOADING CLASS: Refer to Page 211 of this MANUAL for the scope of the Loading Class designations.
2. POST TYPES: Refer to Chapter 1 for details.
3. HEIGHT 'H': is the overall height of the balustrade above the substrate level shown. Interpolate for Heights between those shown.
4. DESIGN WIND SPEED: in m/s, Refer to Pages 55 to 56 for details of applicable wind codes and the methods for determining the Design Wind Speed.

CHAPTER 3 - FRAMED GLASS FIXING SPECIFICATIONS

General Notes for Fixing to Timber Substrates pg81-82
Construction Details for Top mounting to Timber Substrates pg83
Construction Details for Side mounting to Timber Substrates pg84

SPEC ID	FIXING METHOD	
FS.1T.01.00	Dry Timber, Top Fixing, 65mm CRS	pg85
FS.1T.02.00	Dry Timber, Top Fixing, 90mm CRS	pg86
FS.1S.02.01	Dry Timber, Side Fixing, Screws, 90mm Edge Joist	pg87
FS.1S.04.03	Dry Timber, Side Fixing, Screws, 90mm Edge Joist	pg88
FS.1S.06.01	Dry Timber, Side Fixing, Bolts	pg89
FS.1S.06.03	Dry Timber, Side Fixing, Bolts	pg90
FS.1S.07.01	Dry Timber, DKG2 Fixing, Screws, 90mm Edge Joist	pg91
FS.1S.07.03	Dry Timber, DKG2 Fixing, Screws, 90mm Edge Joist	pg92
FS.1S.08.01	Dry Timber, DKFB Fixing, Screws, 90mm Edge Joist	pg93
FS.2T.01.00	Wet Timber, Top Fixing, 65mm CRS	pg94
FS.2T.02.00	Wet Timber, Top Fixing, 90mm CRS	pg95
FS.2S.04.01	Wet Timber, Side Fixing, Screws, 90mm Edge Joist	pg96
FS.2S.04.03	Wet Timber, Side Fixing, Screws, 90mm Edge Joist	pg97
FS.2S.05.01	Wet Timber, Side Fixing, Screws, 135mm Edge Joist	pg98
FS.2S.05.03	Wet Timber, Side Fixing, Screws, 135mm Edge Joist	pg99
FS.2S.06.01	Wet Timber, Side Fixing, Bolts	pg100
FS.2S.06.03	Wet Timber, Side Fixing, Bolts	pg101

General Notes for Fixing to Concrete and Masonry Substrates pg102-103

FS.3T.01.00	Concrete, Top Fixing, Epoxy-Set Anchors, 65mm CRS	pg104
FS.3T.02.00	Concrete, Top Fixing, Epoxy-Set Anchors, 90mm CRS	pg105
FS.3S.19.01	Concrete, Side Fixing, Epoxy-Set Anchors	pg106
FS.3S.19.03	Concrete, Side Fixing, Epoxy-Set Anchors	pg107
FS.3S.07.01	Concrete, DKG2 Fixing, Epoxy-Set Anchors	pg108
FS.3S.07.03	Concrete, DKG2 Fixing, Epoxy-Set Anchors	pg109
FS.3T.12.01	Concrete, Post Built into	pg110
FS.3T.12.03	Concrete, Post Built into	pg111
FS.4T.01.00	Masonry Top Fixing, Epoxy-Set Anchors, 65mm CRS	pg112
FS.4T.02.00	Masonry Top Fixing, Epoxy-Set Anchors, 90mm CRS	pg113
FS.4S.19.01	Masonry, Side Fixing, Epoxy-Set Anchors	pg114
FS.4S.19.03	Masonry, Side Fixing, Epoxy-Set Anchors	pg115
FS.5T.0-	Steel, Top Fixing, Inline Bolts	pg116
FS.5T.0-	Steel, Top Fixing, Inline Bolts	pg117
FS.5T.0-	Steel, Top Fixing, Bolts, 65mm CRS	pg118
FS.5T.01.00	Steel, Side Fixing, Bolts	pg119
FS.5S.06.01	Steel, Side Fixing, Bolts	pg120

GENERAL NOTES FOR FIXING TO TIMBER SUBSTRATES

The following notes refer to construction details on Pages 94-95 and 103-104 for Top Fixing post bases and construction details on Pages 96-102 and 105-110 for Side Fixing posts to timber structures.

1. GENERAL

Tables in Section 4 give the maximum post spacings permitted by the strength of the base plate to substrate connection for Top Fixed posts, or the strength of the post to substrate connection for Side Fixed posts.

Section 3 gives the maximum post spacing permitted governed by the strength of the posts and rails.

The maximum post spacing permitted is the LESSER of the spacings tabulated in Section 3 and Section 4.

For baluster styles, use the post spacings for the lowest wind speed in the appropriate loading class.

2. LOADING CLASS

Refer to Page 211 for a description of the various Loading Class designations.

3. APPROVED FASTENERS

All fasteners shall be manufactured from 316 stainless steel and be supplied by UNEX.

Coach screws shall be manufactured to DIN 571 and are identified in the tables by their part number. e.g. FC8-165 : FC = Coach screw stainless steel ; 8 = 8mm diameter ; 165 = length in mm.

Bolts shall be 8mm diameter Class 70 stainless steel and be fitted with stainless steel nylock nuts and washers. Alternatively use 316 S/S threaded rods with nuts and washers. Use S/S dome nuts in lieu of standard nut heads where visible.

If using bolts, the bolt length required can be calculated using the following allowances: -

- FB8 bolts (top mounted) - allow 30mm total for an FN8N nylock nut, 2 off FW8-22 washers, FWP8-22G polymer washer, FW10-50SQ washer, and 12mm thick baseplate.
- FB8 bolts (Side mounted) - allow 69mm total for an FN8N nylock nut, 2 off FW8-22 washers, FWP8-22G polymer washer, FW10-50SQ washer, SG42-12 neoprene gasket, and 50mm thick post.

Add to this allowance the thickness of any topping (eg. plaster, tiles, bedding, etc) or fascias and packers, plus the thickness of the timber being bolted through as shown in the relevant fixing specification, to get the minimum total bolt length required.

4. HEIGHT

Height 'H' is the overall height of the balustrade above the substrate level shown. Interpolate for heights between those shown.

5. DESIGN WIND SPEED

Design Wind Speeds are ultimate limit state wind speeds and may be determined from Pages 63-64. M, H, VH, and EH indicate Wind Zones from NZS 3604:2011. Interpolate between wind speeds shown.

6. BASEPLATES

Baseplates shall be attached to the posts as per Pages 182 and 183 and fixed to structural timber framing as illustrated.

(continued on following Page)

GENERAL NOTES FOR FIXING TO TIMBER SUBSTRATES - (CONT'D)

7. FABRICATION AND INSTALLATION

Fabrication and Installation are to be in accordance with the other Sections of this Manual and where applicable, comply with the relevant requirements of the NZ Building Code.

8. SUBSTRATE DESIGN

Substrate Design including waterproofing and structural design of the timber members and their connections is beyond the scope of these specifications and must be carried out by others. Structural timber shall have a minimum thickness of 45mm.

9. TIMBER

Screw strength is based on structural timber being Pinus Radiata VSG8 or MSG8.

DRY TIMBER is timber with a maximum in-service moisture content of 18%.

WET TIMBER is timber where the in-service moisture content could be greater than 18% eg.- exposed decks.

10. INSERTING COACH SCREWS

For 8mm and 10mm coach screws, predrill the entire screw embedment to the following diameters.

5.5mm diameter for 8mm coach screws. (TDT5.5 Drill bits available from UNEX).

8mm diameter for 10mm coach screws. (TDT8.0 Drill bits available from UNEX).

Where the unthreaded shaft of the screw will penetrate the structural timber, it will also be necessary to predrill the depth of the hole that will be occupied by the unthreaded shank to the nominal shank diameter taking great care not to extend this drilling into the threaded portion.

In some situations, the screws may penetrate beyond the structural timber. Check for suitability.

11. DURABILITY

Instructions relating to durability issues outlined on Pages 176-177 of this manual must be carried out in conjunction with these Fixing Specifications. These instructions cover a number of areas including; post drainage slots and separation of the aluminium from the stainless steel fasteners and/or the substrate. Detailed instructions are given throughout this manual, particularly in Chapter 5.

12. PACKING CAVITIES

For side fixed posts the full area between the post or support bracket and the supporting substrate must be packed solid with No 1 Pinus Radiata or material having an equivalent bearing strength.

13. DEFLECTION

Please note that some of the following fixing specifications may exceed the non-mandatory recommended balustrade deflection guide.

14. SUBSTRATE FASTENER BONDING

Where required all substrate coach screws, must have fully engaged threads to the structural timber and be embedded with **"Sika Supergrip 2 Hour"** Adhesive. The adhesive is available from UNEX code: #TASG and must not be substituted with other adhesives. Insert some adhesive into the pre-drilled hole and liberally apply to the coach screws before insertion. Ensure you always follow all the manufactures safety procedures and usage instructions.

CONSTRUCTION DETAILS FOR TOP MOUNTING TO TIMBER SUBSTRATES

NOTES:

1. Timer decks must be nogged at framing stage to suit post fixing requirements.
2. Where post spacing is known at framing stage, mark post centres on edge joists and add additional nogs as shown.
3. Where posts spacing is not known at framing stage, provide extra continuous nog right around the deck.
4. Edge joists and nogs to be at 90 mm centres.
5. Structural fixing details of nogs, joists, end joists and dummy joists to be determined by deck design engineer.

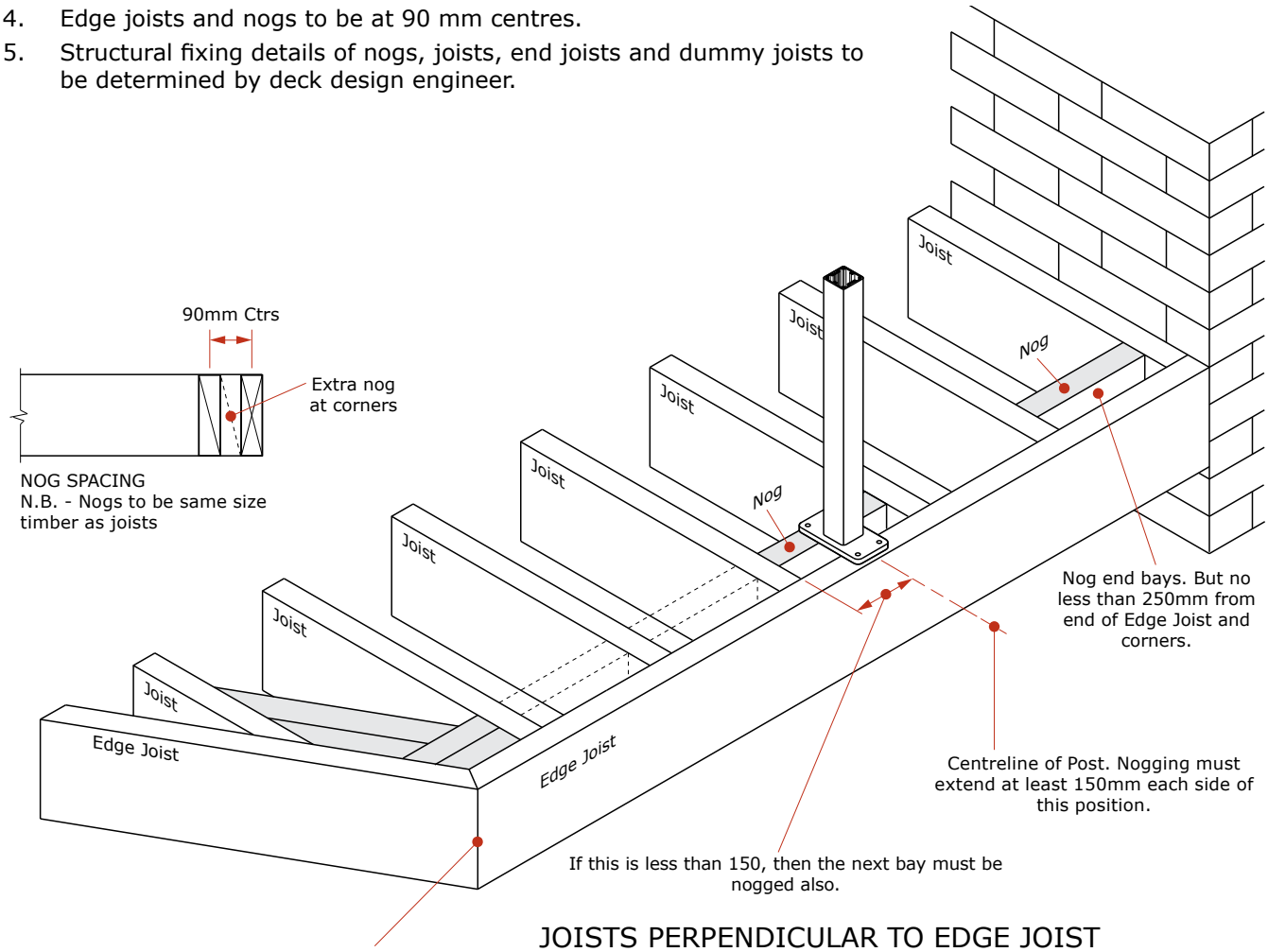

JOISTS PERPENDICULAR TO EDGE JOIST

For non-90º corners, solid nog each way parallel to edge joists as shown above:
For 90º corners, solid nog as shown below:

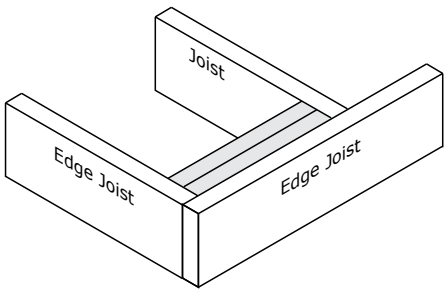

NOGS FOR 90º CORNER

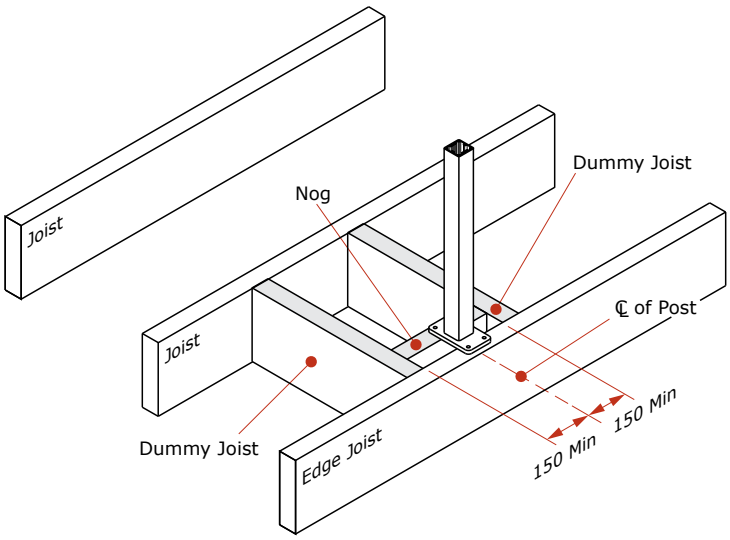

JOISTS PARALLEL TO EDGE JOIST

CONSTRUCTION DETAILS FOR SIDE MOUNTING TO TIMBER SUBSTRATES

NOTES:

1. Timber decks must be nogged at framing stage for the post fixing requirements.
2. Provide an extra continuous Edge Joist right around the deck edge as shown.
3. Where edge joists are parallel to the main joists, provide dummy joists at 400 centres maximum as shown.
4. Structural fixing details of nogs, joists, end joists and dummy joists to be determined by deck design engineer.
5. All edge joists and nogs to be treated H3.

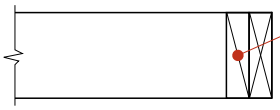

NOG POSITION
N.B. - Nogs to be same size timber as joists

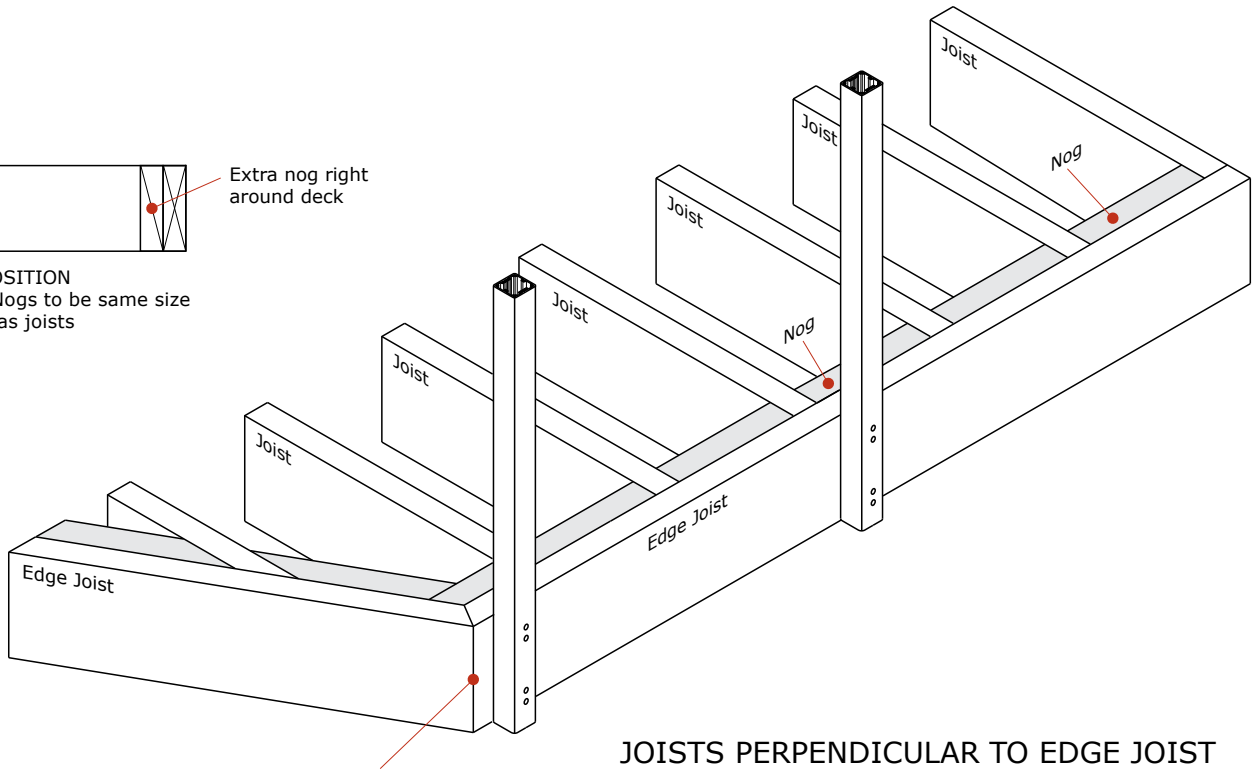

JOISTS PERPENDICULAR TO EDGE JOIST

For non-90º corners, solid nog each way parallel to edge joists as shown above:
For 90º corners, solid nog as shown below:

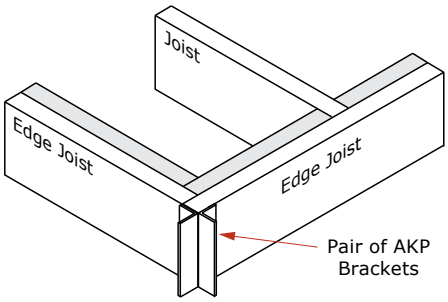

NOGS FOR 90º CORNER

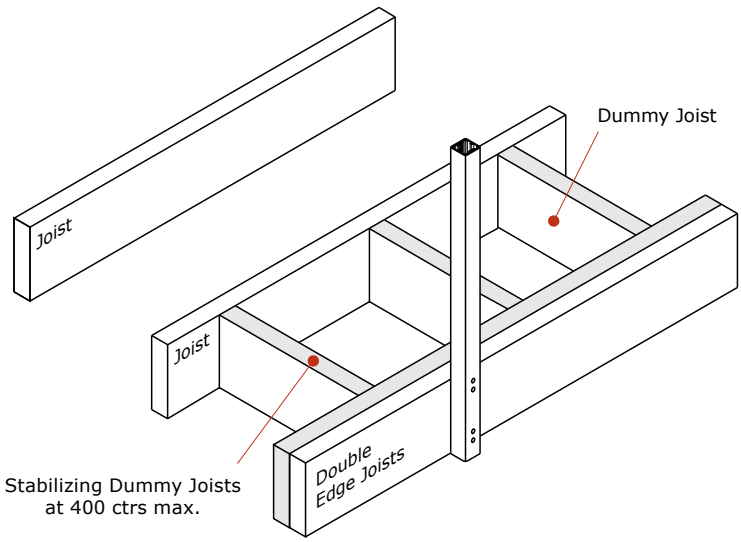

JOISTS PARALLEL TO EDGE JOIST

DRY TIMBER - TOP FIXING, 65MM CRS

Refer to all notes on Pages 81 and 82 which shall apply to this specification and the relevant pages in Chapter 5 Installation Guides. Refer also to Chapter 2 for the Style Specification.

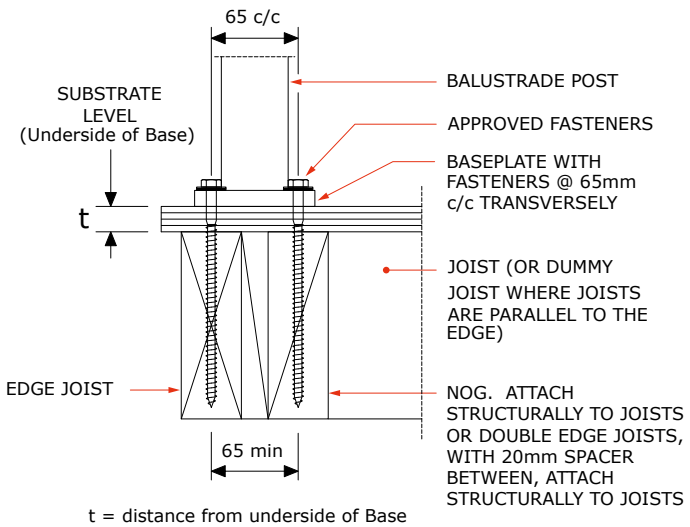

t = distance from underside of Base Plate to top of structural timber

1. For details of approved fasteners refer to Note 3 on Page 81.
2. Washers to be fitted under screw and bolt heads shall be as follows
   - For 6mm fasteners - washer supplied with fasteners.
   - For FC8-165 fasteners - washer supplied with fasteners.
   - For 8mm bolts - 22mm O.D. S/S washer (Part No. FW8-22) with a polymer washer (Part No. FWP8-22G) between the S/S and the aluminium.
   - For Washers bearing against timber use 50 x 50 x 3mm stainless steel washers Part No FW10-50SQ.
3. Substrate design including waterproofing and the structural design of the timber substrate and its connections are not included in this specification and must be carried out by others.

MAXIMUM POST CENTRES 'S max' (metres)

ALWAYS TAKE THE LESSER OF THE VALUE BELOW AND THE VALUE FROM THE STYLE SPECIFICATION

Height[3]	Baseplate Size D x W	Fasteners - Qty and Type[2]	t' (See diagram)	Line No.	LOADING CLASS[1]																		
					N07C/N07R								N03R	Not Preventing Falls									
					Design Wind Speed[4]									Design Wind Speed[4]									
					VH			EH						M			H			VH			EH
					50	52	54	56	58	60	62	64		38	40	42	44	46	48	50	52	54	56
1.0	90x115	4 x FC8-165	19	1	1.32	1.32	1.32	1.29	1.20	1.12	1.05	0.99	2.83	2.80	2.53	2.29	2.09	1.91	1.76	1.62	1.50	1.39	1.29
	90x115	4 x FC8-165	25	2	1.25	1.25	1.25	1.22	1.14	1.06	0.99	0.93	2.68	2.65	2.39	2.17	1.97	1.81	1.66	1.53	1.41	1.31	1.22
	90x115	4 x FC8-165	32	3	1.18	1.18	1.18	1.14	1.06	0.99	0.93	0.87	2.52	2.47	2.23	2.02	1.84	1.68	1.55	1.43	1.32	1.22	1.14
	90x115	4 x M8 Bolts	N/A	4	1.73	1.73	1.73	1.67	1.56	1.46	1.37	1.28	2.98	2.98	2.98	2.97	2.71	2.48	2.28	2.10	1.94	1.80	1.67
1.1	90x115	4 x FC8-165	19	5	1.20	1.20	1.15	1.07	1.00	0.93	0.87	0.82	2.57	2.32	2.10	1.90	1.73	1.59	1.46	1.34	1.24	1.15	1.07
	90x115	4 x FC8-165	25	6	1.14	1.14	1.09	1.01	0.94	0.88	0.83	0.77	2.45	2.20	1.98	1.80	1.64	1.50	1.38	1.27	1.17	1.09	1.01
	90x115	4 x FC8-165	32	7	1.07	1.07	1.02	0.94	0.88	0.82	0.77	0.72	2.30	2.05	1.85	1.68	1.53	1.40	1.29	1.18	1.10	1.02	0.94
	90x115	4 x M8 Bolts	N/A	8	1.58	1.58	1.50	1.39	1.30	1.21	1.13	1.06	2.98	2.98	2.73	2.47	2.25	2.06	1.89	1.74	1.61	1.50	1.39
1.2	90x115	4 x FC8-165	19	9	1.10	1.05	0.97	0.90	0.84	0.79	0.74	0.69	2.36	1.96	1.77	1.60	1.46	1.34	1.23	1.13	1.05	0.97	0.90
	90x115	4 x FC8-165	25	10	1.05	0.99	0.92	0.85	0.80	0.74	0.70	0.65	2.25	1.85	1.67	1.52	1.38	1.26	1.16	1.07	0.99	0.92	0.85
	90x115	4 x FC8-165	32	11	0.99	0.92	0.86	0.80	0.74	0.69	0.65	0.61	2.11	1.73	1.56	1.42	1.29	1.18	1.09	1.00	0.92	0.86	0.80
	90x115	4 x M8 Bolts	N/A	12	1.45	1.36	1.26	1.17	1.09	1.02	0.96	0.90	2.98	2.55	2.30	2.09	1.90	1.74	1.60	1.47	1.36	1.26	1.17

1. LOADING CLASS: Refer to Page 211 of this Manual for the scope of the Loading Class designations.
2. FASTENER DESIGNATIONS: beginning with 'F' are part numbers for fasteners supplied by UNEX eg. FC8-165: FC = Coach Screw Stainless Steel. 8 = 8mm diameter, 165 = length in mm; Substitution with other fasteners is not permitted.
3. HEIGHT 'H': is the overall height of the balustrade above the substrate level shown. Interpolate for Heights between those shown.
4. DESIGN WIND SPEED: in m/s, Refer to Pages 63 to 64 for details of applicable wind codes and the methods for determining the Design Wind Speed.

DRY TIMBER - TOP FIXING, 90MM CRS

Refer to all notes on Pages 81 and 82 which shall apply to this specification and the relevant pages in Chapter 5 Installation Guides. Refer also to Chapter 2 for the Style Specification.

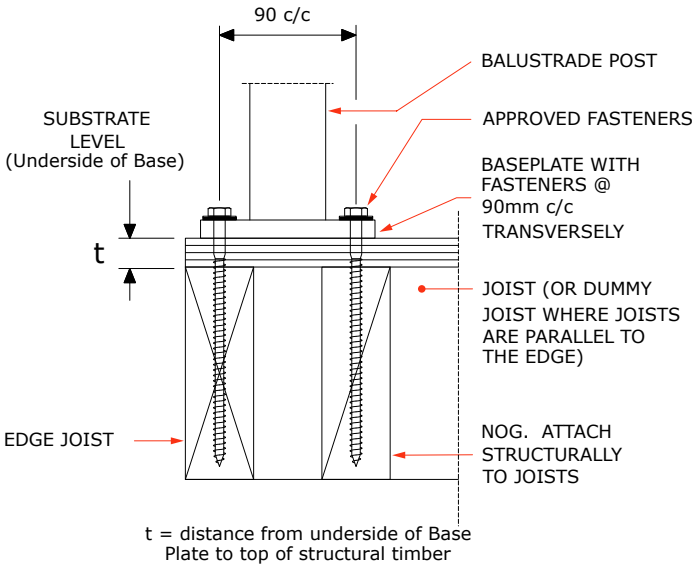

1. For details of approved fasteners refer to Note 3 on Page 81.
2. Washers to be fitted under screw and bolt heads shall be as follows
   - For 6mm fasteners - washer supplied with fasteners.
   - For FC8-165 fasteners - washer supplied with fasteners.
   - For 8mm bolts - 22mm O.D. S/S washer (Part No. FW8-22) with a polymer washer (Part No. FWP8-22G) between the S/S and the aluminium.
   - For Washers bearing against timber use 50 x 50 x 3mm stainless steel washers Part No FW10-50SQ.
3. Substrate design including waterproofing and the structural design of the timber substrate and its connections are not included in this specification and must be carried out by others.

MAXIMUM POST CENTRES 'S max' (metres)

ALWAYS TAKE THE LESSER OF THE VALUE BELOW AND THE VALUE FROM THE STYLE SPECIFICATION

Height[3]	Baseplate Size D x W	Fasteners - Qty and Type[2]	t' (See dia-gram)	Line No.	LOADING CLASS[1]																			
					N07C/N07R								N03R	Not Preventing Falls										
					Design Wind Speed[4]									Design Wind Speed[4]										
					VH		EH							M			H			VH			EH	
					50	52	54	56	58	60	62	64		38	40	42	44	46	48	50	52	54	56
1.0	115x105	4 x FC8-165	19	1	1.72	1.72	1.72	1.68	1.57	1.46	1.37	1.29	3.68	3.65	3.29	2.99	2.72	2.49	2.29	2.11	1.95	1.81	1.68
	115x105	4 x FC8-165	25	2	1.63	1.63	1.63	1.58	1.47	1.38	1.29	1.21	3.48	3.43	3.10	2.81	2.56	2.34	2.15	1.98	1.83	1.70	1.58
	115x105	4 x FC8-165	32	3	1.52	1.52	1.52	1.47	1.37	1.28	1.20	1.13	3.26	3.19	2.88	2.61	2.38	2.18	2.00	1.84	1.70	1.58	1.47
	115x105	4 x M8 Bolts	N/A	4	2.40	2.40	2.40	2.32	2.16	2.02	1.89	1.77	4.62	4.62	4.54	4.12	3.75	3.43	3.15	2.91	2.69	2.49	2.32
1.1	115x105	4 x FC8-165	19	5	1.56	1.56	1.50	1.39	1.30	1.21	1.14	1.07	3.35	3.03	2.73	2.48	2.26	2.06	1.90	1.75	1.62	1.50	1.39
	115x105	4 x FC8-165	25	6	1.48	1.48	1.41	1.31	1.22	1.14	1.07	1.01	3.17	2.85	2.57	2.33	2.13	1.95	1.79	1.65	1.52	1.41	1.31
	115x105	4 x FC8-165	32	7	1.39	1.39	1.31	1.22	1.14	1.06	1.00	0.94	2.97	2.65	2.39	2.17	1.98	1.81	1.66	1.53	1.42	1.31	1.22
	115x105	4 x M8 Bolts	N/A	8	2.19	2.19	2.07	1.93	1.79	1.68	1.57	1.47	4.62	4.18	3.77	3.42	3.12	2.85	2.62	2.41	2.23	2.07	1.93
1.2	115x105	4 x FC8-165	19	9	1.44	1.36	1.26	1.17	1.09	1.02	0.96	0.90	3.08	2.55	2.30	2.09	1.90	1.74	1.60	1.47	1.36	1.26	1.17
	115x105	4 x FC8-165	25	10	1.36	1.28	1.19	1.11	1.03	0.96	0.90	0.85	2.92	2.40	2.17	1.97	1.79	1.64	1.51	1.39	1.28	1.19	1.11
	115x105	4 x FC8-165	32	11	1.27	1.20	1.11	1.03	0.96	0.90	0.84	0.79	2.73	2.24	2.02	1.83	1.67	1.53	1.40	1.29	1.20	1.11	1.03
	115x105	4 x M8 Bolts	N/A	12	2.01	1.88	1.75	1.63	1.52	1.42	1.33	1.24	4.30	3.53	3.19	2.89	2.63	2.41	2.21	2.04	1.88	1.75	1.63

1. LOADING CLASS: Refer to Page 211 of this Manual for the scope of the Loading Class designations.
2. FASTENER DESIGNATIONS: beginning with 'F' are part numbers for fasteners supplied by UNEX eg. FC8-165: FC = Coach Screw Stainless Steel. 8 = 8mm diameter, 165 = length in mm; Substitution with other fasteners is not permitted.
3. HEIGHT 'H': is the overall height of the balustrade above the substrate level shown. Interpolate for Heights between those shown.
4. DESIGN WIND SPEED: in m/s, Refer to Pages 63 to 64 for details of applicable wind codes and the methods for determining the Design Wind Speed.

DRY TIMBER - SIDE FIXING, SCREWS, 90MM EDGE JOIST

Refer to all notes on Pages 81 and 82 which shall apply to this specification and the relevant pages in Chapter 5 Installation Guides. Refer also to Chapter 2 for the Style Specification.

VPM2, VPH2 & VPE POST TYPES ONLY

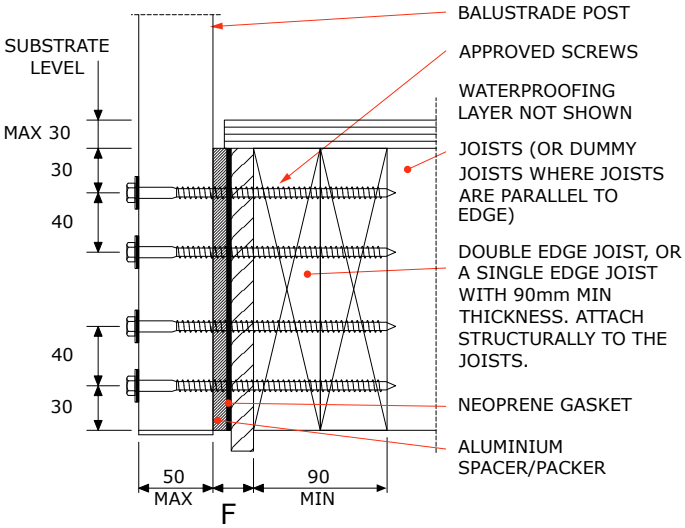

Note: VIH Stiffener required for VPH2, VPE Posts.
No stiffener required for VPM2 Post.
See page 146 for details.

1. For details of approved fasteners refer to Note 3 on Page 81.
2. The post spacings shown are based on the fixing screws having Fully Developed Thread - FDT (i.e. excluding the unthreaded shank) engaging with the full width of the timber joist. This will exist if the dimension 'F' on the diagram is within the limits shown in the Table. Where this does not occur, the post spacing must be reduced, by the proportion of FDT engagement to 90mm. Check suitability of screw protrusion on the inside where this may occur. Sizes of Pass holes in the posts shall not exceed screw diameter plus 1mm.
3. Washers to be fitted under screw and bolt heads shall be as follows
   - For 8mm fasteners - washer supplied with fasteners.
4. Substrate design including waterproofing and the structural design of the timber substrate and its connections are not included in this specification and must be carried out by others.

MAXIMUM POST CENTRES 'S max' (metres)

ALWAYS TAKE THE LESSER OF THE VALUE BELOW AND THE VALUE FROM THE STYLE SPECIFICATION

Height[3]	Post Type	Joist Size	Fasteners - Qty and Type[2]	'F' (See diagram)	Line No.	LOADING CLASS[1]																			
						N07C/N07R								N03R	Not Preventing Falls										
						Design Wind Speed[4]									Design Wind Speed[4]										
						VH			EH						M			H			VH			EH	
						50	52	54	56	58	60	62	64	1	38	40	42	44	46	48	50	52	54	56
1.0	VPM2	140	3 x FC8-165	0-20	1	-	-	-	-	-	-	-	-	-	1.41	1.27	1.15	1.05	0.96	0.88	0.81	0.75	0.70	0.65
	VPM2	190+	4 x FC8-165	0-20	2	1.28	1.28	1.19	1.10	1.03	0.96	0.90	0.84	2.75	2.40	2.16	1.96	1.79	1.63	1.50	1.38	1.28	1.19	1.10
	VPH2 VPE	140	3 x FC8-165	0-20	3	-	-	-	-	-	-	-	-	-	1.41	1.27	1.15	1.05	0.96	0.88	0.81	0.75	0.70	0.65
	VPH2	190+	4 x FC8-165	0-20	4	1.28	1.28	1.19	1.10	1.03	0.96	0.90	0.84	2.75	2.40	2.16	1.96	1.79	1.63	1.50	1.38	1.28	1.19	1.10
	VPE	190+	4 x FC8-165	0-20	5	1.28	1.28	1.19	1.10	1.03	0.96	0.90	0.84	2.75	2.40	2.16	1.96	1.79	1.63	1.50	1.38	1.28	1.19	1.10
1.1	VPM2	140	3 x FC8-165	0-20	6	-	-	-	-	-	-	-	-	-	1.19	1.07	0.97	0.89	0.81	0.74	0.69	0.63	0.59	0.55
	VPM2	190+	4 x FC8-165	0-20	7	-	-	-	-	-	-	-	-	-	2.03	1.83	1.66	1.51	1.39	1.27	1.17	1.08	1.01	0.94
	VPH2 VPE	140	3 x FC8-165	0-20	8	-	-	-	-	-	-	-	-	-	1.19	1.07	0.97	0.89	0.81	0.74	0.69	0.63	0.59	0.55
	VPH2	190+	4 x FC8-165	0-20	9	1.17	1.08	1.01	0.94	0.87	0.81	0.76	0.72	2.54	2.03	1.83	1.66	1.51	1.39	1.27	1.17	1.08	1.01	0.94
	VPE	190+	4 x FC8-165	0-20	10	1.17	1.08	1.01	0.94	0.87	0.81	0.76	0.72	2.54	2.03	1.83	1.66	1.51	1.39	1.27	1.17	1.08	1.01	0.94
1.2	VPM2	140	3 x FC8-165	0-20	11	-	-	-	-	-	-	-	-	-	1.02	0.92	0.83	0.76	0.69	0.64	0.59	0.54	0.50	0.47
	VPM2	190+	4 x FC8-165	0-20	12	-	-	-	-	-	-	-	-	-	1.74	1.57	1.43	1.30	1.19	1.09	1.01	0.93	0.86	0.80
	VPH2 VPE	140	3 x FC8-165	0-20	13	-	-	-	-	-	-	-	-	-	1.02	0.92	0.83	0.76	0.69	0.64	0.59	0.54	0.50	0.47
	VPH2	190+	4 x FC8-165	0-20	14	1.01	0.93	0.86	0.80	0.75	0.70	0.66	0.61	2.36	1.74	1.57	1.43	1.30	1.19	1.09	1.01	0.93	0.86	0.80
	VPE	190+	4 x FC8-165	0-20	15	1.01	0.93	0.86	0.80	0.75	0.70	0.66	0.61	2.36	1.74	1.57	1.43	1.30	1.19	1.09	1.01	0.93	0.86	0.80

1. LOADING CLASS: Refer to Page 211 of this Manual for the scope of the Loading Class designations.
2. FASTENER DESIGNATIONS: beginning with 'F' are part numbers for fasteners supplied by UNEX eg. FC8-165: FC = Coach Screw Stainless Steel. 8 = 8mm diameter, 165 = length in mm; Substitution with other fasteners is not permitted.
3. HEIGHT 'H': is the overall height of the balustrade above the substrate level shown. Interpolate for Heights between those shown.
4. DESIGN WIND SPEED: in m/s, Refer to Pages 63 to 64 for details of applicable wind codes and the methods for determining the Design Wind Speed.

DRY TIMBER - SIDE FIXING, SCREWS, 90MM EDGE JOIST

Refer to all notes on Pages 81 and 82 which shall apply to this specification and the relevant pages in Chapter 5 Installation Guides. Refer also to Chapter 2 for the Style Specification.

APS2 & APE2 POST TYPES ONLY

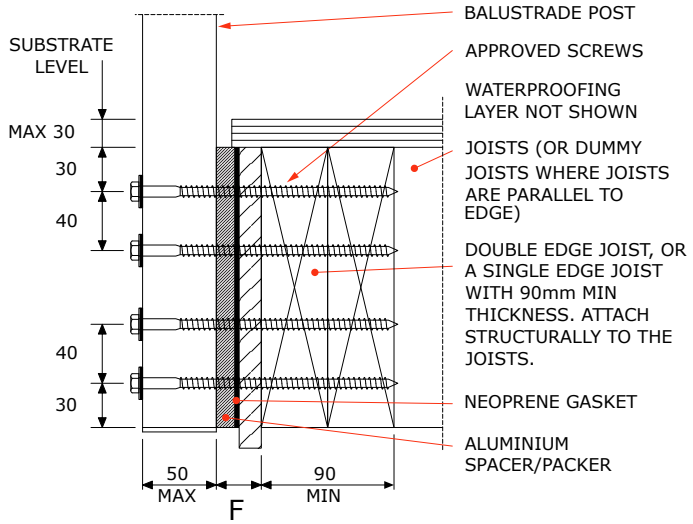

1. For details of approved fasteners refer to Note 3 on Page 81.
2. The post spacings shown are based on the fixing screws having Fully Developed Thread - FDT (i.e. excluding the unthreaded shank) engaging with the full width of the timber joist. This will exist if the dimension 'F' on the diagram is within the limits shown in the Table. Where this does not occur, the post spacing must be reduced, by the proportion of FDT engagement to 90mm. Check suitability of screw protrusion on the inside where this may occur. Sizes of Pass holes in the posts shall not exceed screw diameter plus 1mm.
3. Washers to be fitted under screw and bolt heads shall be as follows
   - For 8mm fasteners - washer supplied with fasteners.
4. Substrate design including waterproofing and the structural design of the timber substrate and its connections are not included in this specification and must be carried out by others.

MAXIMUM POST CENTRES 'S max' (metres)

ALWAYS TAKE THE LESSER OF THE VALUE BELOW AND THE VALUE FROM THE STYLE SPECIFICATION

Height[3]	Post Type	Joist Size	Fasteners - Qty and Type[2]	'F' (See diagram)	Line No.	LOADING CLASS[1]																			
						N07C/N07R								N03R	Not Preventing Falls										
						Design Wind Speed[4]									Design Wind Speed[4]										
						VH		EH							M			H			VH			EH	
						50	52	54	56	58	60	62	64	N/A	38	40	42	44	46	48	50	52	54	56
1.0	APS2	140	3 x FC8-165	0-20	1	-	-	-	-	-	-	-	-	-	1.41	1.27	1.15	1.05	0.96	0.88	0.81	0.75	0.70	0.65
	APS2	190+	4 x FC8-165	0-20	2	1.28	1.28	1.19	1.10	1.03	0.96	0.90	0.84	2.75	2.40	2.16	1.96	1.79	1.63	1.50	1.38	1.28	1.19	1.10
	APE2	140	3 x FC8-165	0-20	3	-	-	-	-	-	-	-	-	-	1.41	1.27	1.15	1.05	0.96	0.88	0.81	0.75	0.70	0.65
	APE2	190	4 x FC8-165	0-20	4	1.28	1.28	1.19	1.10	1.03	0.96	0.90	0.84	2.75	2.40	2.16	1.96	1.79	1.63	1.50	1.38	1.28	1.19	1.10
	APE2	240+	4 x FC8-165	0-20	5	1.79	1.74	1.61	1.50	1.39	1.30	1.22	1.15	3.84	3.25	2.93	2.66	2.42	2.22	2.04	1.88	1.74	1.61	1.50
1.1	APS2	140	3 x FC8-165	0-20	6	-	-	-	-	-	-	-	-	-	1.19	1.07	0.97	0.89	0.81	0.74	0.69	0.63	0.59	0.55
	APS2	190+	4 x FC8-165	0-20	7	1.17	1.08	1.01	0.94	0.87	0.81	0.76	0.72	2.54	2.03	1.83	1.66	1.51	1.39	1.27	1.17	1.08	1.01	0.94
	APE2	140	3 x FC8-165	0-20	8	-	-	-	-	-	-	-	-	-	1.19	1.07	0.97	0.89	0.81	0.74	0.69	0.63	0.59	0.55
	APE2	190	4 x FC8-165	0-20	9	1.17	1.08	1.01	0.94	0.87	0.81	0.76	0.72	2.54	2.03	1.83	1.66	1.51	1.39	1.27	1.17	1.08	1.01	0.94
	APE2	240+	4 x FC8-165	0-20	10	1.60	1.48	1.37	1.27	1.19	1.11	1.04	0.98	3.55	2.77	2.50	2.26	2.06	1.89	1.73	1.60	1.48	1.37	1.27
1.2	APS2	140	3 x FC8-165	0-20	11	-	-	-	-	-	-	-	-	-	1.02	0.92	0.83	0.76	0.69	0.64	0.59	0.54	0.50	0.47
	APS2	190+	4 x FC8-165	0-20	12	1.01	0.93	0.86	0.80	0.75	0.70	0.66	0.61	2.36	1.74	1.57	1.43	1.30	1.19	1.09	1.01	0.93	0.86	0.80
	APE2	140	3 x FC8-165	0-20	13	-	-	-	-	-	-	-	-	-	1.02	0.92	0.83	0.76	0.69	0.64	0.59	0.54	0.50	0.47
	APE2	190	4 x FC8-165	0-20	14	1.01	0.93	0.86	0.80	0.75	0.70	0.66	0.61	2.36	1.74	1.57	1.43	1.30	1.19	1.09	1.01	0.93	0.86	0.80
	APE2	240+	4 x FC8-165	0-20	15	1.38	1.27	1.18	1.10	1.02	0.96	0.90	0.84	3.31	2.39	2.15	1.95	1.78	1.63	1.49	1.38	1.27	1.18	1.10

1. LOADING CLASS: Refer to Page 211 of this Manual for the scope of the Loading Class designations.
2. FASTENER DESIGNATIONS: beginning with 'F' are part numbers for fasteners supplied by UNEX eg. FC8-165: FC = Coach Screw Stainless Steel. 8 = 8mm diameter, 165 = length in mm; Substitution with other fasteners is not permitted.
3. HEIGHT 'H': is the overall height of the balustrade above the substrate level shown. Interpolate for Heights between those shown.
4. DESIGN WIND SPEED: in m/s, Refer to Pages 63 to 64 for details of applicable wind codes and the methods for determining the Design Wind Speed.

DRY TIMBER - SIDE FIXING, BOLTS

Refer to all notes on Pages 81 and 82 which shall apply to this specification and the relevant pages in Chapter 5 Installation Guides. Refer also to Chapter 2 for the Style Specification.

VPM2, VPH2 & VPE POST TYPES ONLY

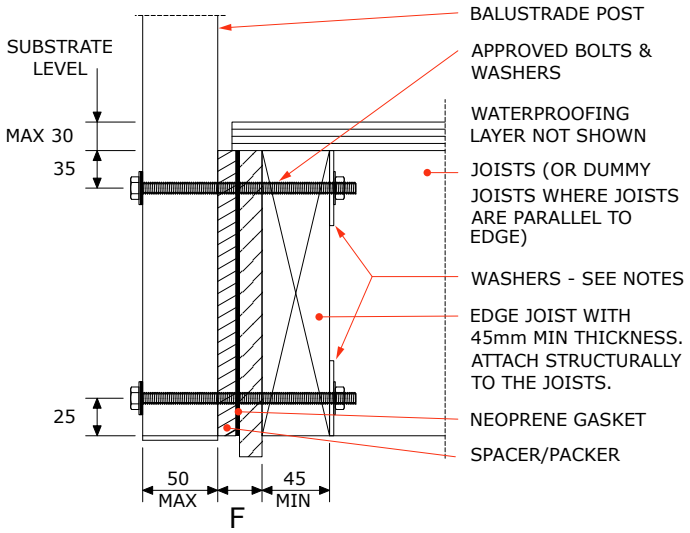

Note: VIH Stiffener required for VPH2, VPE Posts.
No stiffener required for VPM2 Post.
See page 146 for details.

1. For details of approved fasteners refer to Note 3 on Page 81.
2. Washers to be fitted under screw and bolt heads shall be as follows
   - For 8mm bolts - 22mm O.D. S/S washer (Part No. FW8-22) with a polymer washer (Part No. FWP8-22G) between the S/S and the aluminium.
   - For washers bearing against timber use 50 x 50 x 3mm stainless steel washers (Part No. FW10-50SQ).
3. Substrate design including waterproofing, the structural design of the timber members and their connections, is beyond the scope of this specification and must be carried out by others.
4. Spacings in Table below are based on Dry timber, using Pinus Radiata with a maximum in-service moisture content of 18%. For Wet timber, where the in-service moisture contents will exceed 18%, refer to specification FS.2S.06.01 pn Page 106.
5. Substrate design including waterproofing and the structural design of the timber substrate and its connections are not included in this specification and must be carried out by others.

MAXIMUM POST CENTRES 'S max' (metres)

ALWAYS TAKE THE LESSER OF THE VALUE BELOW AND THE VALUE FROM THE STYLE SPECIFICATION

Height[3]	Post Type	Joist Size	Fasteners - Qty and Type[2]	Line No.	LOADING CLASS[1]																	
					N07C/N07R								N03R	Not Preventing Falls								
					Design Wind Speed[4]									Design Wind Speed[4]								
					VH		EH							M			H			VH		EH
					50	52	54	56	58	60	62	64	1	38	40	42	44	46	48	50	52	54	56
1.0	VPM2	140+	2 x M8 Bolts	1	1.06	1.06	1.06	1.06	1.04	0.98	0.91	0.85	1.84	1.89	1.89	1.89	1.81	1.66	1.53	1.40	1.30	1.20	1.11
	VPH2 VPE	140	2 x M8 Bolts	2	1.29	1.29	1.29	1.20	1.11	1.04	0.99	0.99	1.84	2.16	2.16	2.13	1.94	1.77	1.63	1.50	1.39	1.29	1.20
	VPH2	190+	2 x M8 Bolts	3	1.34	1.34	1.34	1.34	1.33	1.24	1.15	1.09	2.85	2.38	2.38	2.38	2.29	2.10	1.93	1.78	1.64	1.53	1.41
	VPE	190+	2 x M8 Bolts	4	1.68	1.68	1.68	1.68	1.60	1.50	1.40	1.31	2.92	2.98	2.98	2.98	2.79	2.55	2.35	2.16	2.00	1.85	1.73
1.1	VPM2	140+	2 x M8 Bolts	5	-	-	-	-	-	-	-	-	-	1.58	1.58	1.58	1.51	1.39	1.28	1.18	1.09	1.00	0.94
	VPH2 VPE	140	2 x M8 Bolts	6	1.19	1.16	1.08	1.00	0.99	0.95	0.89	0.83	1.71	1.83	1.83	1.78	1.63	1.49	1.37	1.26	1.16	1.08	1.00
	VPH2	190+	2 x M8 Bolts	7	1.21	1.21	1.21	1.19	1.10	1.03	0.96	0.90	2.61	1.98	1.98	1.98	1.91	1.75	1.61	1.49	1.38	1.28	1.19
	VPE	190+	2 x M8 Bolts	8	1.53	1.53	1.53	1.44	1.34	1.25	1.18	1.10	2.68	2.49	2.49	2.49	2.33	2.13	1.95	1.80	1.66	1.55	1.44
1.2	VPM2	140+	2 x M8 Bolts	9	-	-	-	-	-	-	-	-	-	1.33	1.33	1.33	1.28	1.18	1.08	0.99	0.91	0.85	0.79
	VPH2 VPE	140	2 x M8 Bolts	10	1.07	0.99	0.99	0.91	0.85	0.80	0.75	0.70	1.71	1.55	1.55	1.52	1.38	1.27	1.16	1.07	0.99	0.99	0.91
	VPH2	190+	2 x M8 Bolts	11	1.13	1.13	1.08	1.00	0.94	0.88	0.81	0.76	2.40	1.68	1.68	1.68	1.63	1.49	1.36	1.25	1.16	1.08	1.00
	VPE	190+	2 x M8 Bolts	12	1.40	1.40	1.31	1.21	1.14	1.06	1.00	0.94	2.48	2.10	2.10	2.10	1.98	1.80	1.66	1.53	1.41	1.31	1.21

1. LOADING CLASS: Refer to Page 211 of this Manual for the scope of the Loading Class designations.
2. FASTENER DESIGNATIONS: M8 Bolts in the table refer to UNEX Part No's FB8 bolts (Class 70 Stainless Steel), bolts may be substituted with FE8 (M8) Threaded Studs made from 316 Stainless Steel.
3. HEIGHT 'H': is the overall height of the balustrade above the substrate level shown. Interpolate for Heights between those shown.
4. DESIGN WIND SPEED: in m/s, Refer to Pages 63 to 64 for details of applicable wind codes and the methods for determining the Design Wind Speed.

DRY TIMBER - SIDE FIXING, BOLTS

Refer to all notes on Pages 81 and 82 which shall apply to this specification and the relevant pages in Chapter 5 Installation Guides. Refer also to Chapter 2 for the Style Specification.

APS2 & APE2 POST TYPES ONLY

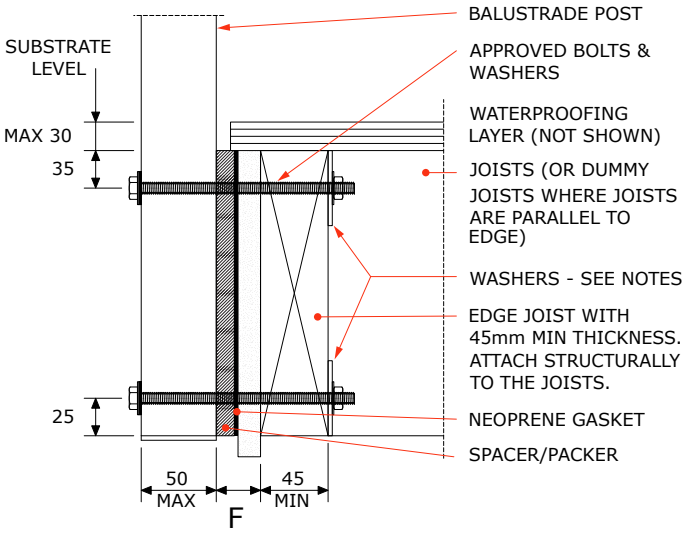

1. For details of approved fasteners refer to Note 3 on Page 81.
2. Washers to be fitted under screw and bolt heads shall be as follows
   - For 8mm bolts - 22mm O.D. S/S washer (Part No. FW8-22) with a polymer washer (Part No. FWP8-22G) between the S/S and the aluminium.
   - For washers bearing against timber use 50 x 50 x 3mm stainless steel washers (Part No. FW10-50SQ).
3. Substrate design including waterproofing, the structural design of the timber members and their connections, is beyond the scope of this specification and must be carried out by others.
4. Spacings in Table below are based on Dry timber, using Pinus Radiata with a maximum in-service moisture content of 18%. For Wet timber, where the in-service moisture contents will exceed 18%, refer to specification FS.2S.06.03 on Page 107.
5. Substrate design including waterproofing and the structural design of the timber substrate and its connections are not included in this specification and must be carried out by others.

MAXIMUM POST CENTRES 'S max' (metres)

ALWAYS TAKE THE LESSER OF THE VALUE BELOW AND THE VALUE FROM THE STYLE SPECIFICATION

Height[3]	Post Type	Joist Size	Fasteners - Qty and Type[2]	Line No.	LOADING CLASS[1]																		
					N07C/N07R								N03R	Not Preventing Falls									
					Design Wind Speed[4]									Design Wind Speed[4]									
					VH		EH							M			H			VH		EH	
					50	52	54	56	58	60	62	64	1	38	40	42	44	46	48	50	52	54	56
1.0	APS2 APE2	140	2 x M8 Bolts	1	1.22	1.22	1.17	1.09	1.02	0.95	0.95	0.95	1.71	2.16	2.14	1.94	1.77	1.62	1.48	1.37	1.26	1.17	1.09
	APS2	190+	2 x M8 Bolts	2	1.58	1.58	1.58	1.58	1.53	1.43	1.34	1.25	2.42	2.81	2.81	2.81	2.65	2.43	2.23	2.05	1.90	1.76	1.64
	APE2	190	2 x M8 Bolts	3	1.88	1.88	1.83	1.70	1.59	1.48	1.39	1.30	2.42	3.01	3.01	3.01	2.76	2.52	2.32	2.14	1.98	1.83	1.70
	APE2	240+	2 x M8 Bolts	4	2.08	2.08	2.08	2.08	2.00	1.88	1.75	1.65	3.28	3.70	3.70	3.70	3.49	3.19	2.93	2.70	2.50	2.31	2.15
1.1	APS2 APE2	140	2 x M8 Bolts	5	1.12	1.06	0.99	0.95	0.95	0.95	0.89	0.83	1.71	1.83	1.80	1.63	1.49	1.36	1.25	1.15	1.06	0.99	0.95
	APS2	190+	2 x M8 Bolts	6	1.44	1.44	1.44	1.36	1.28	1.19	1.11	1.05	2.23	2.34	2.34	2.34	2.21	2.03	1.86	1.71	1.59	1.48	1.36
	APE2	190	2 x M8 Bolts	7	1.74	1.67	1.55	1.44	1.34	1.25	1.17	1.10	2.23	2.55	2.55	2.55	2.33	2.13	1.96	1.80	1.67	1.55	1.44
	APE2	240+	2 x M8 Bolts	8	1.90	1.90	1.90	1.79	1.68	1.56	1.46	1.38	3.03	3.09	3.09	3.09	2.90	2.65	2.44	2.25	2.08	1.93	1.79
1.2	APS2 APE2	140	2 x M8 Bolts	9	0.98	0.95	0.95	0.91	0.85	0.80	0.75	0.70	1.71	1.55	1.54	1.39	1.27	1.16	1.07	0.98	0.95	0.95	0.91
	APS2	190+	2 x M8 Bolts	10	1.33	1.33	1.25	1.16	1.08	1.01	0.95	0.89	2.07	1.99	1.99	1.99	1.88	1.71	1.58	1.45	1.34	1.25	1.16
	APE2	190	2 x M8 Bolts	11	1.54	1.43	1.32	1.23	1.15	1.07	1.00	0.95	2.07	2.20	2.20	2.19	1.99	1.83	1.68	1.54	1.43	1.32	1.23
	APE2	240+	2 x M8 Bolts	12	1.74	1.74	1.63	1.51	1.41	1.33	1.24	1.16	2.81	2.61	2.61	2.61	2.45	2.25	2.06	1.90	1.76	1.63	1.51

1. LOADING CLASS: Refer to Page 211 of this Manual for the scope of the Loading Class designations.
2. FASTENER DESIGNATIONS: M8 Bolts in the table refer to UNEX Part No's FB8 bolts (Class 70 Stainless Steel), bolts may be substituted with FE8 (M8) Threaded Studs made from 316 Stainless Steel.
3. HEIGHT 'H': is the overall height of the balustrade above the substrate level shown. Interpolate for Heights between those shown.
4. DESIGN WIND SPEED: in m/s, Refer to Pages 63 to 64 for details of applicable wind codes and the methods for determining the Design Wind Speed.

DRY TIMBER - DKG2 FIXING, SCREWS, 90MM EDGE JOIST

This specification for fixing UNEX Balustrades to certain timber substrates where a face gutter is also required. It applies to balustrade styles using VPH2 or VPE posts only. A separate specification must be referred to for the required balustrade style.

VPH2 & VPE POST TYPES ONLY

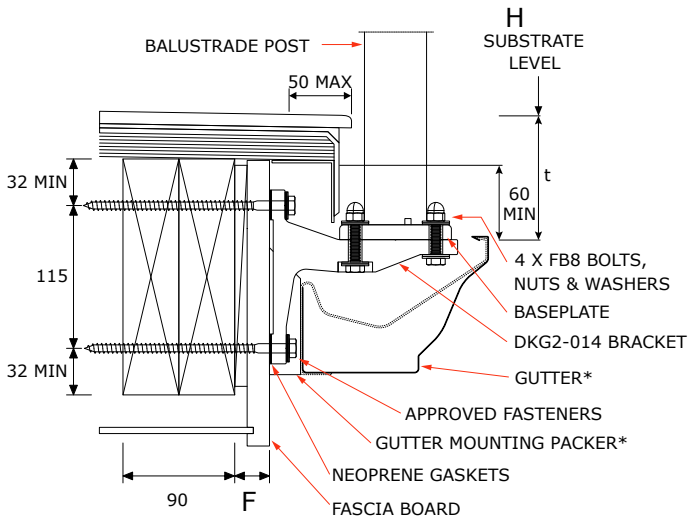

*Gutter and associated clips flashings and packers are not supplied by the UNEX Systems or the balustrade installer. Additional flashings may be required for water deflection in some cases. Gutter profile illustrated is "150mm O/G" from "Continuous Spouting", for more information on supplier visit www.cspout.co.nz. Other gutter profiles may be used. We do not recommend using copper gutters with this detail.

1. The DKG2-014 brackets are required to be installed before the gutter and drip edge.
2. The VPH2 or VPE balustrade posts are attached to the BSMF baseplate and DKG2 bracket as illustrated on page 176.
3. The threaded portion of the coach screws must be engaged with the structural timber framing by a minimum of 90mm. This will exist if the dimension 'F' on the diagram (i.e. the distance from the back of the bracket to the face of the timber joist) is within the limits shown in the Table. Where this does not occur the post spacing must be reduced by the proportion of the thread engagement to 90mm
4. Fasteners must be only those supplied by UNEX. Washers to be fitted under screw and bolt heads shall be as follows
   - For FB8 bolts - 22mm O.D. S/S washer (Part No. FW8-22) with a polymer washer (Part No. FWP8-22G) between the S/S and the aluminium.
   - For FC8-165 fasteners - washers supplied with fasteners.
5. The screw holes must be sealed as shown in figure 19 of E2/AS1. Check the suitability of screw protrusion beyond the timber framing.
6. Substrate design including waterproofing and the structural design of the timber substrate and its connections are not included in this specification and must be carried out by others.

MAXIMUM POST CENTRES 'S max' (metres)

ALWAYS TAKE THE LESSER OF THE VALUE BELOW AND THE VALUE FROM THE STYLE SPECIFICATION

Height[3]	't' (See diagram)	Post Type	Fasteners - Qty and Type[2]	'F' (See diagram)	Line No.	LOADING CLASS[1]																	
						N07C/N07R								N03R	Not Preventing Falls								
						Design Wind Speed[4]									Design Wind Speed[4]								
						VH			EH						M			H			VH		EH
						50	52	54	56	58	60	62	64	1	38	40	42	44	46	48	50	52	54	56
1.0	100	VPH2	4 x FC8-165	14-60	1	1.06	1.03	0.96	0.89	0.83	0.78	0.73	0.68	2.26	1.93	1.74	1.58	1.44	1.32	1.21	1.12	1.03	1.03	1.03
	100	VPE	4 x FC8-165	14-60	2	1.06	1.03	0.96	0.89	0.83	0.78	0.73	0.68	2.26	1.93	1.74	1.58	1.44	1.32	1.21	1.12	1.03	1.03	1.03
	150	VPH2	4 x FC8-165	14-60	3	1.01	0.95	0.88	0.82	0.77	0.72	0.67	0.63	2.16	1.78	1.61	1.46	1.33	1.22	1.12	1.03	0.95	0.95	0.95
	150	VPE	4 x FC8-165	14-60	4	1.01	0.95	0.88	0.82	0.77	0.72	0.67	0.63	2.16	1.78	1.61	1.46	1.33	1.22	1.12	1.03	0.95	0.95	0.95
	200	VPE	4 x FC8-165	14-60	5	0.96	0.88	0.82	0.76	0.71	0.66	0.62	0.58	2.07	1.66	1.49	1.36	1.24	1.13	1.04	0.96	0.88	0.88	0.88
	250	VPE	4 x FC8-165	14-60	6	0.89	0.83	0.77	0.71	0.66	0.62	0.58	0.55	1.99	1.55	1.40	1.27	1.15	1.05	0.97	0.89	0.83	0.83	0.83
	300	VPE	4 x FC8-165	14-60	7	0.84	0.77	0.72	0.67	0.62	0.58	0.54	0.51	1.91	1.45	1.31	1.19	1.08	0.99	0.91	0.84	0.77	0.77	0.77
	350	VPE	4 x FC8-165	14-60	9	0.79	0.73	0.68	0.63	0.59	0.55	0.51	0.48	1.84	1.36	1.23	1.12	1.02	0.93	0.85	0.79	0.73	0.73	0.73

1. LOADING CLASS: Refer to Page 211 of this Manual for the scope of the Loading Class designations.
2. FASTENER DESIGNATIONS: beginning with 'F' are part numbers for fasteners supplied by UNEX eg. FC8-165: FC = Coach Screw Stainless Steel. 8 = 8mm diameter, 165 = length in mm; Substitution with other fasteners is not permitted.
3. HEIGHT 'H': is the overall height of the balustrade above the substrate level shown. Interpolate for Heights between those shown.
4. DESIGN WIND SPEED: in m/s, Refer to Pages 63 to 64 for details of applicable wind codes and the methods for determining the Design Wind Speed.

DRY TIMBER - DKG2 FIXING, SCREWS, 90MM EDGE JOIST

This specification for fixing UNEX Balustrades to certain timber substrates where a face gutter is also required. It applies to balustrade styles using APS2 or APE2 posts only. A separate specification must be referred to for the required balustrade style.

APS2 & APE2 POST TYPES ONLY

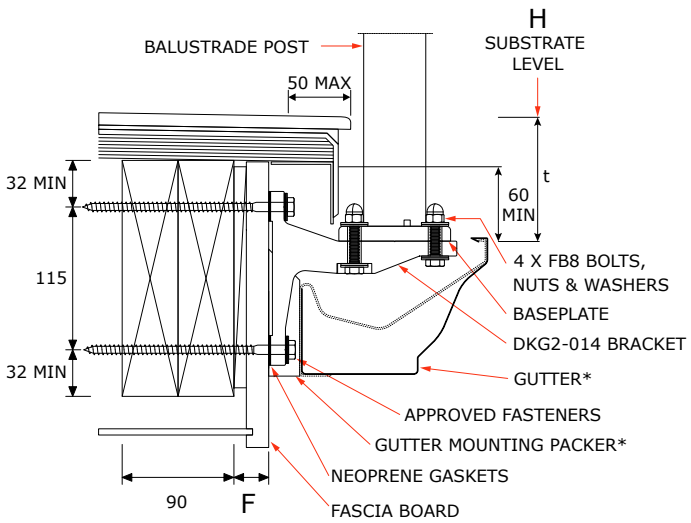

*Gutter and associated clips flashings and packers are not supplied by the UNEX Systems or the balustrade installer. Additional flashings may be required for water deflection in some cases. Gutter profile illustrated is "150mm O/G" from "Continuous Spouting", for more information on supplier visit www.cspout.co.nz. Other gutter profiles may be used. We do not recommend using copper gutters with this detail.

1. The DKG2-014 brackets are required to be installed before the gutter and drip edge.
2. The APS2 or APE2 balustrade posts are attached to the BSMF or BEMF baseplate and DKG2-014 bracket as illustrated on page 176.
3. The threaded portion of the coach screws must be engaged with the structural timber framing by a minimum of 90mm. This will exist if the dimension 'F' on the diagram (i.e. the distance from the back of the bracket to the face of the timber joist) is within the limits shown in the Table. Where this does not occur the post spacing must be reduced by the proportion of the thread engagement to 90mm
4. Fasteners must be only those supplied by UNEX. Washers to be fitted under screw and bolt heads shall be as follows
   - For FB8 bolts - 22mm O.D. S/S washer (Part No. FW8-22) with a polymer washer (Part No. FWP8-22G) between the S/S and the aluminium.
   - For FC8-165 fasteners - washers supplied with fasteners.
5. The screw holes must be sealed as shown in figure 19 of E2/AS1. Check the suitability of screw protrusion beyond the timber framing.
6. Substrate design including waterproofing and the structural design of the timber substrate and its connections are not included in this specification and must be carried out by others.

MAXIMUM POST CENTRES 'S max' (metres)

ALWAYS TAKE THE LESSER OF THE VALUE BELOW AND THE VALUE FROM THE STYLE SPECIFICATION

Height[3]	't' (See diagram)	Post Type	Fasteners - Qty and Type[2]	'F' (See diagram)	Line No.	LOADING CLASS[1]																		
						N07C/N07R								N03R	Not Preventing Falls									
						Design Wind Speed[4]									Design Wind Speed[4]									
						VH		EH							M			H			VH		EH	
						50	52	54	56	58	60	62	64	1	38	40	42	44	46	48	50	52	54	56
1.0	100	APS2	4 x FC8-165	14-60	1	1.06	1.03	0.96	0.89	0.83	0.78	0.73	0.68	2.26	1.93	1.74	1.58	1.44	1.32	1.21	1.12	1.03	1.03	1.03
	100	APE2	4 x FC8-165	14-60	2	1.28	1.25	1.16	1.08	1.01	0.94	0.88	0.83	2.75	2.35	2.12	1.92	1.75	1.60	1.47	1.36	1.25	1.25	1.25
	150	APS2	4 x FC8-165	14-60	3	1.01	0.95	0.88	0.82	0.77	0.72	0.67	0.63	2.16	1.78	1.61	1.46	1.33	1.22	1.12	1.03	0.95	0.95	0.95
	150	APE2	4 x FC8-165	14-60	4	1.23	1.16	1.07	1.00	0.93	0.87	0.81	0.76	2.63	2.17	1.96	1.77	1.62	1.48	1.36	1.25	1.16	1.16	1.16
	200	APE2	4 x FC8-165	14-60	5	1.16	1.07	1.00	0.93	0.86	0.81	0.76	0.71	2.52	2.01	1.82	1.65	1.50	1.37	1.26	1.16	1.07	1.07	1.07
	250	APE2	4 x FC8-165	14-60	6	1.08	1.00	0.93	0.86	0.81	0.75	0.71	0.66	2.42	1.88	1.70	1.54	1.40	1.28	1.18	1.08	1.00	1.00	1.00
	300	APE2	4 x FC8-165	14-60	7	1.02	0.94	0.87	0.81	0.76	0.71	0.66	0.62	2.32	1.76	1.59	1.44	1.31	1.20	1.10	1.02	0.94	0.94	0.94
	350	APE2	4 x FC8-165	14-60	9	0.96	0.89	0.82	0.76	0.71	0.66	0.62	0.58	2.24	1.66	1.50	1.36	1.24	1.13	1.04	0.96	0.89	0.89	0.89

1. LOADING CLASS: Refer to Page 211 of this Manual for the scope of the Loading Class designations.
2. FASTENER DESIGNATIONS: beginning with 'F' are part numbers for fasteners supplied by UNEX eg. FC8-165: FC = Coach Screw Stainless Steel. 8 = 8mm diameter, 165 = length in mm; Substitution with other fasteners is not permitted.
3. HEIGHT 'H': is the overall height of the balustrade above the substrate level shown. Interpolate for Heights between those shown.
4. DESIGN WIND SPEED: in m/s, Refer to Pages 63 to 64 for details of applicable wind codes and the methods for determining the Design Wind Speed.

DRY TIMBER - DKFB FIXING, SCREWS, 90MM EDGE JOIST

Refer to all notes on Pages 81 and 82 which shall apply to this specification and the relevant pages in Chapter 5 Installation Guides. Refer also to Chapter 2 for the Style Specification.

VPH2 & VPE POST TYPES ONLY

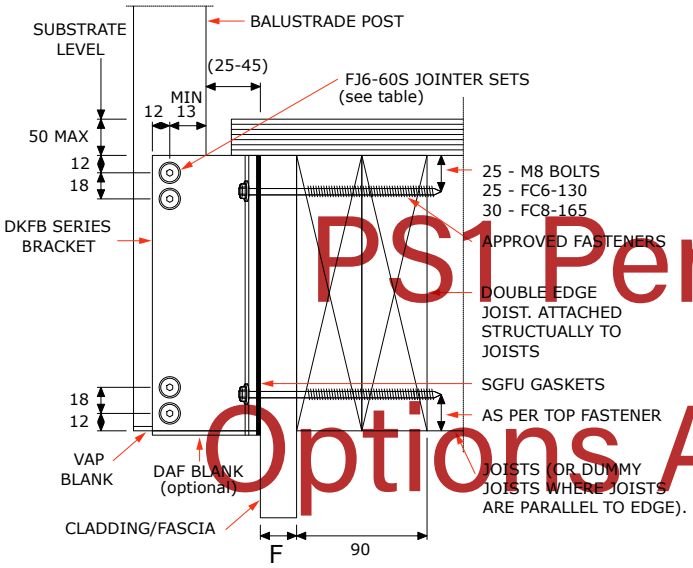

Note: VIH Stiffener required for VPH2, VPE Posts.
No stiffener required for VPM2 Post.
See page 146 for details.

1. For details of approved fasteners refer to Note 3 on Page 81.
2. The post spacings shown are based on the fixing screws having Fully Developed Thread - FDT (i.e. excluding the unthreaded shank) engaging with 84mm of the timber joist. This will exist if dimension 'F' on the diagram (i.e. the distance from the back of the bracket to the face of the timber joist) is within the following limits:
   - FC8-165 9mm to 40mm
   - FC6-130 25mm to 35mm

   Where this does not occur, the post spacing must be reduced by the proportion of thread engagement to 84mm. Check suitability of screw protrusion on the inside where this may occur.
3. Attach DKFB series brackets using the number of sets of FJ6-60S jointer bolts/ nuts shown in the table.
4. Washers to be fitted under screw and bolt heads shall be as follows:
   - For 8mm bolts - 22mm O.D. S/S washer (Part No. FW8-22) with a polymer washer (Part No. FWP8-22G) between the S/S and the aluminium.
   - For washers bearing against timber use 50 x 50 x 3mm stainless steel washers (Part No. FW10-50SQ).
5. At 90° corners, set posts back from corners as required for fixings to engage with joists and overhang the rails as required to obtain 100mm maximum gap.
6. Substrate design including waterproofing and the structural design of the timber members and their connections to each other are to be designed by others.

PS1 Pending - Options Available. Please confirm with UNEX tech@Unex.co.nz

WET TIMBER - TOP FIXING, 65MM CRS

Refer to all notes on Pages 81 and 82 which shall apply to this specification and the relevant pages in Chapter 5 Installation Guides. Refer also to Chapter 2 for the Style Specification.

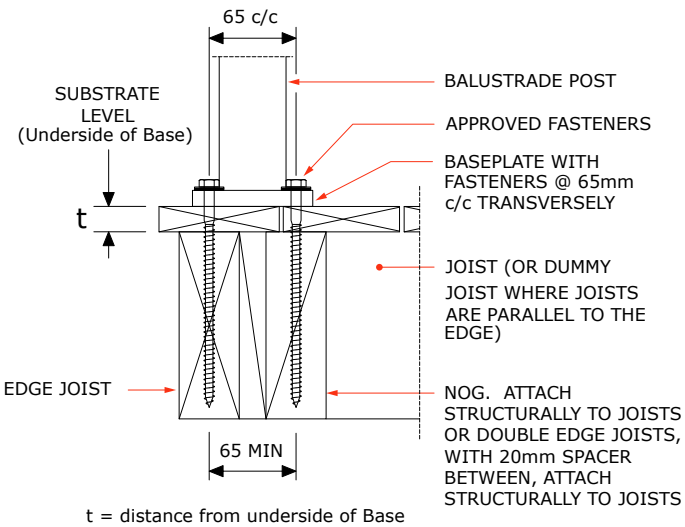

t = distance from underside of Base Plate to top of structural timber

1. For details of approved fasteners refer to Note 3 on Page 81.
2. Washers to be fitted under screw and bolt heads shall be as follows
   - For 6mm fasteners - washer supplied with fasteners.
   - For FC8-165 fasteners - washer supplied with fasteners.
   - For 8mm bolts - 22mm O.D. S/S washer (Part No. FW8-22) with a polymer washer (Part No. FWP8-22G) between the S/S and the aluminium.
   - For Washers bearing against timber use 50 x 50 x 3mm stainless steel washers Part No FW10-50SQ.
3. Substrate design including waterproofing and the structural design of the timber substrate and its connections are not included in this specification and must be carried out by others.
4. Important, the FC8-165 coachscrews in this specification are to be used with the "**Sika Supergrip 2 Hour**" adhesive system (TASG).

MAXIMUM POST CENTRES 'S max' (metres)

ALWAYS TAKE THE LESSER OF THE VALUE BELOW AND THE VALUE FROM THE STYLE SPECIFICATION

Height[3]	Baseplate Size D x W	Fasteners - Qty and Type[2]	t' (See diagram)	Line No.	LOADING CLASS[1]																			
					N07C/N07R								N03R	Not Preventing Falls										
					Design Wind Speed[4]									Design Wind Speed[4]										
					VH		EH							M			H			VH			EH	
					50	52	54	56	58	60	62	64		38	40	42	44	46	48	50	52	54	56
1.0	90x115	4 x FC8-165	19	1	1.13	1.13	1.13	1.11	1.03	0.96	0.90	0.85	2.43	2.40	2.17	1.97	1.79	1.64	1.51	1.39	1.28	1.19	1.11
	90x115	4 x FC8-165	25	2	1.07	1.07	1.07	1.05	0.97	0.91	0.85	0.80	2.30	2.27	2.05	1.86	1.69	1.55	1.42	1.31	1.21	1.12	1.05
	90x115	4 x FC8-165	32	3	1.01	1.01	1.01	0.98	0.91	0.85	0.80	0.75	2.16	2.12	1.91	1.73	1.58	1.45	1.33	1.22	1.13	1.05	0.98
	90x115	4 x M8 Bolts	N/A	4	1.34	1.34	1.34	1.30	1.21	1.13	1.06	0.99	2.87	2.81	2.54	2.30	2.10	1.92	1.76	1.62	1.50	1.39	1.30
1.1	90x115	4 x FC8-165	19	5	1.03	1.03	0.99	0.92	0.86	0.80	0.75	0.70	2.21	1.99	1.80	1.63	1.49	1.36	1.25	1.15	1.06	0.99	0.92
	90x115	4 x FC8-165	25	6	0.98	0.98	0.93	0.87	0.81	0.76	0.71	0.66	2.10	1.88	1.70	1.54	1.41	1.29	1.18	1.09	1.01	0.93	0.87
	90x115	4 x FC8-165	32	7	0.92	0.92	0.87	0.81	0.76	0.71	0.66	0.62	1.97	1.76	1.59	1.44	1.31	1.20	1.10	1.02	0.94	0.87	0.81
	90x115	4 x M8 Bolts	N/A	8	1.22	1.22	1.16	1.08	1.00	0.94	0.88	0.82	2.62	2.34	2.11	1.91	1.74	1.60	1.47	1.35	1.25	1.16	1.08
1.2	90x115	4 x FC8-165	19	9	0.95	0.90	0.83	0.77	0.72	0.67	0.63	0.59	2.03	1.68	1.52	1.38	1.25	1.15	1.05	0.97	0.90	0.83	0.77
	90x115	4 x FC8-165	25	10	0.90	0.85	0.79	0.73	0.68	0.64	0.60	0.56	1.93	1.59	1.43	1.30	1.19	1.08	1.00	0.92	0.85	0.79	0.73
	90x115	4 x FC8-165	32	11	0.85	0.79	0.74	0.68	0.64	0.60	0.56	0.52	1.81	1.49	1.34	1.22	1.11	1.01	0.93	0.86	0.79	0.74	0.68
	90x115	4 x M8 Bolts	N/A	12	1.12	1.05	0.98	0.91	0.85	0.79	0.74	0.70	2.41	1.97	1.78	1.62	1.47	1.35	1.24	1.14	1.05	0.98	0.91

1. LOADING CLASS: Refer to Page 211 of this Manual for the scope of the Loading Class designations.
2. FASTENER DESIGNATIONS: beginning with 'F' are part numbers for fasteners supplied by UNEX eg. FC8-165: FC = Coach Screw Stainless Steel. 8 = 8mm diameter, 165 = length in mm; Substitution with other fasteners is not permitted.
3. HEIGHT 'H': is the overall height of the balustrade above the substrate level shown. Interpolate for Heights between those shown.
4. DESIGN WIND SPEED: in m/s, Refer to Pages 63 to 64 for details of applicable wind codes and the methods for determining the Design Wind Speed.

WET TIMBER - TOP FIXING, 90MM CRS

Refer to all notes on Pages 81 and 82 which shall apply to this specification and the relevant pages in Chapter 5 Installation Guides. Refer also to Chapter 2 for the Style Specification.

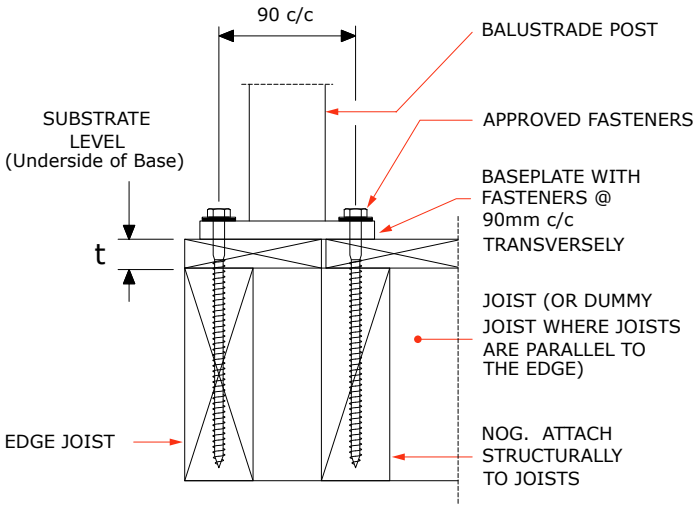

t = distance from underside of Base Plate to top of structural timber

1. For details of approved fasteners refer to Note 3 on Page 81.
2. Washers to be fitted under screw and bolt heads shall be as follows
   - For 6mm fasteners - washer supplied with fasteners.
   - For FC8-165 fasteners - washer supplied with fasteners.
   - For 8mm bolts - 22mm O.D. S/S washer (Part No. FW8-22) with a polymer washer (Part No. FWP8-22G) between the S/S and the aluminium.
   - For Washers bearing against timber use 50 x 50 x 3mm stainless steel washers Part No FW10-50SQ.
3. Substrate design including waterproofing and the structural design of the timber substrate and its connections are not included in this specification and must be carried out by others.
4. Important, the FC8-165 coachscrews in this specification are to be used with the "**Sika Supergrip 2 Hour**" adhesive system (TASG).

MAXIMUM POST CENTRES 'S max' (metres)

ALWAYS TAKE THE LESSER OF THE VALUE BELOW AND THE VALUE FROM THE STYLE SPECIFICATION

Height[3]	Baseplate Size D x W	Fasteners - Qty and Type[2]	t' (See dia-gram)	Line No.	LOADING CLASS[1]																			
					N07C/N07R								N03R	Not Preventing Falls										
					Design Wind Speed[4]									Design Wind Speed[4]										
					VH		EH							M			H			VH			EH	
					50	52	54	56	58	60	62	64		38	40	42	44	46	48	50	52	54	56
1.0	115x105	4 x FC8-165	19	1	1.47	1.47	1.47	1.44	1.34	1.26	1.18	1.10	3.16	3.13	2.83	2.56	2.33	2.14	1.96	1.81	1.67	1.55	1.44
	115x105	4 x FC8-165	25	2	1.40	1.40	1.40	1.36	1.27	1.18	1.11	1.04	2.99	2.95	2.66	2.41	2.20	2.01	1.85	1.70	1.57	1.46	1.36
	115x105	4 x FC8-165	32	3	1.30	1.30	1.30	1.26	1.18	1.10	1.03	0.97	2.80	2.74	2.47	2.24	2.04	1.87	1.72	1.58	1.46	1.36	1.26
	115x105	4 x M8 Bolts	N/A	4	1.86	1.86	1.86	1.79	1.67	1.56	1.46	1.37	3.98	3.90	3.52	3.19	2.91	2.66	2.44	2.25	2.08	1.93	1.79
1.1	115x105	4 x FC8-165	19	5	1.34	1.34	1.29	1.20	1.11	1.04	0.98	0.92	2.88	2.60	2.34	2.12	1.94	1.77	1.63	1.50	1.39	1.29	1.20
	115x105	4 x FC8-165	25	6	1.27	1.27	1.21	1.13	1.05	0.98	0.92	0.86	2.72	2.45	2.21	2.00	1.82	1.67	1.53	1.41	1.31	1.21	1.13
	115x105	4 x FC8-165	32	7	1.19	1.19	1.13	1.05	0.98	0.91	0.85	0.80	2.55	2.28	2.05	1.86	1.70	1.55	1.43	1.31	1.22	1.13	1.05
	115x105	4 x M8 Bolts	N/A	8	1.69	1.69	1.60	1.49	1.39	1.30	1.22	1.14	3.63	3.24	2.92	2.65	2.41	2.21	2.03	1.87	1.73	1.60	1.49
1.2	115x105	4 x FC8-165	19	9	1.23	1.17	1.08	1.01	0.94	0.88	0.82	0.77	2.64	2.19	1.97	1.79	1.63	1.49	1.37	1.26	1.17	1.08	1.01
	115x105	4 x FC8-165	25	10	1.17	1.10	1.02	0.95	0.89	0.83	0.78	0.73	2.50	2.06	1.86	1.69	1.54	1.41	1.29	1.19	1.10	1.02	0.95
	115x105	4 x FC8-165	32	11	1.09	1.03	0.95	0.88	0.82	0.77	0.72	0.68	2.34	1.92	1.73	1.57	1.43	1.31	1.20	1.11	1.03	0.95	0.88
	115x105	4 x M8 Bolts	N/A	12	1.55	1.46	1.35	1.26	1.17	1.10	1.03	0.96	3.33	2.73	2.47	2.24	2.04	1.86	1.71	1.58	1.46	1.35	1.26

1. LOADING CLASS: Refer to Page 211 of this Manual for the scope of the Loading Class designations.
2. FASTENER DESIGNATIONS: beginning with 'F' are part numbers for fasteners supplied by UNEX eg. FC8-165: FC = Coach Screw Stainless Steel. 8 = 8mm diameter, 165 = length in mm; Substitution with other fasteners is not permitted.
3. HEIGHT 'H': is the overall height of the balustrade above the substrate level shown. Interpolate for Heights between those shown.
4. DESIGN WIND SPEED: in m/s, Refer to Pages 63 to 64 for details of applicable wind codes and the methods for determining the Design Wind Speed.

WET TIMBER - SIDE FIXING, SCREWS, 90MM EDGE JOIST

Refer to all notes on Pages 81 and 82 which shall apply to this specification and the relevant pages in Chapter 5 Installation Guides. Refer also to Chapter 2 for the Style Specification.

VPM2, VPH2 & VPE POST TYPES ONLY

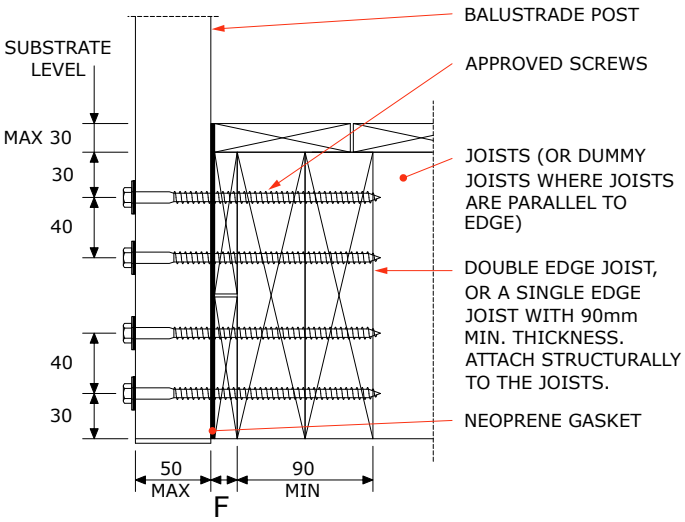

Note: VIH Stiffener required for VPH2, VPE Posts.
No stiffener required for VPM2 Post.
See page 146 for details.

1. For details of approved fasteners refer to Note 3 on Page 81.
2. The post spacings shown are based on the fixing screws having Fully Developed Thread - FDT (i.e. excluding the unthreaded shank) engaging with the full width of the timber joist. This will exist if the dimension 'F' on the diagram is within the limits shown in the Table. Where this does not occur, the post spacing must be reduced, by the proportion of FDT engagement to 90mm. Check suitability of screw protrusion on the inside where this may occur. Sizes of Pass holes in the posts shall not exceed screw diameter plus 1mm.
3. Washers to be fitted under screw and bolt heads shall be as follows
   - For 8mm fasteners - washer supplied with fasteners.
4. Substrate design including waterproofing and the structural design of the timber substrate and its connections are not included in this specification and must be carried out by others.
5. Important, the FC8-165 coachscrews in this specification are to be used with the "**Sika Supergrip 2 Hour**" adhesive system (TASG).

MAXIMUM POST CENTRES 'S max' (metres)

ALWAYS TAKE THE LESSER OF THE VALUE BELOW AND THE VALUE FROM THE STYLE SPECIFICATION

Height[3]	Post Type	Joist Size	Fasteners - Qty and Type[2]	'F' (See diagram)	Line No.	LOADING CLASS[1]																			
						N07C/N07R								N03R	Not Preventing Falls										
						Design Wind Speed[4]									Design Wind Speed[4]										
						VH			EH						M			H			VH			EH	
						50	52	54	56	58	60	62	64	N/A	38	40	42	44	46	48	50	52	54	56
1.0	VPM2	190+	4 x FC8-165	0-20	1	1.10	1.10	1.02	0.95	0.88	0.82	0.77	0.72	2.36	2.06	1.86	1.68	1.53	1.40	1.29	1.19	1.10	1.02	0.95
	VPH2 VPE	140	3 x FC8-165	0-20	2	-	-	-	-	-	-	-	-	-	1.21	1.09	0.99	0.90	0.82	0.76	0.70	0.65	0.60	0.56
	VPH2	190+	4 x FC8-165	0-20	3	1.10	1.10	1.02	0.95	0.88	0.82	0.77	0.72	2.36	2.06	1.86	1.68	1.53	1.40	1.29	1.19	1.10	1.02	0.95
	VPE	190	4 x FC8-165	0-20	4	1.10	1.10	1.02	0.95	0.88	0.82	0.77	0.72	2.36	2.06	1.86	1.68	1.53	1.40	1.29	1.19	1.10	1.02	0.95
	VPE	240+	4 x FC8-165	0-20	5	1.54	1.49	1.38	1.28	1.20	1.12	1.05	0.98	3.29	2.79	2.52	2.28	2.08	1.90	1.75	1.61	1.49	1.38	1.28
1.1	VPM2	190+	4 x FC8-165	0-20	6	-	-	-	-	-	-	-	-	-	1.74	1.57	1.43	1.30	1.19	1.09	1.01	0.93	0.86	0.80
	VPH2 VPE	140	3 x FC8-165	0-20	7	-	-	-	-	-	-	-	-	-	1.02	0.92	0.83	0.76	0.70	0.64	0.59	0.54	0.50	0.47
	VPH2	190+	4 x FC8-165	0-20	8	1.01	0.93	0.86	0.80	0.75	0.70	0.65	0.61	2.18	1.74	1.57	1.43	1.30	1.19	1.09	1.01	0.93	0.86	0.80
	VPE	190	4 x FC8-165	0-20	9	1.01	0.93	0.86	0.80	0.75	0.70	0.65	0.61	2.18	1.74	1.57	1.43	1.30	1.19	1.09	1.01	0.93	0.86	0.80
	VPE	240+	4 x FC8-165	0-20	10	1.37	1.27	1.18	1.09	1.02	0.95	0.89	0.84	3.05	2.37	2.14	1.94	1.77	1.62	1.49	1.37	1.27	1.18	1.09
1.2	VPM2	190+	4 x FC8-165	0-20	11	-	-	-	-	-	-	-	-	-	1.50	1.35	1.22	1.12	1.02	0.94	0.86	0.80	0.74	0.69
	VPH2 VPE	140	3 x FC8-165	0-20	12	-	-	-	-	-	-	-	-	-	0.87	0.79	0.71	0.65	0.59	0.55	0.50	0.47	0.43	0.40
	VPH2	190+	4 x FC8-165	0-20	13	0.86	0.80	0.74	0.69	0.64	0.60	0.56	0.53	2.02	1.50	1.35	1.22	1.12	1.02	0.94	0.86	0.80	0.74	0.69
	VPE	190	4 x FC8-165	0-20	14	0.86	0.80	0.74	0.69	0.64	0.60	0.56	0.53	2.02	1.50	1.35	1.22	1.12	1.02	0.94	0.86	0.80	0.74	0.69
	VPE	240+	4 x FC8-165	0-20	15	1.18	1.09	1.01	0.94	0.88	0.82	0.77	0.72	2.84	2.05	1.85	1.68	1.53	1.40	1.28	1.18	1.09	1.01	0.94

1. LOADING CLASS: Refer to Page 211 of this Manual for the scope of the Loading Class designations.
2. FASTENER DESIGNATIONS: beginning with 'F' are part numbers for fasteners supplied by UNEX eg. FC8-165: FC = Coach Screw Stainless Steel. 8 = 8mm diameter, 165 = length in mm; Substitution with other fasteners is not permitted.
3. HEIGHT 'H': is the overall height of the balustrade above the substrate level shown. Interpolate for Heights between those shown.
4. DESIGN WIND SPEED: in m/s, Refer to Pages 63 to 64 for details of applicable wind codes and the methods for determining the Design Wind Speed.

WET TIMBER - SIDE FIXING, SCREWS, 90MM EDGE JOIST

Refer to all notes on Pages 81 and 82 which shall apply to this specification and the relevant pages in Chapter 5 Installation Guides. Refer also to Chapter 2 for the Style Specification.

APS2 & APE2 POST TYPES ONLY

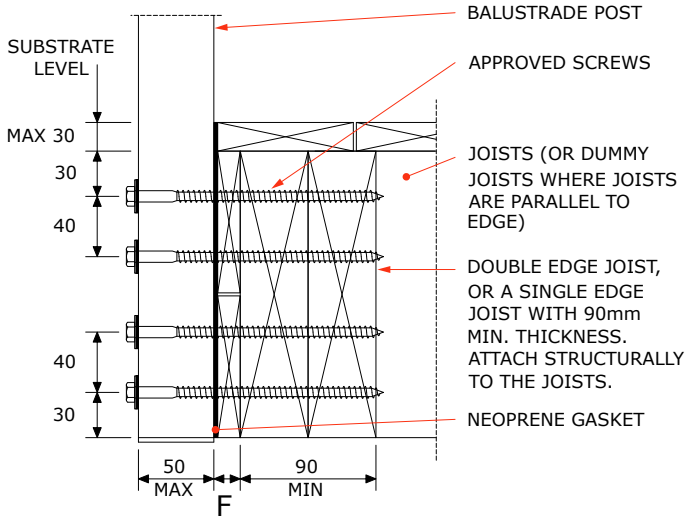

1. For details of approved fasteners refer to Note 3 on Page 81.
2. The post spacings shown are based on the fixing screws having Fully Developed Thread - FDT (i.e. excluding the unthreaded shank) engaging with the full width of the timber joist. This will exist if the dimension 'F' on the diagram is within the limits shown in the Table. Where this does not occur, the post spacing must be reduced, by the proportion of FDT engagement to 90mm. Check suitability of screw protrusion on the inside where this may occur. Sizes of Pass holes in the posts shall not exceed screw diameter plus 1mm.
3. Washers to be fitted under screw and bolt heads shall be as follows
4. For 8mm fasteners - washer supplied with fasteners.
5. Substrate design including waterproofing and the structural design of the timber substrate and its connections are not included in this specification and must be carried out by others.
6. The FC8-165 coachscrews are to be used with the **"Sika Supergrip 2 Hour"** adhesive system (TASG).

MAXIMUM POST CENTRES 'S max' (metres)

ALWAYS TAKE THE LESSER OF THE VALUE BELOW AND THE VALUE FROM THE STYLE SPECIFICATION

Height[3]	Post Type	Joist Size	Fasteners - Qty and Type[2]	'F' (See diagram)	Line No.	LOADING CLASS[1]																		
						N07C/N07R								N03R	Not Preventing Falls									
						Design Wind Speed[4]									Design Wind Speed[4]									
						VH		EH							M			H			VH		EH	
						50	52	54	56	58	60	62	64	N/A	38	40	42	44	46	48	50	52	54	56
1.0	APS2	190	4 x FC8-165	0-20	1	1.10	1.10	1.02	0.95	0.88	0.82	0.77	0.72	2.36	2.06	1.86	1.68	1.53	1.40	1.29	1.19	1.10	1.02	0.95
	APS2	240+	4 x FC8-165	0-20	2	1.54	1.49	1.38	1.28	1.20	1.12	1.05	0.98	3.29	2.79	2.52	2.28	2.08	1.90	1.75	1.61	1.49	1.38	1.28
	APE2	190	4 x FC8-165	0-20	3	1.10	1.10	1.02	0.95	0.88	0.82	0.77	0.72	2.36	2.06	1.86	1.68	1.53	1.40	1.29	1.19	1.10	1.02	0.95
	APE2	240	4 x FC8-165	0-20	4	1.54	1.49	1.38	1.28	1.20	1.12	1.05	0.98	3.29	2.79	2.52	2.28	2.08	1.90	1.75	1.61	1.49	1.38	1.28
	APE2	290	4 x FC8-165	0-20	5	1.94	1.83	1.70	1.58	1.47	1.37	1.29	1.21	4.16	3.43	3.09	2.81	2.56	2.34	2.15	1.98	1.83	1.70	1.58
1.1	APS2	190	4 x FC8-165	0-20	6	1.01	0.93	0.86	0.80	0.75	0.70	0.65	0.61	2.18	1.74	1.57	1.43	1.30	1.19	1.09	1.01	0.93	0.86	0.80
	APS2	240+	4 x FC8-165	0-20	7	1.37	1.27	1.18	1.09	1.02	0.95	0.89	0.84	3.05	2.37	2.14	1.94	1.77	1.62	1.49	1.37	1.27	1.18	1.09
	APE2	190	4 x FC8-165	0-20	8	1.01	0.93	0.86	0.80	0.75	0.70	0.65	0.61	2.18	1.74	1.57	1.43	1.30	1.19	1.09	1.01	0.93	0.86	0.80
	APE2	240	4 x FC8-165	0-20	9	1.37	1.27	1.18	1.09	1.02	0.95	0.89	0.84	3.05	2.37	2.14	1.94	1.77	1.62	1.49	1.37	1.27	1.18	1.09
	APE2	290	4 x FC8-165	0-20	10	1.69	1.57	1.45	1.35	1.26	1.18	1.10	1.03	3.86	2.93	2.64	2.40	2.19	2.00	1.84	1.69	1.57	1.45	1.35
1.2	APS2	190	4 x FC8-165	0-20	11	0.86	0.80	0.74	0.69	0.64	0.60	0.56	0.53	2.02	1.50	1.35	1.22	1.12	1.02	0.94	0.86	0.80	0.74	0.69
	APS2	240+	4 x FC8-165	0-20	12	1.18	1.09	1.01	0.94	0.88	0.82	0.77	0.72	2.84	2.05	1.85	1.68	1.53	1.40	1.28	1.18	1.09	1.01	0.94
	APE2	190	4 x FC8-165	0-20	13	0.86	0.80	0.74	0.69	0.64	0.60	0.56	0.53	2.02	1.50	1.35	1.22	1.12	1.02	0.94	0.86	0.80	0.74	0.69
	APE2	240	4 x FC8-165	0-20	14	1.18	1.09	1.01	0.94	0.88	0.82	0.77	0.72	2.84	2.05	1.85	1.68	1.53	1.40	1.28	1.18	1.09	1.01	0.94
	APE2	290	4 x FC8-165	0-20	15	1.46	1.35	1.26	1.17	1.09	1.02	0.95	0.89	3.51	2.54	2.29	2.08	1.89	1.73	1.59	1.46	1.35	1.26	1.17

1. LOADING CLASS: Refer to Page 211 of this Manual for the scope of the Loading Class designations.
2. FASTENER DESIGNATIONS: beginning with 'F' are part numbers for fasteners supplied by UNEX eg. FC8-165: FC = Coach Screw Stainless Steel. 8 = 8mm diameter, 165 = length in mm; Substitution with other fasteners is not permitted.
3. HEIGHT 'H': is the overall height of the balustrade above the substrate level shown. Interpolate for Heights between those shown.
4. DESIGN WIND SPEED: in m/s, Refer to Pages 63 to 64 for details of applicable wind codes and the methods for determining the Design Wind Speed.

WET TIMBER - SIDE FIXING, SCREWS, 135MM EDGE JOIST

Refer to all notes on Pages 81 and 82 which shall apply to this specification and the relevant pages in Chapter 5 Installation Guides. Refer also to Chapter 2 for the Style Specification.

VPM2, VPH2 & VPE POST TYPES ONLY

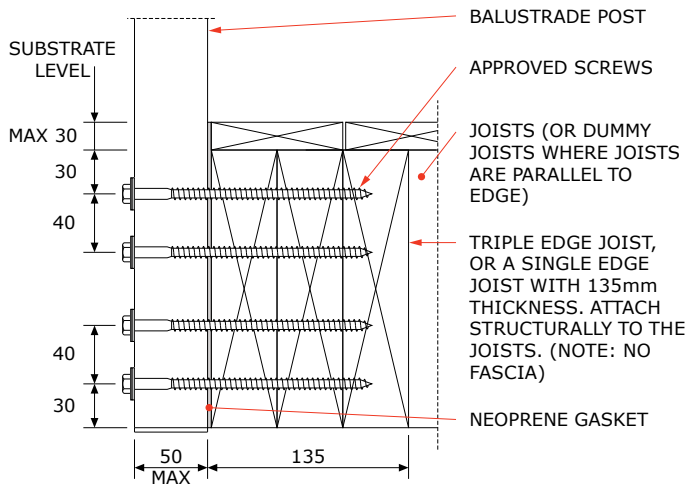

Note: VIH Stiffener required for VPH2, VPE Posts.
No stiffener required for VPM2 Post.
See page 146 for details.

1. For details of approved fasteners refer to Note 3 on Page 81.
2. The post spacings shown are based on the fixing screws having Fully Developed Thread - FDT (i.e. excluding the unthreaded shank) engaging for the full embedment of the screw. This will exist if the balustrade post is attached directly to the timber joist with no fascia or cladding between (except for the neoprene gasket). Sizes of Pass holes in the posts shall not exceed screw diameter plus 1mm.
3. Washers to be fitted under screw and bolt heads shall be as follows
   - For 8mm fasteners - washer supplied with fasteners.
4. Substrate design including waterproofing and the structural design of the timber substrate and its connections are not included in this specification and must be carried out by others.
5. Important, the FC8-165 coachscrews in this specification are to be used with the "**Sika Supergrip 2 Hour**" adhesive system (TASG).

MAXIMUM POST CENTRES 'S max' (metres)

ALWAYS TAKE THE LESSER OF THE VALUE BELOW AND THE VALUE FROM THE STYLE SPECIFICATION

Height[3]	Post Type	Joist Size	Fasteners - Qty and Type[2]	Line No.	LOADING CLASS[1]																			
					N07C/N07R								N03R	Not Preventing Falls										
					Design Wind Speed[4]									Design Wind Speed[4]										
					VH			EH						M			H			VH			EH	
					50	52	54	56	58	60	62	64	N/A	38	40	42	44	46	48	50	52	54	56
1.0	VPM2	190+	4 x FC8-165	1	1.38	1.38	1.30	1.21	1.13	1.05	0.99	0.93	2.96	2.63	2.37	2.15	1.96	1.79	1.65	1.52	1.40	1.30	1.21
	VPH2	190	4 x FC8-165	2	1.38	1.38	1.30	1.21	1.13	1.05	0.99	0.93	2.96	2.63	2.37	2.15	1.96	1.79	1.65	1.52	1.40	1.30	1.21
	VPH2	240+	4 x FC8-165	3	1.93	1.90	1.76	1.64	1.52	1.42	1.33	1.25	4.13	3.55	3.21	2.91	2.65	2.42	2.23	2.05	1.90	1.76	1.64
	VPE	190	4 x FC8-165	4	1.38	1.38	1.30	1.21	1.13	1.05	0.99	0.93	2.96	2.63	2.37	2.15	1.96	1.79	1.65	1.52	1.40	1.30	1.21
	VPE	240+	4 x FC8-165	5	1.93	1.90	1.76	1.64	1.52	1.42	1.33	1.25	4.13	3.55	3.21	2.91	2.65	2.42	2.23	2.05	1.90	1.76	1.64
1.1	VPM2	190+	4 x FC8-165	6	-	-	-	-	-	-	-	-	-	2.22	2.00	1.82	1.66	1.51	1.39	1.28	1.19	1.10	1.02
	VPH2	190	4 x FC8-165	7	1.26	1.19	1.10	1.02	0.95	0.89	0.83	0.78	2.69	2.22	2.00	1.82	1.66	1.51	1.39	1.28	1.19	1.10	1.02
	VPH2	240+	4 x FC8-165	8	1.74	1.61	1.49	1.39	1.29	1.21	1.13	1.06	3.75	3.02	2.72	2.47	2.25	2.06	1.89	1.74	1.61	1.49	1.39
	VPE	190	4 x FC8-165	9	1.26	1.19	1.10	1.02	0.95	0.89	0.83	0.78	2.69	2.22	2.00	1.82	1.66	1.51	1.39	1.28	1.19	1.10	1.02
	VPE	240+	4 x FC8-165	10	1.74	1.61	1.49	1.39	1.29	1.21	1.13	1.06	3.75	3.02	2.72	2.47	2.25	2.06	1.89	1.74	1.61	1.49	1.39
1.2	VPM2	190+	4 x FC8-165	11	-	-	-	-	-	-	-	-	-	1.90	1.72	1.56	1.42	1.30	1.19	1.10	1.02	0.94	0.88
	VPH2	190	4 x FC8-165	12	1.10	1.02	0.94	0.88	0.82	0.76	0.71	0.67	2.47	1.90	1.72	1.56	1.42	1.30	1.19	1.10	1.02	0.94	0.88
	VPH2	240+	4 x FC8-165	13	1.50	1.39	1.28	1.19	1.11	1.04	0.97	0.91	3.44	2.59	2.34	2.12	1.93	1.77	1.63	1.50	1.39	1.28	1.19
	VPE	190	4 x FC8-165	14	1.10	1.02	0.94	0.88	0.82	0.76	0.71	0.67	2.47	1.90	1.72	1.56	1.42	1.30	1.19	1.10	1.02	0.94	0.88
	VPE	240+	4 x FC8-165	15	1.50	1.39	1.28	1.19	1.11	1.04	0.97	0.91	3.44	2.59	2.34	2.12	1.93	1.77	1.63	1.50	1.39	1.28	1.19

1. LOADING CLASS: Refer to Page 211 of this Manual for the scope of the Loading Class designations.
2. FASTENER DESIGNATIONS: beginning with 'F' are part numbers for fasteners supplied by UNEX eg. FC8-165: FC = Coach Screw Stainless Steel. 8 = 8mm diameter, 165 = length in mm; Substitution with other fasteners is not permitted.
3. HEIGHT 'H': is the overall height of the balustrade above the substrate level shown. Interpolate for Heights between those shown.
4. DESIGN WIND SPEED: in m/s, Refer to Pages 63 to 64 for details of applicable wind codes and the methods for determining the Design Wind Speed.

WET TIMBER - SIDE FIXING, SCREWS, 135MM EDGE JOIST

Refer to all notes on Pages 81 and 82 which shall apply to this specification and the relevant pages in Chapter 5 Installation Guides. Refer also to Chapter 2 for the Style Specification.

APS2 & APE2 POST TYPES ONLY

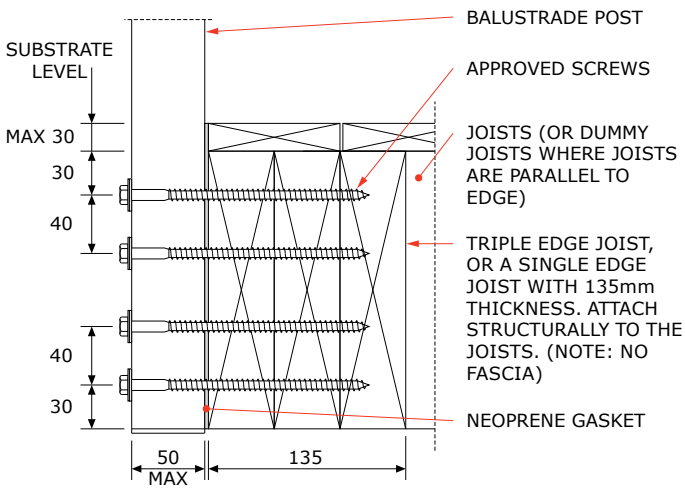

1. For details of approved fasteners refer to Note 3 on Page 81.
2. The post spacings shown are based on the fixing screws having Fully Developed Thread - FDT (i.e. excluding the unthreaded shank) engaging for the full embedment of the screw. This will exist if the balustrade post is attached directly to the timber joist with no fascia or cladding between (except for the neoprene gasket). Sizes of Pass holes in the posts shall not exceed screw diameter plus 1mm.
3. Washers to be fitted under screw and bolt heads shall be as follows
   - For 8mm fasteners - washer supplied with fasteners.
4. Substrate design including waterproofing and the structural design of the timber substrate and its connections are not included in this specification and must be carried out by others.
5. Important, the FC8-165 coachscrews in this specification are to be used with the "**Sika Supergrip 2 Hour**" adhesive system (TASG).

MAXIMUM POST CENTRES 'S max' (metres)

ALWAYS TAKE THE LESSER OF THE VALUE BELOW AND THE VALUE FROM THE STYLE SPECIFICATION

Height[3]	Post Type	Joist Size	Fasteners - Qty and Type[2]	Line No.	LOADING CLASS[1]																		
					N07C/N07R								N03R	Not Preventing Falls									
					Design Wind Speed[4]									Design Wind Speed[4]									
					VH		EH							M			H			VH		EH	
					50	52	54	56	58	60	62	64	1	38	40	42	44	46	48	50	52	54	56
1.0	APS2	190	4 x FC8-165	1	1.38	1.38	1.30	1.21	1.13	1.05	0.99	0.93	2.96	2.63	2.37	2.15	1.96	1.79	1.65	1.52	1.40	1.30	1.21
	APS2	240+	4 x FC8-165	2	1.93	1.90	1.76	1.64	1.52	1.42	1.33	1.25	4.13	3.55	3.21	2.91	2.65	2.42	2.23	2.05	1.90	1.76	1.64
	APE2	190	4 x FC8-165	3	1.38	1.38	1.30	1.21	1.13	1.05	0.99	0.93	2.96	2.63	2.37	2.15	1.96	1.79	1.65	1.52	1.40	1.30	1.21
	APE2	240+	4 x FC8-165	4	1.93	1.90	1.76	1.64	1.52	1.42	1.33	1.25	4.13	3.55	3.21	2.91	2.65	2.42	2.23	2.05	1.90	1.76	1.64
1.1	APS2	190	4 x FC8-165	6	1.26	1.19	1.10	1.02	0.95	0.89	0.83	0.78	2.69	2.22	2.00	1.82	1.66	1.51	1.39	1.28	1.19	1.10	1.02
	APS2	240+	4 x FC8-165	7	1.74	1.61	1.49	1.39	1.29	1.21	1.13	1.06	3.75	3.02	2.72	2.47	2.25	2.06	1.89	1.74	1.61	1.49	1.39
	APE2	190	4 x FC8-165	8	1.26	1.19	1.10	1.02	0.95	0.89	0.83	0.78	2.69	2.22	2.00	1.82	1.66	1.51	1.39	1.28	1.19	1.10	1.02
	APE2	240+	4 x FC8-165	9	1.74	1.61	1.49	1.39	1.29	1.21	1.13	1.06	3.75	3.02	2.72	2.47	2.25	2.06	1.89	1.74	1.61	1.49	1.39
1.2	APS2	190	4 x FC8-165	11	1.10	1.02	0.94	0.88	0.82	0.76	0.71	0.67	2.47	1.90	1.72	1.56	1.42	1.30	1.19	1.10	1.02	0.94	0.88
	APS2	240+	4 x FC8-165	12	1.50	1.39	1.28	1.19	1.11	1.04	0.97	0.91	3.44	2.59	2.34	2.12	1.93	1.77	1.63	1.50	1.39	1.28	1.19
	APE2	190	4 x FC8-165	13	1.10	1.02	0.94	0.88	0.82	0.76	0.71	0.67	2.47	1.90	1.72	1.56	1.42	1.30	1.19	1.10	1.02	0.94	0.88
	APE2	240+	4 x FC8-165	14	1.50	1.39	1.28	1.19	1.11	1.04	0.97	0.91	3.44	2.59	2.34	2.12	1.93	1.77	1.63	1.50	1.39	1.28	1.19

1. LOADING CLASS: Refer to Page 211 of this Manual for the scope of the Loading Class designations.
2. FASTENER DESIGNATIONS: beginning with 'F' are part numbers for fasteners supplied by UNEX eg. FC8-165: FC = Coach Screw Stainless Steel. 8 = 8mm diameter, 165 = length in mm; Substitution with other fasteners is not permitted.
3. HEIGHT 'H': is the overall height of the balustrade above the substrate level shown. Interpolate for Heights between those shown.
4. DESIGN WIND SPEED: in m/s, Refer to Pages 63 to 64 for details of applicable wind codes and the methods for determining the Design Wind Speed.

WET TIMBER - SIDE FIXING, BOLTS

Refer to all notes on Pages 81 and 82 which shall apply to this specification and the relevant pages in Chapter 5 Installation Guides. Refer also to Chapter 2 for the Style Specification.

VPM2, VPH2 & VPE POST TYPES ONLY

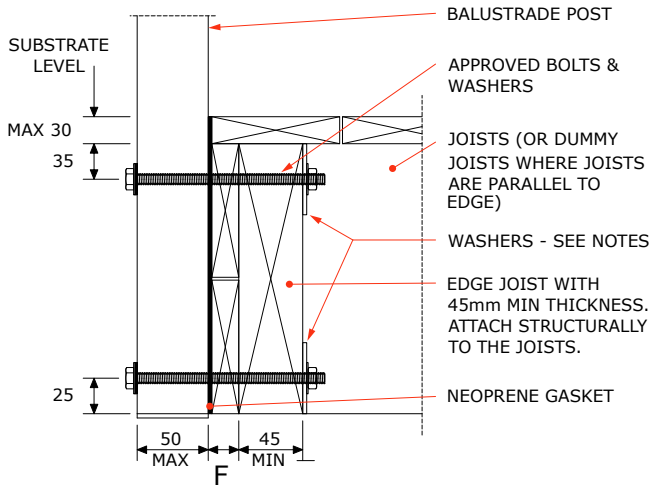

Note: VIH Stiffener required for VPH2, VPE Posts.
No stiffener required for VPM2 Post.
See page 146 for details.

1. For details of approved fasteners refer to Note 3 on Page 81.
2. Washers to be fitted under screw and bolt heads shall be as follows
   - For 8mm bolts - 22mm O.D. S/S washer (Part No. FW8-22) with a polymer washer (Part No. FWP8-22G) between the S/S and the aluminium.
   - For washers bearing against timber use 50 x 50 x 3mm stainless steel washers (Part No. FW10-50SQ).
3. Substrate design including waterproofing, the structural design of the timber members and their connections, is beyond the scope of this specification and must be carried out by others.
4. Spacings in Table below are based on Wet timber, using Pinus Radiata with an in-service moisture content that exceeds 18%, eg. exposed decks. For Dry timber, where the in-service moisture content is 18% or less, refer to specification FS.1S.06.01 on Page 98.
5. Substrate design including waterproofing and the structural design of the timber substrate and its connections are not included in this specification and must be carried out by others.

MAXIMUM POST CENTRES 'S max' (metres)

ALWAYS TAKE THE LESSER OF THE VALUE BELOW AND THE VALUE FROM THE STYLE SPECIFICATION

Height[3]	Post Type	Joist Size	Fasteners - Qty and Type[2]	Line No.	LOADING CLASS[1]																		
					N07C/N07R								N03R	Not Preventing Falls									
					Design Wind Speed[4]									Design Wind Speed[4]									
					VH		EH							M			H			VH		EH	
					50	52	54	56	58	60	62	64	1	38	40	42	44	46	48	50	52	54	56
1.0	VPH2	140	2 x M8 Bolts	1	0.78	0.78	0.77	0.71	0.66	0.62	0.59	0.59	1.67	1.55	1.40	1.27	1.15	1.06	0.97	0.89	0.83	0.77	0.71
	VPM2	190+	2 x M8 Bolts	2	0.78	0.78	0.77	0.71	0.66	0.62	0.59	0.59	1.67	1.55	1.40	1.27	1.15	1.06	0.97	0.89	0.83	0.77	0.71
	VPH2	190+	2 x M8 Bolts	3	1.24	1.24	1.19	1.11	1.04	0.97	0.91	0.85	2.65	2.41	2.18	1.97	1.80	1.65	1.51	1.39	1.29	1.19	1.11
	VPE	190+	2 x M8 Bolts	4	1.24	1.24	1.19	1.11	1.04	0.97	0.91	0.85	2.65	2.41	2.18	1.97	1.80	1.65	1.51	1.39	1.29	1.19	1.11
1.1	VPH2	140	2 x M8 Bolts	5	0.71	0.69	0.64	0.60	0.59	0.59	0.59	0.59	1.52	1.30	1.17	1.06	0.97	0.89	0.81	0.75	0.69	0.64	0.60
	VPM2	190+	2 x M8 Bolts	6	-	-	-	-	-	-	-	-	-	1.30	1.17	1.06	0.97	0.89	0.81	0.75	0.69	0.64	0.60
	VPH2	190+	2 x M8 Bolts	7	1.13	1.08	1.01	0.93	0.87	0.81	0.76	0.72	2.41	2.03	1.83	1.66	1.51	1.39	1.27	1.17	1.08	1.01	0.93
	VPE	190+	2 x M8 Bolts	8	1.13	1.08	1.01	0.93	0.87	0.81	0.76	0.72	2.41	2.03	1.83	1.66	1.51	1.39	1.27	1.17	1.08	1.01	0.93
1.2	VPH2	140	2 x M8 Bolts	9	-	-	-	-	-	-	-	-	1.39	1.10	1.00	0.90	0.82	0.75	0.69	0.64	0.59	0.59	0.59
	VPM2	190+	2 x M8 Bolts	10	-	-	-	-	-	-	-	-	-	1.10	1.00	0.90	0.82	0.75	0.69	0.64	0.59	0.59	0.59
	VPH2	190+	2 x M8 Bolts	11	1.00	0.93	0.86	0.80	0.74	0.70	0.65	0.61	2.21	1.73	1.56	1.42	1.29	1.18	1.09	1.00	0.93	0.86	0.80
	VPE	190+	2 x M8 Bolts	12	1.00	0.93	0.86	0.80	0.74	0.70	0.65	0.61	2.21	1.73	1.56	1.42	1.29	1.18	1.09	1.00	0.93	0.86	0.80

1. LOADING CLASS: Refer to Page 211 of this Manual for the scope of the Loading Class designations.
2. FASTENER DESIGNATIONS: M8 Bolts in the table refer to UNEX Part No's FB8 bolts (Class 70 Stainless Steel), bolts may be substituted with FE8 (M8) Threaded Studs made from 316 Stainless Steel.
3. HEIGHT 'H': is the overall height of the balustrade above the substrate level shown. Interpolate for Heights between those shown.
4. DESIGN WIND SPEED: in m/s, Refer to Pages 63 to 64 for details of applicable wind codes and the methods for determining the Design Wind Speed.

WET TIMBER - SIDE FIXING, BOLTS

Refer to all notes on Pages 81 and 82 which shall apply to this specification and the relevant pages in Chapter 5 Installation Guides. Refer also to Chapter 2 for the Style Specification.

APS2 & APE2 POST TYPES ONLY

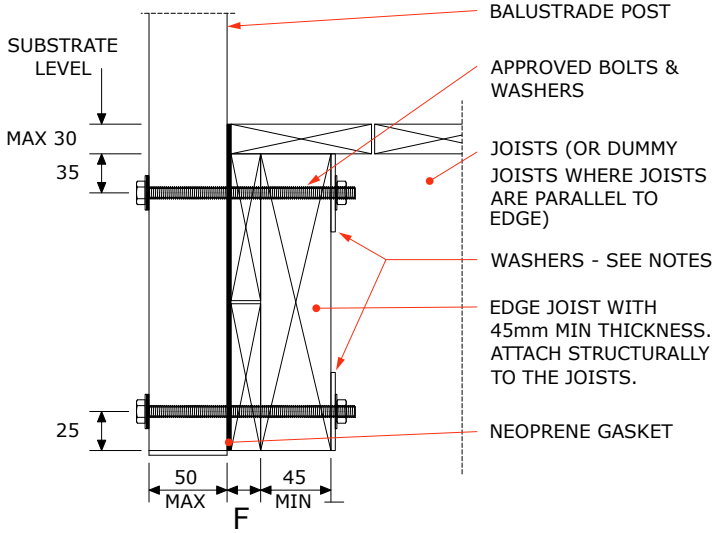

1. For details of approved fasteners refer to Note 3 on Page 81.
2. Washers to be fitted under screw and bolt heads shall be as follows
   - For 8mm bolts - 22mm O.D. S/S washer (Part No. FW8-22) with a polymer washer (Part No. FWP8-22G) between the S/S and the aluminium.
   - For washers bearing against timber use 50 x 50 x 3mm stainless steel washers (Part No. FW10-50SQ).
3. Substrate design including waterproofing, the structural design of the timber members and their connections, is beyond the scope of this specification and must be carried out by others.
4. Spacings in Table below are based on Wet timber, using Pinus Radiata with an in-service moisture content that exceeds 18%, eg. exposed decks. For Dry timber, where the in-service moisture content is 18% or less, refer to specification FS.1S.06.03 on Page 99.
5. Substrate design including waterproofing and the structural design of the timber substrate and its connections are not included in this specification and must be carried out by others.

MAXIMUM POST CENTRES 'S max' (metres)

ALWAYS TAKE THE LESSER OF THE VALUE BELOW AND THE VALUE FROM THE STYLE SPECIFICATION

Height[3]	Post Type	Joist Size	Fasteners - Qty and Type[2]	Line No.	LOADING CLASS[1]																		
					N07C/N07R								N03R	Not Preventing Falls									
					Design Wind Speed[4]									Design Wind Speed[4]									
					VH		EH							M			H			VH		EH	
					50	52	54	56	58	60	62	64	1	38	40	42	44	46	48	50	52	54	56
1.0	APE2	140	2 x M8 Bolts	1	0.78	0.78	0.77	0.71	0.66	0.62	0.59	0.59	2.49	1.55	1.40	1.27	1.15	1.06	0.97	0.89	0.83	0.77	0.71
	APS2	190	2 x M8 Bolts	2	1.24	1.24	1.19	1.11	1.04	0.97	0.91	0.85	2.49	2.41	2.18	1.97	1.80	1.65	1.51	1.39	1.29	1.19	1.11
	APS2	190+	2 x M8 Bolts	3	1.24	1.24	1.19	1.11	1.04	0.97	0.91	0.85	2.49	2.41	2.18	1.97	1.80	1.65	1.51	1.39	1.29	1.19	1.11
	APE2	240+	2 x M8 Bolts	4	1.68	1.68	1.59	1.48	1.38	1.29	1.21	1.13	2.49	3.21	2.90	2.63	2.40	2.19	2.01	1.86	1.72	1.59	1.48
1.1	APE2	140	2 x M8 Bolts	5	0.71	0.69	0.64	0.60	0.59	0.59	0.59	0.59	2.49	1.30	1.17	1.06	0.97	0.89	0.81	0.75	0.69	0.64	0.60
	APS2	190	2 x M8 Bolts	6	1.14	1.08	1.01	0.93	0.87	0.81	0.76	0.72	2.49	2.03	1.83	1.66	1.51	1.39	1.27	1.17	1.08	1.01	0.93
	APS2	190+	2 x M8 Bolts	7	1.14	1.08	1.01	0.93	0.87	0.81	0.76	0.72	2.49	2.03	1.83	1.66	1.51	1.39	1.27	1.17	1.08	1.01	0.93
	APE2	240+	2 x M8 Bolts	8	1.54	1.45	1.34	1.25	1.16	1.09	1.02	0.96	2.49	2.71	2.45	2.22	2.02	1.85	1.70	1.57	1.45	1.34	1.25
1.2	APE2	140	2 x M8 Bolts	10	0.64	0.59	0.59	0.59	0.59	0.59	0.59	0.59	2.49	1.10	1.00	0.90	0.82	0.75	0.69	0.64	0.59	0.59	0.59
	APS2	190	2 x M8 Bolts	11	1.00	0.93	0.86	0.80	0.74	0.70	0.65	0.61	2.49	1.73	1.56	1.42	1.29	1.18	1.09	1.00	0.93	0.86	0.80
	APS2	190+	2 x M8 Bolts	11	1.00	0.93	0.86	0.80	0.74	0.70	0.65	0.61	2.49	1.73	1.56	1.42	1.29	1.18	1.09	1.00	0.93	0.86	0.80
	APE2	240+	2 x M8 Bolts	12	1.34	1.24	1.15	1.07	1.00	0.93	0.87	0.82	2.49	2.32	2.09	1.90	1.73	1.58	1.45	1.34	1.24	1.15	1.07

1. LOADING CLASS: Refer to Page 211 of this Manual for the scope of the Loading Class designations.
2. FASTENER DESIGNATIONS: M8 Bolts in the table refer to UNEX Part No's FB8 bolts (Class 70 Stainless Steel), bolts may be substituted with FE8 (M8) Threaded Studs made from 316 Stainless Steel.
3. HEIGHT 'H': is the overall height of the balustrade above the substrate level shown. Interpolate for Heights between those shown.
4. DESIGN WIND SPEED: in m/s, Refer to Pages 63 to 64 for details of applicable wind codes and the methods for determining the Design Wind Speed.

NOTES FOR FIXING TO CONCRETE AND MASONRY SUBSTRATES

The following notes refer to Specifications Top Fixing and Side Fixing posts to Concrete and Concrete Masonry substrates.

1. GENERAL

Tables in Section 4 give the maximum post spacings permitted by the strength of the baseplate to substrate connection of Top Fixed posts. Section 3 gives the maximum post spacing permitted governed by the strength of the posts and rails. The maximum post spacing permitted is the LESSER of the spacings tabulated in Section 3 and Section 4.

2. LOADING CLASS

Refer to Page 211 for a description of the various Loading Class designations.

3. FASTENERS

Fasteners shall be manufactured from 316 stainless steel and be supplied by UNEX. They are identified in the tables by their UNEX Part Number. Refer to Catalogue Section 1 eg. - FE8-105: FE = Threaded Stud Stainless Steel; 8 = 8mm diameter; 105 = length in mm.

All studs shell be threaded 316 stainless steel (S/S) with an ultimate tensile stress of not less than 560 MPa and all bolts shall be strength Class 70 with an ultimate tensile stress of not less than 700 MPa.

If using the Epoxy anchoring method, the stud length required can be calculated using the following allowances: -

- FE8 studs (top mounted) - allow 23mm total for an FN8D nut, FW8-22 washer, FWP8-22G polymer washer, and 12mm thick baseplate.
- FE8 studs (Side mounted) - allow 61mm total for an FN8D nut, FW8-22 washer, FWP8-22G polymer washer, SG42-12 neoprene gasket, and 50mm thick post.
- FE10 studs (top mounted) - allow 25mm total for an FN10D nut, FW10-21 washer, FWP10-22G polymer washer, and 12mm thick baseplate.
- FE10 studs (Side mounted) - allow 63mm total for an FN10D nut, FW10-21 washer, FWP10-22G polymer washer, SG42-12 neoprene gasket, and 50mm thick post.

Add to this allowance the thickness of any topping (e.g. plaster, tiles, bedding, etc) and packers, plus the 'd' dimension as shown in the table of the relevant fixing specification, to get the minimum total stud length required.

Where baseplates fix directly on to structural concrete (i.e. no toppings etc are present),this will work out to the following standard stud sizes: -

- FE8 - with 80mm embedment use FE8-105
- FE10 - with 90mm embedment use FE10-115

4. HEIGHT

Height 'H' is the overall height of the balustrade above the substrate level shown. Interpolate for eights between those shown.

5. DESIGN WIND SPEED

Design Wind Speeds are ultimate limit state wind speeds. Guidance on how this may be determined for any site is given on Pages 63 to 64. M, H, VH, and EH indicate Medium, High, Very High, and Extremely High Wind Zones from NZS 3604:2011. Interpolate between wind speeds shown. For Loading Class N07C/N07R and N03R refer to AS/NZS 1170:2002 for determining Wind Speeds.

(continued on following Page)

NOTES FOR FIXING TO CONCRETE AND MASONRY SUBSTRATES - (CONT'D)

6. BASEPLATES AND EPOXY ANCHORING

Baseplates shall be attached to the posts as per Page 182 and fixed to the concrete substrate, as illustrated. FE studs as described in Note 3 above, shall be installed and anchored into concrete using the Epoxy Ramset Epcon C6EF system in accordance with the manufacturers instructions. Refer also to instructions in Chapter 5 of this manual.

7. FABRICATION AND INSTALLATION

Fabrication and Installation are to be in accordance with the other Sections of this Manual and where applicable, comply with the relevant requirements of the NZ Building Code.

8. SUBSTRATE DESIGN

Substrate Design including waterproofing and structural design of the concrete and masonry supporting substrate including reinforcement is beyond the scope of this specification and must be carried out by others.

9. CONCRETE

Concrete shall have a minimum 28 day crushing strength of 20MPa.

10. CONCRETE MASONRY

Masonry units shall comply with AS/NZS 4455 with a typical concrete strength of 12 MPa. All masonry units supporting balustrades shall be filled completely with 17.5MPa concrete infill and be adequately reinforced to resist the balustrade loads.

All fixing must be anchored into the infill concrete for the depths shown. Fixings that pass partly through the web of the masonry unit must pass right through the masonry unit and be anchored with a 50 x 50 x 3mm S/S washer and nut on the far side.

Top fixing is not allowed on walls less then 190mm wide.

Concrete specification DO NOT apply to AAC (Autoclaved Aerated Concrete) cladding panels. Contact UNEX for a Site-Specific PS1 in this instance.

11. GENERAL NOTES ON STEEL SUBSTRATES

Fasteners shall be manufactured from 316 stainless steel and be supplied by UNEX. They are identified in the drawings by their UNEX Part Number. All bolts shall be 316 stainless steel (S/S), strength Class 70, with an ultimate tensile stress of not less than 700 MPa.

Substrate Design including waterproofing and structural design of the steel supporting substrate including reinforcement is beyond the scope of this specification and must be carried out by others.

Any holes drilled into steel shall have a protective coating applied to prevent corrosion. Consult a specialist for advice on the type of coating required.

Any and all aluminium shall be separated from steel using TSS90 tape, or neoprene gaskets, for the entire area in contact.

CONCRETE - TOP FIXING, EPOXY-SET ANCHORS, 65MM CRS

Refer to all notes on Pages 102 and 103 which shall apply to this specification and the relevant pages in Chapter 5 Installation Guides. Refer also to Chapter 2 for the Style Specification.

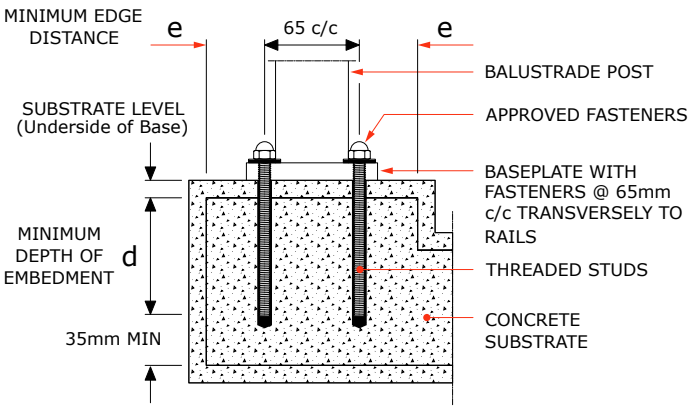

d = MINIMUM DEPTH OF EMBEDMENT INTO STRUCTURAL CONCRETE

e = MINIMUM DISTANCE FROM EDGE OF STRUCTURAL CONCRETE

1. For details of approved fasteners refer to Page 102 note 3. All threaded studs shall have a minimum ultimate tensile stress of 560 MPa.
2. Washers to be fitted under all stud dome nuts as follows
   - For 8mm studs - 22mm O.D. S/S washer (Part No. FW8-22) with a polymer washer (Part No. FWP8-22G) between the S/S and the aluminium.
   - For 10mm studs - 21mm O.D. S/S washer (Part No. FW10-21) with a polymer washer (Part No. FWP10-22G) between the S/S and the aluminium.
3. For details of anchoring studs to the substrate refer to Page 102 note 6.
4. Substrate design, including waterproofing, is beyond the scope of this specification and shall be carried out by others. Concrete shall have a 28 day Compressive Strength of 20MPa or more (as required for substrate design) and be adequately reinforced.

MAXIMUM POST CENTRES 'S max' (metres)

ALWAYS TAKE THE LESSER OF THE VALUE BELOW AND THE VALUE FROM THE STYLE SPECIFICATION

Height[3]	Baseplate Size D x W	Fasteners - Qty and Type[2]	'e' (See dia-gram)	'd' (See dia-gram)	Line No.	LOADING CLASS[1]																	
						N07C/N07R								N03R	Not Preventing Falls								
						Design Wind Speed[4]									Design Wind Speed[4]								
						VH		EH							M			H			VH		EH
						50	52	54	56	58	60	62	64		38	40	42	44	46	48	50	52	54	56
1.0	90x90	2 x M8	40	80	1	1.25	1.25	1.25	1.25	1.16	1.09	1.02	0.95	2.68	2.71	2.44	2.22	2.02	1.85	1.70	1.56	1.45	1.34	1.25
	90x115	2 x M10	40	90	2	1.43	1.43	1.43	1.43	1.33	1.24	1.16	1.09	3.07	3.10	2.80	2.54	2.31	2.11	1.94	1.79	1.65	1.53	1.43
1.1	90x90	2 x M8	40	80	3	1.14	1.14	1.11	1.03	0.96	0.90	0.84	0.79	2.44	2.24	2.02	1.83	1.67	1.53	1.40	1.29	1.19	1.11	1.03
	90x115	2 x M10	40	90	4	1.30	1.30	1.27	1.18	1.10	1.03	0.96	0.90	2.79	2.56	2.31	2.10	1.91	1.75	1.61	1.48	1.37	1.27	1.18
1.2	90x90	2 x M8	40	80	5	1.04	1.00	0.93	0.87	0.81	0.75	0.71	0.66	2.23	1.88	1.70	1.54	1.40	1.28	1.18	1.09	1.00	0.93	0.87
	90x115	2 x M10	40	90	6	1.19	1.15	1.07	0.99	0.92	0.86	0.81	0.76	2.56	2.15	1.94	1.76	1.61	1.47	1.35	1.24	1.15	1.07	0.99

1. LOADING CLASS: Refer to Page 211 of this Manual for the scope of the Loading Class designations.
2. FASTENER DESIGNATIONS: M8 and M10 Fasteners in the table refer to UNEX Part No's FE8 and FE10 Threaded Studs.
3. HEIGHT 'H': is the overall height of the balustrade above the substrate level shown. Interpolate for Heights between those shown.
4. DESIGN WIND SPEED: in m/s, Refer to Pages 63 to 64 for details of applicable wind codes and the methods for determining the Design Wind Speed.

CONCRETE - TOP FIXING, EPOXY-SET ANCHORS, 90MM CRS

Refer to all notes on Pages 102 and 103 which shall apply to this specification and the relevant pages in Chapter 5 Installation Guides. Refer also to Chapter 2 for the Style Specification.

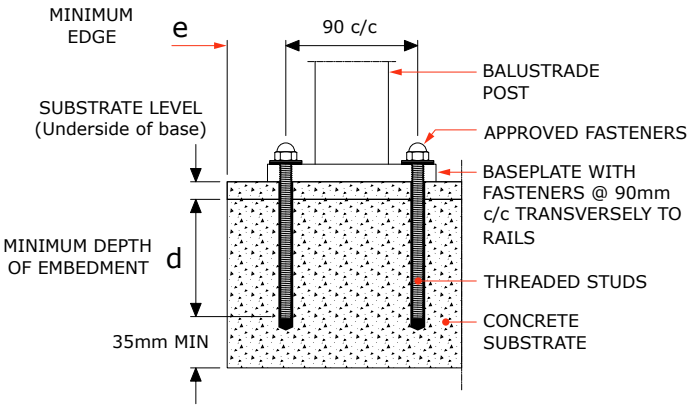

d = MINIMUM DEPTH OF EMBEDMENT INTO STRUCTURAL CONCRETE

e = MINIMUM DISTANCE FROM EDGE OF STRUCTURAL CONCRETE

1. For details of approved fasteners refer to Page 102 note 3. All threaded studs shall have a minimum ultimate tensile stress of 560 MPa.
2. Approved fasteners shall be epoxied into the concrete substrate as shown using EPCON C6 Plus Epoxy.
3. Washers to be fitted under all stud dome nuts as follows
   - For 8mm studs - 22mm O.D. S/S washer (Part No. FW8-22) with a polymer washer (Part No. FWP8-22G) between the S/S and the aluminium.
   - For 10mm studs - 21mm O.D. S/S washer (Part No. FW10-21) with a polymer washer (Part No. FWP10-22G) between the S/S and the aluminium.
4. For details of anchoring studs to the substrate refer to Page 102 note 6.
5. Substrate design, including waterproofing, is beyond the scope of this specification and shall be carried out by others. Concrete shall have a 28 day Compressive Strength of 20MPa or more (as required for substrate design) and be adequately reinforced.

MAXIMUM POST CENTRES 'S max' (metres)

ALWAYS TAKE THE LESSER OF THE VALUE BELOW AND THE VALUE FROM THE STYLE SPECIFICATION

Height[3]	Baseplate Size D x W	Fasteners - Qty and Type[2]	'e' (See dia-gram)	'd' (See dia-gram)	Line No.	LOADING CLASS[1]																			
						N07C/N07R								N03R	Not Preventing Falls										
						Design Wind Speed[4]									Design Wind Speed[4]										
						VH		EH							M			H			VH			EH	
						50	52	54	56	58	60	62	64		38	40	42	44	46	48	50	52	54	56
1.0	115X90	2 x M8	40	80	1	0.77	0.77	0.77	0.77	0.71	0.67	0.62	0.59	1.65	1.66	1.50	1.36	1.24	1.13	1.04	0.96	0.89	0.82	0.77
	115X90	2 x M10	40	90	2	1.00	1.00	1.00	1.00	0.93	0.87	0.82	0.77	2.15	2.17	1.96	1.78	1.62	1.48	1.36	1.26	1.16	1.08	1.00
	115X105	4 x M8	40	80	3	1.43	1.43	1.43	1.43	1.33	1.24	1.16	1.09	3.07	3.10	2.80	2.54	2.31	2.12	1.94	1.79	1.66	1.54	1.43
	115X105	4 x M10	40	90	4	1.74	1.74	1.74	1.74	1.62	1.51	1.42	1.33	3.35	3.78	3.41	3.09	2.82	2.58	2.37	2.18	2.02	1.87	1.74
1.1	115X90	2 x M8	40	80	5	0.70	0.70	0.68	0.63	0.59	0.55	0.52	0.48	1.50	1.37	1.24	1.12	1.02	0.94	0.86	0.79	0.73	0.68	0.63
	115X90	2 x M10	40	90	6	0.91	0.91	0.89	0.83	0.77	0.72	0.67	0.63	1.96	1.80	1.62	1.47	1.34	1.23	1.13	1.04	0.96	0.89	0.83
	115X105	4 x M8	40	80	7	1.30	1.30	1.27	1.18	1.10	1.03	0.96	0.90	2.79	2.56	2.31	2.10	1.91	1.75	1.61	1.48	1.37	1.27	1.18
	115X105	4 x M10	40	90	8	1.59	1.59	1.54	1.44	1.34	1.25	1.17	1.10	3.05	3.12	2.82	2.55	2.33	2.13	1.96	1.80	1.67	1.54	1.44
1.2	115X90	2 x M8	40	80	9	0.64	0.62	0.57	0.53	0.50	0.46	0.43	0.41	1.37	1.15	1.04	0.95	0.86	0.79	0.72	0.67	0.62	0.57	0.53
	115X90	2 x M10	40	90	10	0.84	0.81	0.75	0.69	0.65	0.61	0.57	0.53	1.79	1.51	1.36	1.24	1.13	1.03	0.95	0.87	0.81	0.75	0.69
	115X105	4 x M8	40	80	11	1.19	1.15	1.07	0.99	0.92	0.86	0.81	0.76	2.56	2.15	1.94	1.76	1.61	1.47	1.35	1.24	1.15	1.07	0.99
	115X105	4 x M10	40	90	12	1.45	1.40	1.30	1.21	1.13	1.05	0.98	0.92	2.79	2.62	2.37	2.15	1.96	1.79	1.64	1.51	1.40	1.30	1.21

1. LOADING CLASS: Refer to Page 211 of this Manual for the scope of the Loading Class designations.
2. FASTENER DESIGNATIONS: M8 and M10 Fasteners in the table refer to UNEX Part No's FE8 and FE10 Threaded Studs.
3. HEIGHT 'H': is the overall height of the balustrade above the substrate level shown. Interpolate for Heights between those shown.
4. DESIGN WIND SPEED: in m/s, Refer to Pages 63 to 64 for details of applicable wind codes and the methods for determining the Design Wind Speed.

CONCRETE - SIDE FIXING, EPOXY-SET ANCHORS

Refer to all notes on Pages 102 and 103 which shall apply to this specification and the relevant pages in Chapter 5 Installation Guides. Refer also to Chapter 2 for the Style Specification.

VPH2 & VPE POST TYPES ONLY

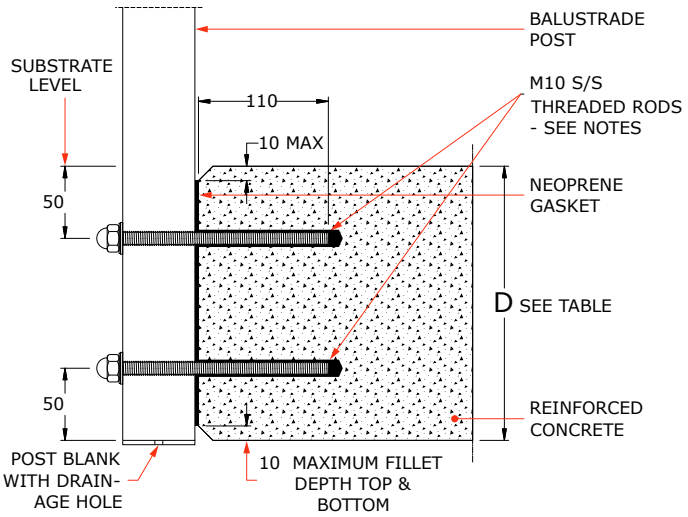

Note: VIH Stiffener required for VPH2, VPE Posts.
No stiffener required for VPM2 Post.
See page 146 for details.

1. Fixings shall be 10mm diameter 316 stainless steel threaded rod epoxied into the concrete substrate as shown using EPCON C6 Plus Epoxy.
2. Washers to be fitted under all stud dome nuts as follows
   - For 10mm studs - 21mm O.D. S/S washer (Part No. FW10-21) with a polymer washer (Part No. FWP10-22G) between the S/S and the aluminium.
3. A neoprene adhesive gasket shall be fixed to the post to prevent contact between the concrete and the aluminium post. Part No. SG36-12 for 40mm wide posts, SG42-12 for 50mm wide posts and SG50-12 for 60mm wide posts.
4. For details of anchoring studs to the substrate refer to Page 102 note 6.
5. Substrate design, including waterproofing, is beyond the scope of this specification and shall be carried out by others. Concrete shall have a 28 day Compressive Strength of 20MPa or more (as required for substrate design) and be adequately reinforced.

MAXIMUM POST CENTRES 'S max' (metres)

ALWAYS TAKE THE LESSER OF THE VALUE BELOW AND THE VALUE FROM THE STYLE SPECIFICATION

Height[2]	Post Type	'D' (See diagram)	Line No.	LOADING CLASS[1]																		
				N07C/N07R								N03R	Not Preventing Falls									
				Design Wind Speed[3]									Design Wind Speed[3]									
				VH		EH							M			H			VH		EH	
				50	52	54	56	58	60	62	64	N/A	38	40	42	44	46	48	50	52	54	56
1.0	VPH2	150	1	0.62	0.62	0.62	0.61	0.57	0.54	0.50	0.47	1.32	1.33	1.20	1.09	0.99	0.91	0.84	0.77	0.71	0.66	0.61
		170	2	0.86	0.86	0.86	0.86	0.80	0.75	0.70	0.66	1.85	1.87	1.69	1.53	1.39	1.27	1.17	1.08	1.00	0.92	0.86
		190	3	1.11	1.11	1.11	1.11	1.03	0.96	0.90	0.85	2.38	2.40	2.17	1.97	1.79	1.64	1.50	1.39	1.28	1.19	1.11
	VPE	150	4	0.62	0.62	0.62	0.61	0.57	0.54	0.50	0.47	1.32	1.33	1.20	1.09	0.99	0.91	0.84	0.77	0.71	0.66	0.61
		170	5	0.86	0.86	0.86	0.86	0.80	0.75	0.70	0.66	1.85	1.87	1.69	1.53	1.39	1.27	1.17	1.08	1.00	0.92	0.86
		190	6	1.11	1.11	1.11	1.11	1.03	0.96	0.90	0.85	2.38	2.40	2.17	1.97	1.79	1.64	1.50	1.39	1.28	1.19	1.11
1.1	VPH2	150	7	0.56	0.56	0.55	0.51	0.47	0.44	0.41	0.39	1.20	1.10	0.99	0.90	0.82	0.75	0.69	0.64	0.59	0.55	0.51
		170	8	0.78	0.78	0.76	0.71	0.66	0.62	0.58	0.54	1.68	1.54	1.39	1.26	1.15	1.05	0.97	0.89	0.82	0.76	0.71
		190	9	1.01	1.01	0.98	0.91	0.85	0.80	0.75	0.70	2.16	1.98	1.79	1.62	1.48	1.35	1.24	1.15	1.06	0.98	0.91
	VPE	150	10	0.56	0.56	0.55	0.51	0.47	0.44	0.41	0.39	1.20	1.10	0.99	0.90	0.82	0.75	0.69	0.64	0.59	0.55	0.51
		170	11	0.78	0.78	0.76	0.71	0.66	0.62	0.58	0.54	1.68	1.54	1.39	1.26	1.15	1.05	0.97	0.89	0.82	0.76	0.71
		190	12	1.01	1.01	0.98	0.91	0.85	0.80	0.75	0.70	2.16	1.98	1.79	1.62	1.48	1.35	1.24	1.15	1.06	0.98	0.91
1.2	VPH2	150	13	0.51	0.49	0.46	0.43	0.40	0.37	0.35	0.33	1.10	0.93	0.84	0.76	0.69	0.63	0.58	0.54	0.49	0.46	0.43
		170	14	0.72	0.69	0.64	0.60	0.56	0.52	0.49	0.46	1.54	1.30	1.17	1.06	0.97	0.89	0.81	0.75	0.69	0.64	0.60
		190	15	0.92	0.89	0.83	0.77	0.72	0.67	0.63	0.59	1.98	1.67	1.50	1.36	1.24	1.14	1.05	0.96	0.89	0.83	0.77
	VPE	150	16	0.51	0.49	0.46	0.43	0.40	0.37	0.35	0.33	1.10	0.93	0.84	0.76	0.69	0.63	0.58	0.54	0.49	0.46	0.43
		170	17	0.72	0.69	0.64	0.60	0.56	0.52	0.49	0.46	1.54	1.30	1.17	1.06	0.97	0.89	0.81	0.75	0.69	0.64	0.60
		190	18	0.92	0.89	0.83	0.77	0.72	0.67	0.63	0.59	1.98	1.67	1.50	1.36	1.24	1.14	1.05	0.96	0.89	0.83	0.77

1. LOADING CLASS: Refer to Page 211 of this Manual for the scope of the Loading Class designations.
2. HEIGHT 'H': is the overall height of the balustrade above the substrate level shown. Interpolate for Heights between those shown.
3. DESIGN WIND SPEED: in m/s, Refer to Pages 60 to 61 for details of applicable wind codes and the methods for determining the Design Wind Speed.

CONCRETE - SIDE FIXING, EPOXY-SET ANCHORS

Refer to all notes on Pages 102 and 103 which shall apply to this specification and the relevant pages in Chapter 5 Installation Guides. Refer also to Chapter 2 for the Style Specification.

APS2 & APE2 POST TYPES ONLY

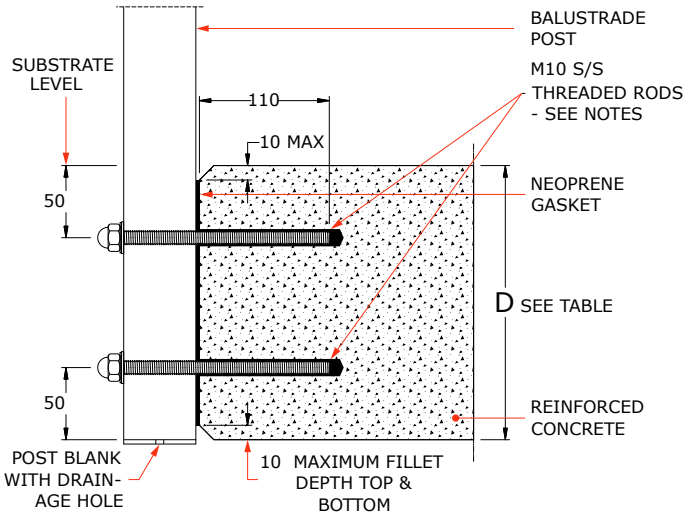

1. Fixings shall be 10mm diameter 316 stainless steel threaded rod epoxied into the concrete substrate as shown using EPCON C6 Plus Epoxy.
2. Washers to be fitted under all stud dome nuts as follows
   - For 10mm studs - 21mm O.D. S/S washer (Part No. FW10-21) with a polymer washer (Part No. FWP10-22G) between the S/S and the aluminium.
3. A neoprene adhesive gasket shall be fixed to the post to prevent contact between the concrete and the aluminium post. Part No. SG36-12 for 40mm wide posts, SG42-12 for 50mm wide posts and SG50-12 for 60mm wide posts.
4. For details of anchoring studs to the substrate refer to Page 102 note 6.
5. Substrate design, including waterproofing, is beyond the scope of this specification and shall be carried out by others. Concrete shall have a 28 day Compressive Strength of 20MPa or more (as required for substrate design) and be adequately reinforced.

MAXIMUM POST CENTRES 'S max' (metres)

ALWAYS TAKE THE LESSER OF THE VALUE BELOW AND THE VALUE FROM THE STYLE SPECIFICATION

Height[2]	Post Type	'D' (See diagram)	Line No.	LOADING CLASS[1]																		
				N07C/N07R								N03R	Not Preventing Falls									
				Design Wind Speed[3]									Design Wind Speed[3]									
				VH		EH							M			H			VH		EH	
				50	52	54	56	58	60	62	64	N/A	38	40	42	44	46	48	50	52	54	56
1.0	APS2	150	1	0.90	0.90	0.90	0.90	0.84	0.78	0.74	0.69	1.54	1.96	1.77	1.60	1.46	1.34	1.23	1.13	1.04	0.97	0.90
		170	2	1.23	1.23	1.23	1.23	1.14	1.07	1.00	0.94	1.54	2.64	2.40	2.18	1.99	1.82	1.67	1.54	1.42	1.32	1.23
		190	3	1.23	1.23	1.23	1.23	1.14	1.07	1.00	0.94	1.54	2.64	2.40	2.18	1.99	1.82	1.67	1.54	1.42	1.32	1.23
	APE2	150	4	0.90	0.90	0.90	0.90	0.84	0.78	0.74	0.69	1.94	1.96	1.77	1.60	1.46	1.34	1.23	1.13	1.04	0.97	0.90
		170	5	1.27	1.27	1.27	1.26	1.18	1.10	1.03	0.97	1.99	2.74	2.47	2.24	2.04	1.87	1.72	1.58	1.46	1.36	1.26
		190	6	1.59	1.59	1.59	1.59	1.48	1.38	1.29	1.21	1.99	3.41	3.11	2.82	2.57	2.35	2.16	1.99	1.84	1.71	1.59
1.1	APS2	150	7	0.82	0.82	0.80	0.74	0.69	0.65	0.61	0.57	1.37	1.62	1.46	1.32	1.21	1.10	1.01	0.93	0.86	0.80	0.74
		170	8	1.10	1.10	1.07	0.99	0.93	0.86	0.81	0.76	1.37	2.16	1.95	1.76	1.61	1.47	1.35	1.25	1.15	1.07	0.99
		190	9	1.10	1.10	1.07	0.99	0.93	0.86	0.81	0.76	1.37	2.16	1.95	1.76	1.61	1.47	1.35	1.25	1.15	1.07	0.99
	APE2	150	10	0.82	0.82	0.80	0.74	0.69	0.65	0.61	0.57	1.76	1.62	1.46	1.32	1.21	1.10	1.01	0.93	0.86	0.80	0.74
		170	11	1.15	1.15	1.12	1.04	0.97	0.91	0.85	0.80	1.78	2.26	2.04	1.85	1.69	1.55	1.42	1.31	1.21	1.12	1.04
		190	12	1.42	1.42	1.38	1.29	1.20	1.12	1.05	0.99	1.78	2.80	2.52	2.29	2.09	1.91	1.75	1.62	1.49	1.38	1.29
1.2	APS2	150	13	0.75	0.73	0.67	0.63	0.58	0.55	0.51	0.48	1.23	1.36	1.23	1.11	1.01	0.93	0.85	0.78	0.73	0.67	0.63
		170	14	0.98	0.95	0.88	0.82	0.76	0.71	0.67	0.63	1.23	1.77	1.60	1.45	1.32	1.21	1.11	1.02	0.95	0.88	0.82
		190	15	0.98	0.95	0.88	0.82	0.76	0.71	0.67	0.63	1.23	1.77	1.60	1.45	1.32	1.21	1.11	1.02	0.95	0.88	0.82
	APE2	150	16	0.75	0.73	0.67	0.63	0.58	0.55	0.51	0.48	1.60	1.36	1.23	1.11	1.01	0.93	0.85	0.78	0.73	0.67	0.63
		170	17	1.05	1.02	0.94	0.88	0.82	0.76	0.71	0.67	1.60	1.90	1.72	1.56	1.42	1.30	1.19	1.10	1.02	0.94	0.88
		190	18	1.28	1.23	1.14	1.06	0.99	0.93	0.87	0.81	1.60	2.31	2.08	1.89	1.72	1.57	1.45	1.33	1.23	1.14	1.06

1. LOADING CLASS: Refer to Page 211 of this Manual for the scope of the Loading Class designations.
2. HEIGHT 'H': is the overall height of the balustrade above the substrate level shown. Interpolate for Heights between those shown.
3. DESIGN WIND SPEED: in m/s, Refer to Pages 60 to 61 for details of applicable wind codes and the methods for determining the Design Wind Speed.

CONCRETE - DKG2 FIXING, EPOXY-SET ANCHORS

This specification for fixing UNEX balustrades to certain concrete substrates where a face gutter is also required. It applies to balustrade styles using VPH2 or VPE posts only. A separate specification must be referred to for the required balustrade style.

VPH2 & VPE POST TYPES ONLY

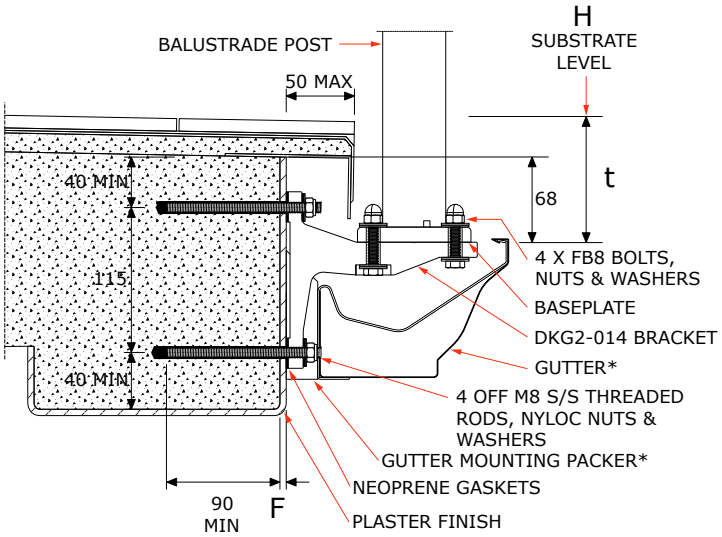

*Gutter and associated clips flashings and packers are not supplied by the UNEX Systems or the balustrade installer. Additional flashings may be required for water deflection in some cases. Gutter profile illustrated is "150mm O/G" from "Continuous Spouting", for more information on supplier visit www.cspout.co.nz. Other gutter profiles may be used. We do not recommend using copper gutters with this detail.

1. The DKG2-014 brackets are required to be installed before the gutter and drip edge.
2. The VPH2 or VPE balustrade posts are attached to the BSMF baseplate and DKG2 bracket as illustrated on page 176.
3. Fixings shall be 8mm diameter 316 stainless steel threaded rod epoxied into the concrete substrate as shown using EPCON C6 Plus Epoxy.
4. Washers to be fitted under all stud Nyloc nuts as follows
   - For 8mm studs - 22mm O.D. S/S washer (Part No. FW8-22) with a polymer washer (Part No. FWP8-22G) between the S/S and the aluminium.
5. A neoprene adhesive gasket shall be fixed to the DKG2-014 bracket to prevent contact between the concrete and the aluminium bracket (Part No. SG24-12).
6. For details of anchoring studs to the substrate refer to General Notes Page 102 note 6.
7. Substrate design, including water-proofing, is beyond the scope of this specification and shall be carried out by others. Concrete shall have a 28 day Compressive Strength of 20MPa or more (as required for substrate design) and be adequately reinforced.

MAXIMUM POST CENTRES 'S max' (metres)

ALWAYS TAKE THE LESSER OF THE VALUE BELOW AND THE VALUE FROM THE STYLE SPECIFICATION

Height(3)	't' (See dia-gram)	Post Type	Fasteners -Qty and Type(2)	'F' (See dia-gram)	Line No.	LOADING CLASS(1)																	
						N07C/N07R								N03R	Not Preventing Falls								
						Design Wind Speed(4)									Design Wind Speed(4)								
						VH			EH						M			H			VH		EH
						50	52	54	56	58	60	62	64	N/A	38	40	42	44	46	48	50	52	54	56
1.0	100	VPH2	4 x M8	14-60	1	1.06	1.03	0.96	0.89	0.83	0.78	0.73	0.68	2.26	1.93	1.74	1.58	1.44	1.32	1.21	1.12	1.03	1.03	1.03
	100	VPE	4 x M8	14-60	2	1.06	1.03	0.96	0.89	0.83	0.78	0.73	0.68	2.26	1.93	1.74	1.58	1.44	1.32	1.21	1.12	1.03	1.03	1.03
	150	VPH2	4 x M8	14-60	3	1.01	0.95	0.88	0.82	0.77	-	-	-	2.16	1.78	1.61	1.46	1.33	1.22	1.12	1.03	0.95	0.95	0.95
	150	VPE	4 x M8	14-60	4	1.01	0.95	0.88	0.82	0.77	0.72	0.67	-	2.16	1.78	1.61	1.46	1.33	1.22	1.12	1.03	0.95	0.95	0.95
	200	VPE	4 x M8	14-60	5	0.96	0.88	0.82	0.76	0.71	-	-	-	2.07	1.66	1.49	1.36	1.24	1.13	1.04	0.96	0.88	0.88	0.88
	250	VPE	4 x M8	14-60	6	0.89	0.83	0.77	-	-	-	-	-	1.99	1.55	1.40	1.27	1.15	1.05	0.97	0.89	0.83	0.83	-
	300	VPE	4 x M8	14-60	7	0.84	-	-	-	-	-	-	-	1.91	1.45	1.31	1.19	1.08	0.99	0.91	0.84	-	-	-
	350	VPE	4 x M8	14-60	9	-	-	-	-	-	-	-	-	1.84	1.36	1.23	1.12	1.02	0.93	-	-	-	-	-

1. LOADING CLASS: Refer to Page 211 of this Manual for the scope of the Loading Class designations.
2. FASTENER DESIGNATIONS: beginning with 'F' are part numbers for fasteners supplied by UNEX eg. FC8-165: FC = Coach Screw Stainless Steel. 8 = 8mm diameter, 165 = length(mm) ; 4 x FC8-165 fasteners may be substituted with 4 x M8 bolts (Class 70 Stainless Steel); Substitution with other fasteners is not permitted.
3. HEIGHT 'H': is the overall height of the balustrade above the substrate level shown. Interpolate for Heights between those shown.
4. DESIGN WIND SPEED: in m/s, Refer to Pages 60 to 61 for details of applicable wind codes and the methods for determining the Design Wind Speed.

CONCRETE - DKG2 FIXING, EPOXY-SET ANCHORS

This specification for fixing UNEX balustrades to certain concrete substrates where a face gutter is also required. It applies to balustrade styles using APS2 or APE2 posts only. A separate specification must be referred to for the required balustrade style.

APS2 & APE2 POST TYPES ONLY

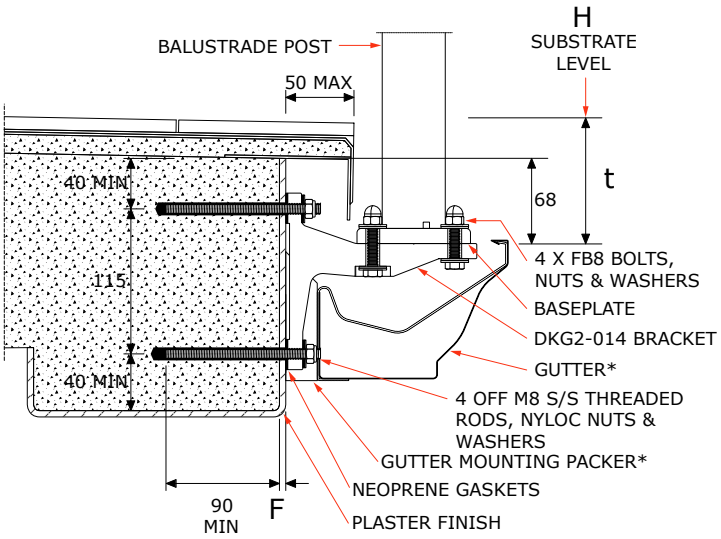

*Gutter and associated clips flashings and packers are not supplied by the UNEX Systems or the balustrade installer. Additional flashings may be required for water deflection in some cases. Gutter profile illustrated is "150mm O/G" from "Continuous Spouting", for more information on supplier visit www.cspout.co.nz. Other gutter profiles may be used. We do not recommend using copper gutters with this detail.

1. The DKG2-014 brackets are required to be installed before the gutter and drip edge.
2. The APS2 or APE2 balustrade posts are attached to the BSMF or BEMF baseplate and DKG2-014 bracket as illustrated on page 176.
3. Fixings shall be 8mm diameter 316 stainless steel threaded rod epoxied into the concrete substrate as shown using EPCON C6 Plus Epoxy.
4. Washers to be fitted under all stud Nyloc nuts as follows
   - For 8mm studs - 22mm O.D. S/S washer (Part No. FW8-22) with a polymer washer (Part No. FWP8-22G) between the S/S and the aluminium.
5. A neoprene adhesive gasket shall be fixed to the DKG2-014 bracket to prevent contact between the concrete and the aluminium bracket (Part No. SG24-12).
6. For details of anchoring studs to the substrate refer to General Notes Page 102 note 6.
7. Substrate design, including water-proofing, is beyond the scope of this specification and shall be carried out by others. Concrete shall have a 28 day Compressive Strength of 20MPa or more (as required for substrate design) and be adequately reinforced.

MAXIMUM POST CENTRES 'S max' (metres)

ALWAYS TAKE THE LESSER OF THE VALUE BELOW AND THE VALUE FROM THE STYLE SPECIFICATION

Height[3]	't' (See dia-gram)	Post Type	Fasteners -Qty and Type(2)	'F' (See dia-gram)	Line No.	LOADING CLASS[1]																		
						N07C/N07R								N03R	Not Preventing Falls									
						Design Wind Speed[4]									Design Wind Speed[4]									
						VH		EH							M			H			VH		EH	
						50	52	54	56	58	60	62	64	N/A	38	40	42	44	46	48	50	52	54	56
1.0	100	APS2	4 x M8	14-60	1	1.06	1.03	0.96	0.89	0.83	0.78	0.73	0.68	2.26	1.93	1.74	1.58	1.44	1.32	1.21	1.12	1.03	1.03	1.03
	100	APE2	4 x M8	14-60	2	1.28	1.25	1.16	1.08	1.01	0.94	0.88	0.83	2.75	2.35	2.12	1.92	1.75	1.60	1.47	1.36	1.25	1.25	1.25
	150	APS2	4 x M8	14-60	3	1.01	0.95	0.88	0.82	0.77	0.72	0.67	-	2.16	1.78	1.61	1.46	1.33	1.22	1.12	1.03	0.95	0.95	0.95
	150	APE2	4 x M8	14-60	4	1.23	1.16	1.07	1.00	0.93	0.87	0.81	0.76	2.63	2.17	1.96	1.77	1.62	1.48	1.36	1.25	1.16	1.16	1.16
	200	APE2	4 x M8	14-60	5	1.16	1.07	1.00	0.93	0.86	0.81	0.76	-	2.52	2.01	1.82	1.65	1.50	1.37	1.26	1.16	1.07	1.07	1.07
	250	APE2	4 x M8	14-60	6	1.08	1.00	0.93	0.86	0.81	-	-	-	2.42	1.88	1.70	1.54	1.40	1.28	1.18	1.08	1.00	1.00	1.00
	300	APE2	4 x M8	14-60	7	1.02	0.94	0.87	-	-	-	-	-	2.32	1.76	1.59	1.44	1.31	1.20	1.10	1.02	0.94	0.94	-
	350	APE2	4 x M8	14-60	9	-	-	-	-	-	-	-	-	2.24	1.66	1.50	1.36	1.24	1.13	1.04	0.96	-	-	-

1. LOADING CLASS: Refer to Page 211 of this Manual for the scope of the Loading Class designations.
2. FASTENER DESIGNATIONS: beginning with 'F' are part numbers for fasteners supplied by UNEX eg. FC8-165: FC = Coach Screw Stainless Steel. 8 = 8mm diameter, 165 = length(mm) ; 4 x FC8-165 fasteners may be substituted with 4 x M8 bolts (Class 70 Stainless Steel); Substitution with other fasteners is not permitted.
3. HEIGHT 'H': is the overall height of the balustrade above the substrate level shown. Interpolate for Heights between those shown.
4. DESIGN WIND SPEED: in m/s, Refer to Pages 60 to 61 for details of applicable wind codes and the methods for determining the Design Wind Speed.

CONCRETE - POST BUILT INTO

Refer to all notes on Pages 102 and 103 which shall apply to this specification and the relevant pages in Chapter 5 Installation Guides. Refer also to Chapter 2 for the Style Specification.

VPM2, VPH2 & VPE POST TYPES ONLY

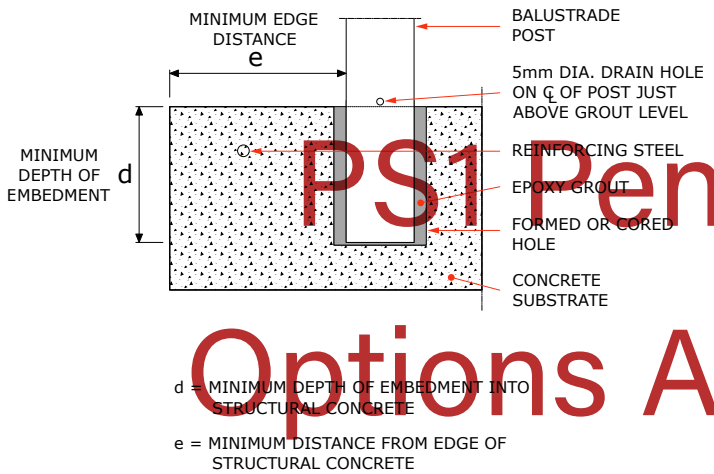

1. Form or core holes in the substrate to receive the posts with sufficient space allowance for grouting all around the post.
2. After the posts have been temporarily secured in their final position, grout in position with a pourable epoxy grout as shown. Maintain all temporary securing devices in position until the grout has reached a compressive stress of 10 MPa.
3. All embedment depths given in this manual assume the concrete has 28 day crushing strength of 25 MPa. For 20 MPa concrete, decrease the post spacing by 5% or increase the depth of embedment by 5%.
4. The required edge distance 'e' will vary with the post spacing, the concrete strength and the reinforcement in the deck edge. A recommendation for each job should be obtained from the building designer. Where this cannot be obtained or the reinforcing details are unknown use 'e' = 130mm.
5. Required minimum depth of embedment 'd' is shown in the Table below.
6. Substrate design, including waterproofing, is beyond the scope of this specification and shall be carried out by others.

PS1 Pending
Options Available.
Please confirm with
UNEX: tech@Unex.co.nz

CONCRETE - POST BUILT INTO

Refer to all notes on Pages 102 and 103 which shall apply to this specification and the relevant pages in Chapter 5 Installation Guides. Refer also to Chapter 2 for the Style Specification.

APS2 & APE2 POST TYPES ONLY

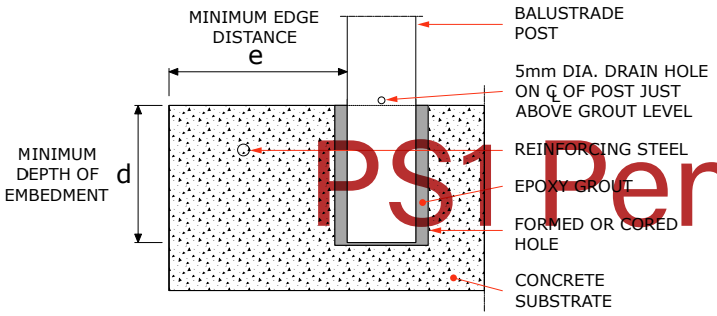

d = MINIMUM DEPTH OF EMBEDMENT INTO STRUCTURAL CONCRETE

e = MINIMUM DISTANCE FROM EDGE OF STRUCTURAL CONCRETE

1. Form or core holes in the substrate to receive the posts with sufficient space allowance for grouting all around the post.
2. After the posts have been temporarily secured in their final position, grout in position with a pourable epoxy grout as shown. Maintain all temporary securing devices in position until the grout has reached a compressive stress of 10 MPa.
3. All embedment depths given in this manual assume the concrete has 28 day crushing strength of 25 MPa. For 20 MPa concrete, decrease the post spacing by 5% or increase the depth of embedment by 5%.
4. The required edge distance 'e' will vary with the post spacing, the concrete strength and the reinforcement in the deck edge. A recommendation for each job should be obtained from the building designer. Where this cannot be obtained or the reinforcing details are unknown use 'e' = 130mm.
5. Required minimum depth of embedment 'd' is shown in the Table below.
6. Substrate design, including waterproofing, is beyond the scope of this specification and shall be carried out by others.

PS1 Pending
Options Available.
Please confirm with
UNEX: tech@Unex.co.nz

MASONRY - TOP FIXING, EPOXY-SET ANCHORS, 65MM CRS

Refer to all notes on Pages 111 and 112 which shall apply to this specification and the relevant pages in Chapter 5 Installation Guides. Refer also to Chapter 2 for the Style Specification.

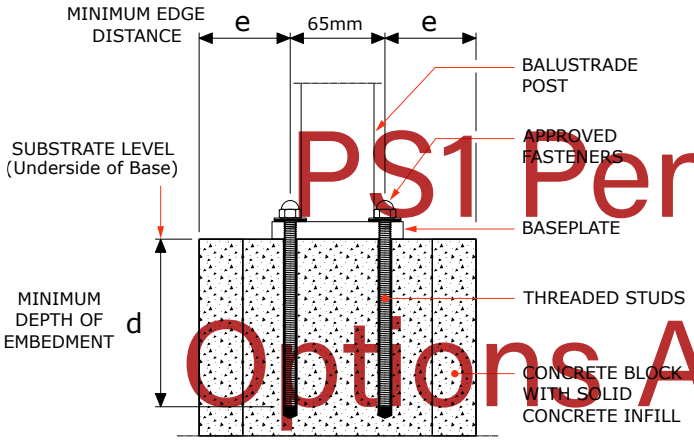

1. For details of approved fasteners refer to General Notes on Page 111 note 3. All threaded studs shall have a minimum ultimate tensile stress of 560 MPa.
2. Washers to be fitted under all stud dome nuts as follows
   - For 8mm studs - 22mm O.D. S/S washer (Part No. FW8-22) with a polymer washer (Part No. FWP8-22G) between the S/S and the aluminium.
   - For 10mm studs - 21mm O.D. S/S washer (Part No. FW10-21) with a polymer washer (Part No. FWP10-22G) between the S/S and the aluminium.
3. For details of anchoring studs to the substrate refer to General Notes Page 102 note 6.
4. Substrate design, including waterproofing, is beyond the scope of this specification and shall be carried out by others. Infill Concrete shall have a 28 day Compressive Strength of 17.5MPa or more (as required for substrate design). Refer also to General Notes on Page 102 note 10.

PS1 Pending - Options Available.
Please confirm with
UNEX: tech@Unex.co.nz

MASONRY - TOP FIXING, EPOXY-SET ANCHORS, 90MM CRS

Refer to all notes on Pages 102 and 103 which shall apply to this specification and the relevant pages in Chapter 5 Installation Guides. Refer also to Chapter 2 for the Style Specification.

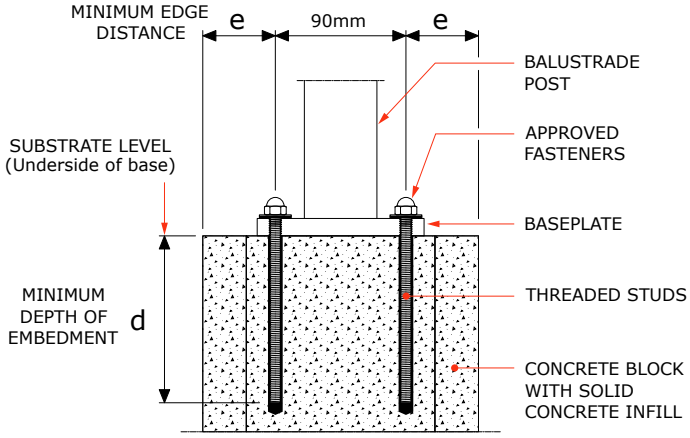

1. For details of approved fasteners refer to Note 3 on Page 102. All threaded studs shall have a minimum ultimate tensile stress of 560 MPa.
2. Approved fasteners shall be epoxied into the concrete substrate as shown using EPCON C6 Plus Epoxy.
3. Washers to be fitted under all stud dome nuts as follows
   - For 8mm studs - 22mm O.D. S/S washer (Part No. FW8-22) with a polymer washer (Part No. FWP8-22G) between the S/S and the aluminium.
   - For 10mm studs - 21mm O.D. S/S washer (Part No. FW10-21) with a polymer washer (Part No. FWP10-22G) between the S/S and the aluminium.
4. For details of anchoring studs to the substrate refer to General Notes Page 102 note 6.
5. Substrate design, including waterproofing, is beyond the scope of this specification and shall be carried out by others. Infill Concrete shall have a 28 day Compressive Strength of 20MPa or more (as required for substrate design). Refer also to General Notes on Page 109 note 10.

MAXIMUM POST CENTRES 'S max' (metres)

ALWAYS TAKE THE LESSER OF THE VALUE BELOW AND THE VALUE FROM THE STYLE SPECIFICATION

Height[3]	Baseplate Size D x W	Fasteners - Qty and Type[2]	'e' (See diagram)	'd' (See diagram)	Line No.	LOADING CLASS[1]																		
						N07C/N07R								N03R	Not Preventing Falls									
						Design Wind Speed[4]									Design Wind Speed[4]									
						VH			EH						M			H			VH			EH
						50	52	54	56	58	60	62	64		38	40	42	44	46	48	50	52	54	56
1.0	90x115	2 x M8	50	115	1	0.92	0.92	0.92	0.91	0.85	0.80	0.75	0.70	1.96	1.98	1.79	1.62	1.48	1.35	1.24	1.15	1.06	0.98	0.91
		2 x M10	50	115	2	1.17	1.17	1.17	1.17	1.09	1.02	0.95	0.90	2.52	2.54	2.29	2.08	1.90	1.73	1.59	1.47	1.36	1.26	1.17
	105x115	4 x M8	50	115	3	1.71	1.71	1.71	1.70	1.59	1.48	1.39	1.30	3.66	3.70	3.34	3.03	2.76	2.52	2.32	2.14	1.98	1.83	1.70
		4 x M10	50	115	4	2.08	2.08	2.08	2.07	1.93	1.81	1.69	1.59	3.94	4.50	4.06	3.68	3.36	3.07	2.82	2.60	2.40	2.23	2.07
1.1	90x115	2 x M8	50	115	5	0.83	0.83	0.81	0.76	0.70	0.66	0.62	0.58	1.79	1.64	1.48	1.34	1.22	1.12	1.03	0.95	0.88	0.81	0.76
		2 x M10	50	115	6	1.07	1.07	1.04	0.97	0.90	0.84	0.79	0.74	2.29	2.10	1.90	1.72	1.57	1.43	1.32	1.21	1.12	1.04	0.97
	105x115	4 x M8	50	115	7	1.55	1.55	1.51	1.41	1.31	1.23	1.15	1.08	3.33	3.06	2.76	2.50	2.28	2.09	1.92	1.77	1.63	1.51	1.41
		4 x M10	50	115	8	1.89	1.89	1.84	1.71	1.60	1.49	1.40	1.31	3.58	3.72	3.36	3.05	2.77	2.54	2.33	2.15	1.99	1.84	1.71
1.2	90x115	2 x M8	50	115	9	0.76	0.74	0.68	0.63	0.59	0.55	0.52	0.49	1.64	1.38	1.24	1.13	1.03	0.94	0.86	0.80	0.74	0.68	0.63
		2 x M10	50	115	10	0.98	0.94	0.87	0.81	0.76	0.71	0.66	0.62	2.10	1.76	1.59	1.44	1.32	1.20	1.11	1.02	0.94	0.87	0.81
	105x115	4 x M8	50	115	11	1.42	1.37	1.27	1.18	1.10	1.03	0.97	0.91	3.05	2.57	2.32	2.10	1.92	1.75	1.61	1.48	1.37	1.27	1.18
		4 x M10	50	115	12	1.73	1.67	1.55	1.44	1.34	1.25	1.17	1.10	3.28	3.13	2.82	2.56	2.33	2.13	1.96	1.81	1.67	1.55	1.44

1. LOADING CLASS: Refer to Page 211 of this Manual for the scope of the Loading Class designations.
2. FASTENER DESIGNATIONS: beginning with 'F' are part numbers for fasteners supplied by UNEX eg. FC8-165: FC = Coach Screw Stainless Steel. 8 = 8mm diameter, 165 = length in mm; Substitution with other fasteners is not permitted.
3. HEIGHT 'H': is the overall height of the balustrade above the substrate level shown. Interpolate for Heights between those shown.
4. DESIGN WIND SPEED: in m/s, Refer to Pages 63 to 64 for details of applicable wind codes and the methods for determining the Design Wind Speed.

MASONRY - SIDE FIXING, EPOXY-SET ANCHORS

Refer to all notes on Pages 102 and 103 which shall apply to this specification and the relevant pages in Chapter 5 Installation Guides. Refer also to Chapter 2 for the Style Specification.

VPH2 & VPE POST TYPES ONLY

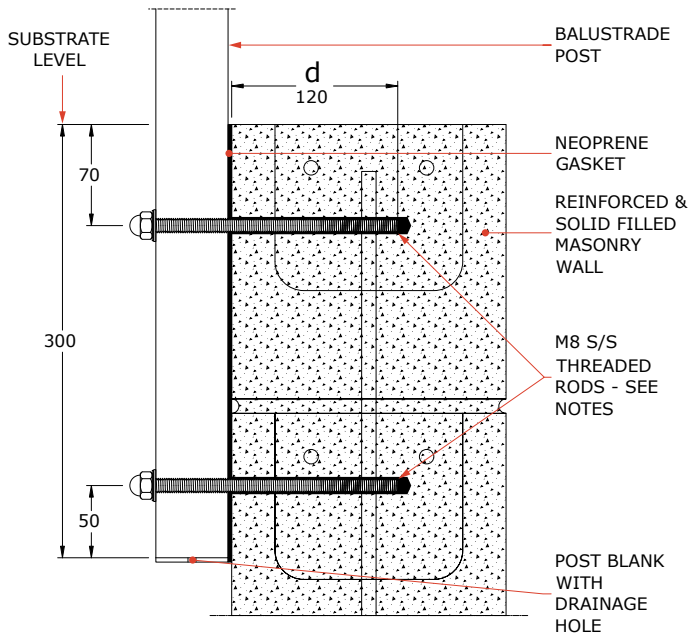

Note: VIH Stiffener required for VPH2, VPE Posts.
No stiffener required for VPM2 Post.
See page 146 for details.

1. Fixings shall be 8mm diameter 316 stainless steel threaded rod epoxied into the masonry wall as shown using EPCON C6 Plus Epoxy. The length of the rod shall be the sum of the embedment depth shown plus the post width, washers, neoprene gasket, and 8mm for the nut grip.
2. Washers to be fitted under all stud dome nuts as follows
   - For 8mm studs - 22mm O.D. S/S washer (Part No. FW8-22) with a polymer washer (Part No. FWP8-22G) between the S/S and the aluminium.
3. A neoprene adhesive gasket shall be fixed to the post to prevent contact between the masonry and the aluminium post. Part No. SG36-12 for 40mm wide posts, SG42-12 for 50mm wide posts and SG50-12 for 60mm wide posts.
4. For details of anchoring studs to the substrate refer to General Notes Page 102 note 6.
5. Substrate design, including waterproofing, is beyond the scope of this specification and shall be carried out by others. Infill Concrete shall have a 28 day Compressive Strength of 20MPa or more (as required for substrate design). Refer also to General Notes on Page 109 note 10.

MAXIMUM POST CENTRES 'S max' (metres)

ALWAYS TAKE THE LESSER OF THE VALUE BELOW AND THE VALUE FROM THE STYLE SPECIFICATION

Height(2)	Post Type	'D' (See diagram)	Line No.	LOADING CLASS(1)																		
				N07C/N07R								N03R	Not Preventing Falls									
				Design Wind Speed(3)									Design Wind Speed(3)									
				VH		EH							M			H			VH		EH	
				50	52	54	56	58	60	62	64	N/A	38	40	42	44	46	48	50	52	54	56
1.0	VPH2	120	1	1.08	1.08	1.08	1.08	1.08	1.08	1.08	1.08	2.32	2.32	2.32	2.32	2.32	2.32	2.32	2.23	2.06	1.91	1.77
	VPE	120	2	1.30	1.30	1.30	1.30	1.30	1.30	1.30	1.30	2.79	2.79	2.79	2.79	2.79	2.79	2.79	2.67	2.47	2.29	2.13
1.1	VPH2	120	3	1.00	1.00	1.00	1.00	1.00	1.00	1.00	1.00	2.13	2.13	2.13	2.13	2.13	2.09	1.92	1.77	1.63	1.51	1.41
	VPE	120	4	1.19	1.19	1.19	1.19	1.19	1.19	1.19	1.19	2.56	2.56	2.56	2.56	2.56	2.51	2.30	2.12	1.96	1.82	1.69
1.2	VPH2	120	5	0.92	0.92	0.92	0.92	0.92	0.92	0.92	0.88	1.97	1.97	1.97	1.97	1.86	1.70	1.56	1.44	1.33	1.23	1.15
	VPE	120	6	1.10	1.10	1.10	1.10	1.10	1.10	1.10	1.05	2.37	2.37	2.37	2.37	2.23	2.04	1.87	1.73	1.60	1.48	1.38

1. LOADING CLASS: Refer to Page 211 of this Manual for the scope of the Loading Class designations.
2. HEIGHT 'H': is the overall height of the balustrade above the substrate level shown. Interpolate for Heights between those shown.
3. DESIGN WIND SPEED: in m/s, Refer to Pages 60 to 61 for details of applicable wind codes and the methods for determining the Design Wind Speed.

MASONRY - SIDE FIXING, GLAZING POSTS, EPOXY-SET ANCHORS

Refer to all notes on Pages 102 and 103 which shall apply to this specification and the relevant pages in Chapter 5 Installation Guides. Refer also to Chapter 2 for the Style Specification.

APS2 & APE2 POST TYPES ONLY

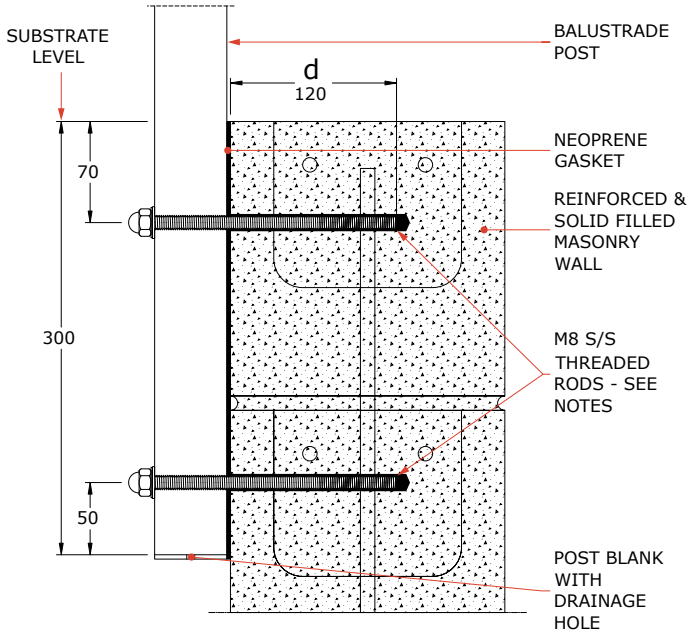

1. Fixings shall be 8mm diameter 316 stainless steel threaded rod epoxied into the masonry wall as shown using EPCON C6 Plus Epoxy. The length of the rod shall be the sum of the embedment depth shown plus the post width, washers, neoprene gasket, and 8mm for the nut grip.
2. Washers to be fitted under all stud dome nuts as follows
   - For 8mm studs - 22mm O.D. S/S washer (Part No. FW8-22) with a polymer washer (Part No. FWP8-22G) between the S/S and the aluminium.
3. A neoprene adhesive gasket shall be fixed to the post to prevent contact between the masonry and the aluminium post. Part No. SG36-12 for 40mm wide posts, SG42-12 for 50mm wide posts and SG50-12 for 60mm wide posts.
4. For details of anchoring studs to the substrate refer to General Notes Page 102 note 6.
5. Substrate design, including waterproofing, is beyond the scope of this specification and shall be carried out by others. Infill Concrete shall have a 28 day Compressive Strength of 20MPa or more (as required for substrate design). Refer also to General Notes on Page 109 note 10.

MAXIMUM POST CENTRES 'S max' (metres)

ALWAYS TAKE THE LESSER OF THE VALUE BELOW AND THE VALUE FROM THE STYLE SPECIFICATION

Height(2)	Post Type	'D' (See diagram)	Line No.	LOADING CLASS(1)																		
				N07C/N07R								N03R	Not Preventing Falls									
				Design Wind Speed(3)									Design Wind Speed(3)									
				VH		EH							M			H			VH		EH	
				50	52	54	56	58	60	62	64	N/A	38	40	42	44	46	48	50	52	54	56
1.0	APS2	120	1	1.29	1.29	1.29	1.29	1.29	1.29	1.29	1.29	2.76	2.76	2.76	2.76	2.76	2.72	2.50	2.30	2.13	1.97	1.83
	APE2	120	2	1.65	1.65	1.65	1.65	1.65	1.65	1.65	1.65	3.54	3.54	3.54	3.54	3.54	3.49	3.20	2.95	2.73	2.53	2.35
1.1	APS2	120	3	1.15	1.15	1.15	1.15	1.15	1.15	1.15	1.10	2.47	2.47	2.47	2.47	2.33	2.13	1.96	1.80	1.67	1.54	1.44
	APE2	120	4	1.48	1.48	1.48	1.48	1.48	1.48	1.48	1.42	3.18	3.18	3.18	3.18	2.99	2.74	2.52	2.32	2.14	1.99	1.85
1.2	APS2	120	5	1.04	1.04	1.04	1.04	1.04	1.00	0.94	0.88	2.08	2.23	2.23	2.05	1.87	1.71	1.57	1.45	1.34	1.24	1.15
	APE2	120	6	1.34	1.34	1.34	1.34	1.34	1.29	1.21	1.14	2.68	2.88	2.88	2.64	2.41	2.20	2.02	1.86	1.72	1.60	1.49

1. LOADING CLASS: Refer to Page 211 of this Manual for the scope of the Loading Class designations.
2. HEIGHT 'H': is the overall height of the balustrade above the substrate level shown. Interpolate for Heights between those shown.
3. DESIGN WIND SPEED: in m/s, Refer to Pages 60 to 61 for details of applicable wind codes and the methods for determining the Design Wind Speed.

STEEL - TOP FIXING, INLINE BOLTS, 75MM WIDE BASEPLATE

Refer to all notes on Pages 102 and 103 which shall apply to this specification and the relevant pages in Chapter 5 Installation Guides. Refer also to Chapter 2 for the Style Specification.

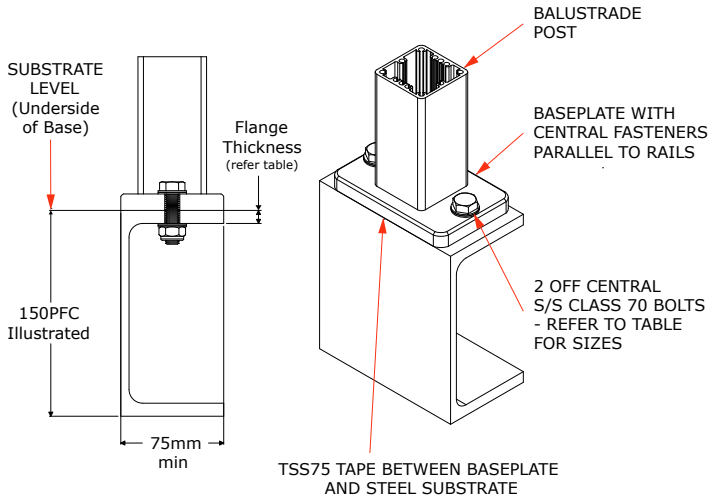

1. All bolts, washers and nyloc nuts fixings shall be Class 70 316 stainless steel.
2. Washers to be fitted under all bolts as follows;
   - For 10mm bolted - 21mm O.D. S/S washer (Part No. FW10-21) with a polymer washer (Part No. FWP10-22G) between the S/S washer, aluminium baseplate and the steel beam.
   - For 12mm tapped - 24mm O.D. S/S washer (Part No. FW12-24) with a polymer washer (Part No. FWP12-22W) between the S/S washer, aluminium baseplate and the steel beam.
3. The maximum post spacing permitted is the LESSER of the spacing tabulated in the Style Specification in Section 3 and spacing shown on the table below.
4. Substrate design, including waterproofing and the structural design of the steel substrate and its connections are not included in this specification and must be carried out by others.
5. Baseplate 75 x 115mm with 2 x Ø13mm inline fixing holes, at 90mm centres;
   BSHR baseplate for **50x50mm** posts
   BEHR baseplate for **50x60mm** posts
6. The steel beam shall be painted with a good quality paint system consisting of a primer and top coat.

MAXIMUM POST CENTRES 'S max' (metres)

ALWAYS TAKE THE LESSER OF THE VALUE BELOW AND THE VALUE FROM THE STYLE SPECIFICATION

Height[3]	Baseplate Size D x W	Fasteners - Qty and Type[2]	Flange Thick-ness (See diagram)	Line No.	LOADING CLASS[1]																			
					N07C/N07R								N03R	Not Preventing Falls										
					Design Wind Speed[4]									Design Wind Speed[4]										
					VH			EH						M			H			VH			EH	
					50	52	54	56	58	60	62	64		38	40	42	44	46	48	50	52	54	56
1.0	75x115	2 x M10 BOLTS	NA	1	1.39	1.39	1.39	1.39	1.29	1.21	1.13	1.06	2.85	3.01	2.72	2.47	2.25	2.06	1.89	1.74	1.61	1.49	1.39
		2 x M12 TAP	9	2	1.09	1.09	1.09	1.09	1.02	0.95	0.89	0.83	2.34	2.37	2.13	1.94	1.76	1.61	1.48	1.37	1.26	1.17	1.09
		2 x M12 TAP	11	3	1.34	1.34	1.34	1.33	1.24	1.16	1.09	1.02	2.85	2.89	2.61	2.37	2.16	1.97	1.81	1.67	1.54	1.43	1.33
		2 x M12 TAP	12	4	1.46	1.46	1.46	1.45	1.35	1.27	1.18	1.11	2.85	3.15	2.85	2.58	2.35	2.15	1.98	1.82	1.68	1.56	1.45
1.1	75x115	2 x M10 BOLTS	NA	5	1.27	1.27	1.23	1.15	1.07	1.00	0.94	0.88	2.59	2.49	2.25	2.04	1.86	1.70	1.56	1.44	1.33	1.23	1.15
		2 x M12 TAP	9	6	0.99	0.99	0.97	0.90	0.84	0.78	0.73	0.69	2.13	1.95	1.76	1.60	1.46	1.33	1.23	1.13	1.04	0.97	0.90
		2 x M12 TAP	11	7	1.21	1.21	1.18	1.10	1.03	0.96	0.90	0.84	2.59	2.39	2.16	1.96	1.78	1.63	1.50	1.38	1.28	1.18	1.10
		2 x M12 TAP	12	8	1.32	1.32	1.29	1.20	1.12	1.05	0.98	0.92	2.59	2.61	2.35	2.13	1.94	1.78	1.63	1.51	1.39	1.29	1.20
1.2	75x115	2 x M10 BOLTS	NA	9	1.16	1.12	1.04	0.96	0.90	0.84	0.79	0.74	2.38	2.09	1.89	1.71	1.56	1.43	1.31	1.21	1.12	1.04	0.96
		2 x M12 TAP	9	10	0.91	0.88	0.81	0.76	0.71	0.66	0.62	0.58	1.95	1.64	1.48	1.34	1.23	1.12	1.03	0.95	0.88	0.81	0.76
		2 x M12 TAP	11	11	1.11	1.07	0.99	0.92	0.86	0.81	0.75	0.71	2.38	2.01	1.81	1.64	1.50	1.37	1.26	1.16	1.07	0.99	0.92
		2 x M12 TAP	12	12	1.21	1.17	1.08	1.01	0.94	0.88	0.82	0.77	2.38	2.19	1.98	1.79	1.63	1.49	1.37	1.27	1.17	1.08	1.01

1. LOADING CLASS: Refer to Page 206 of this Manual for the scope of the Loading Class designations.
2. FASTENER DESIGNATIONS: M8 and M10 Fasteners in table refer to UNEX Part No's FB8 and FB10 bolts.
   "M8 Bolts" = bolted with washers and nyloc nuts. "M10 Tap" = bolts threaded into pre-tapped holes in the steel to good workmanship and threads completely smeared with lanoline grease.
3. HEIGHT 'H': is the overall height of the balustrade above the substrate level shown. Interpolate for Heights between those shown.
4. DESIGN WIND SPEED: in m/s, Refer to Pages 56 to 57 for details of applicable wind codes and the methods for determining the Design Wind Speed.

STEEL - TOP FIXING, INLINE BOLTS, 90MM WIDE BASEPLATE

Refer to all notes on Pages 102 and 103 which shall apply to this specification and the relevant pages in Chapter 5 Installation Guides. Refer also to Chapter 2 for the Style Specification.

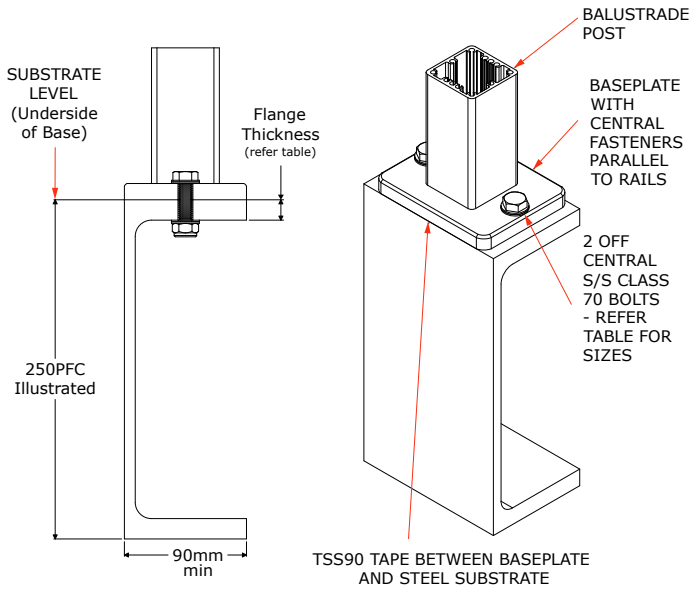

1. All bolts, washers and nyloc nuts fixings shall be Class 70 316 stainless steel.
2. Washers to be fitted under all bolts as follows;
   - For 10mm bolted - 21mm O.D. S/S washer (Part No. FW10-21) with a polymer washer (Part No. FWP10-22G) between the S/S washer, aluminium baseplate and the steel beam.
   - For 12mm tapped - 24mm O.D. S/S washer (Part No. FW12-24) with a polymer washer (Part No. FWP12-22W) between the S/S washer, aluminium baseplate and the steel beam.
3. The maximum post spacing permitted is the LESSER of the spacing tabulated in the Style Specification in Section 3 and spacing shown on the table below.
4. Substrate design, including waterproofing and the structural design of the steel substrate and its connections are not included in this specification and must be carried out by others.
5. Baseplate 90 x 115mm with 2 x Ø13mm inline fixing holes, at 90mm centres;
   BSMR baseplate for **50x50mm** posts
   BEMR baseplate for **50x60mm** posts
6. The steel beam shall be painted with a good quality paint system consisting of a primer and top coat.

MAXIMUM POST CENTRES 'S max' (metres)

ALWAYS TAKE THE LESSER OF THE VALUE BELOW AND THE VALUE FROM THE STYLE SPECIFICATION

Height[3]	Baseplate Size D x W	Fasteners - Qty and Type[2]	Flange Thick-ness (See diagram)	Line No.	LOADING CLASS[1]																		
					N07C/N07R								N03R	Not Preventing Falls									
					Design Wind Speed[4]									Design Wind Speed[4]									
					VH			EH						M			H			VH			EH
					50	52	54	56	58	60	62	64		38	40	42	44	46	48	50	52	54	56
1.0	90x115	2 x M10 BOLTS	NA	1	1.55	1.55	1.55	1.55	1.44	1.35	1.26	1.18	3.03	3.36	3.03	2.75	2.50	2.29	2.10	1.94	1.79	1.66	1.55
	90x115	2 x M12 TAP	9	2	1.08	1.08	1.08	1.08	1.01	0.94	0.88	0.83	2.32	2.35	2.12	1.92	1.75	1.60	1.47	1.36	1.25	1.16	1.08
	90x115	2 x M12 TAP	11	3	1.33	1.33	1.33	1.32	1.23	1.15	1.08	1.01	2.84	2.87	2.59	2.35	2.14	1.96	1.80	1.66	1.53	1.42	1.32
1.1	90x115	2 x M10 BOLTS	NA	4	1.41	1.41	1.37	1.28	1.19	1.11	1.04	0.98	2.75	2.77	2.50	2.27	2.07	1.89	1.74	1.60	1.48	1.37	1.28
	90x115	2 x M12 TAP	9	5	0.99	0.99	0.96	0.89	0.83	0.78	0.73	0.68	2.11	1.94	1.75	1.59	1.45	1.32	1.22	1.12	1.04	0.96	0.89
	90x115	2 x M12 TAP	11	6	1.20	1.20	1.17	1.09	1.02	0.95	0.89	0.84	2.58	2.37	2.14	1.94	1.77	1.62	1.49	1.37	1.27	1.17	1.09
1.2	90x115	2 x M10 BOLTS	NA	7	1.29	1.24	1.15	1.07	1.00	0.93	0.88	0.82	2.52	2.33	2.10	1.91	1.74	1.59	1.46	1.35	1.24	1.15	1.07
	90x115	2 x M12 TAP	9	8	0.90	0.87	0.81	0.75	0.70	0.65	0.61	0.57	1.94	1.63	1.47	1.33	1.22	1.11	1.02	0.94	0.87	0.81	0.75
	90x115	2 x M12 TAP	11	9	1.10	1.06	0.99	0.92	0.85	0.80	0.75	0.70	2.37	1.99	1.80	1.63	1.49	1.36	1.25	1.15	1.06	0.99	0.92

1. LOADING CLASS: Refer to Page 211 of this Manual for the scope of the Loading Class designations.
2. FASTENER DESIGNATIONS: M8 and M10 Fasteners in table refer to UNEX Part No's FB8 and FB10 bolts.
   "M8 Bolts" = bolted with washers and nyloc nuts. "M10 Tap" = bolts threaded into pre-tapped holes in the steel to good workmanship and threads completely smeared with lanoline grease.
3. HEIGHT 'H': is the overall height of the balustrade above the substrate level shown. Interpolate for Heights between those shown.
4. DESIGN WIND SPEED: in m/s, Refer to Pages 60 to 61 for details of applicable wind codes and the methods for determining the Design Wind Speed.

STEEL - TOP FIXING, BOLTS, 65MM CRS

Refer to all notes on Pages 102 and 103 which shall apply to this specification and the relevant pages in Chapter 5 Installation Guides. Refer also to Chapter 2 for the Style Specification.

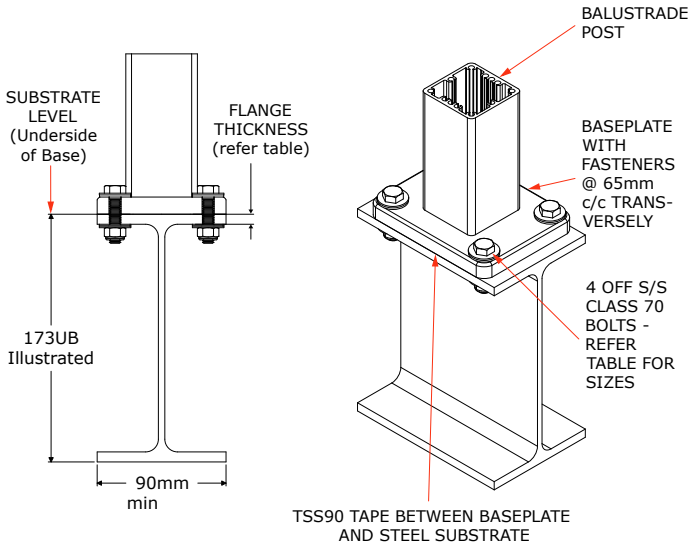

1. All bolts, washers and nyloc nuts fixings shall be Class 70 316 stainless steel.
2. Washers to be fitted under all bolts as follows;
   - For 8mm bolted - 22mm O.D. S/S washer (Part No. FW8-22) with a polymer washer (Part No. FWP8-22G) between the S/S washer, aluminium baseplate and the steel beam.
   - For 10mm tapped - 21mm O.D. S/S washer (Part No. FW10-21) with a polymer washer (Part No. FWP10-22G) between the S/S washer, aluminium baseplate and the steel beam.
3. The maximum post spacing permitted is the LESSER of the spacing tabulated in the Style Specification in Section 3 and spacing shown on the table below.
4. Substrate design, including waterproofing and the structural design of the steel substrate and its connections are not included in this specification and must be carried out by others.
5. Baseplate 90 x 115mm with 4 x Ø11mm fixing holes, at 65mm centres;
   BSMF baseplate for **50x50mm** posts
   BEMF baseplate for **50x60mm** posts
6. The steel beam shall be painted with a good quality paint system consisting of a primer and top coat.

MAXIMUM POST CENTRES 'S max' (metres)

ALWAYS TAKE THE LESSER OF THE VALUE BELOW AND THE VALUE FROM THE STYLE SPECIFICATION

Height[3]	Baseplate Size D x W	Fasteners - Qty and Type[2]	Flange Thick-ness (See diagram)	Line No.	LOADING CLASS[1]																			
					N07C/N07R								N03R	Not Preventing Falls										
					Design Wind Speed[4]									Design Wind Speed[4]										
					VH		EH							M			H			VH		EH		
					50	52	54	56	58	60	62	64		38	40	42	44	46	48	50	52	54	56
1.0	90x115	4 x M8 BOLTS	NA	1	2.41	2.41	2.41	2.40	2.24	2.09	1.96	1.84	5.17	5.22	4.71	4.27	3.89	3.56	3.27	3.02	2.79	2.59	2.40
		4 x M10 TAP	7	2	1.51	1.51	1.51	1.51	1.40	1.31	1.23	1.15	3.24	3.27	2.95	2.68	2.44	2.23	2.05	1.89	1.75	1.62	1.51
1.1	90x115	4 x M8 BOLTS	NA	3	2.19	2.19	2.14	1.99	1.85	1.73	1.62	1.52	4.70	4.32	3.89	3.53	3.22	2.94	2.70	2.49	2.30	2.14	1.99
		4 x M10 TAP	7	4	1.37	1.37	1.34	1.25	1.16	1.08	1.02	0.95	2.95	2.70	2.44	2.21	2.02	1.85	1.70	1.56	1.44	1.34	1.25
1.2	90x115	4 x M8 BOLTS	NA	5	2.01	1.94	1.80	1.67	1.56	1.45	1.36	1.28	4.31	3.63	3.27	2.97	2.70	2.47	2.27	2.09	1.94	1.80	1.67
		4 x M10 TAP	7	6	1.26	1.21	1.13	1.05	0.98	0.91	0.85	0.80	2.70	2.27	2.05	1.86	1.70	1.55	1.42	1.31	1.21	1.13	1.05

1. LOADING CLASS: Refer to Page 206 of this Manual for the scope of the Loading Class designations.
2. FASTENER DESIGNATIONS: M8 and M10 Fasteners in table refer to UNEX Part No's FB8 and FB10 bolts.
   "M8 Bolts" = bolted with washers and nyloc nuts. "M10 Tap" = bolts threaded into pre-tapped holes in the steel to good workmanship and threads completely smeared with lanoline grease.
3. HEIGHT 'H': is the overall height of the balustrade above the substrate level shown. Interpolate for Heights between those shown.
4. DESIGN WIND SPEED: in m/s, Refer to Pages 56 to 57 for details of applicable wind codes and the methods for determining the Design Wind Speed.

STEEL - SIDE FIXING, BOLTS

Refer to all notes on Pages 102 and 103 which shall apply to this specification and the relevant pages in Chapter 5 Installation Guides. Refer also to Chapter 2 for the Style Specification.

VPE POST TYPES ONLY

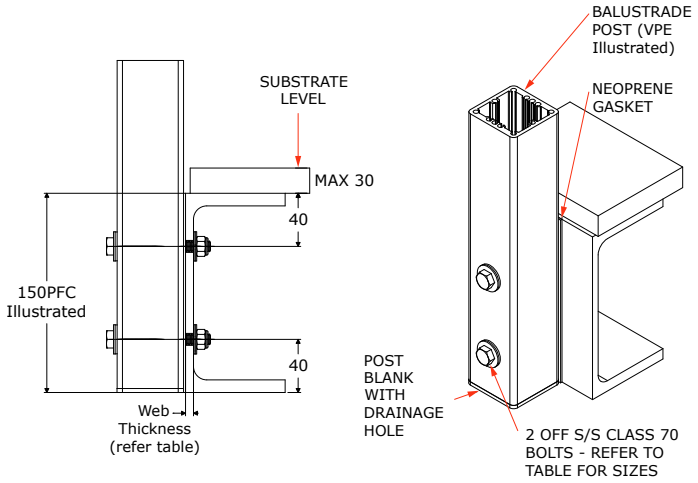

Note: VIH Stiffener required for VPH2, VPE Posts.
No stiffener required for VPM2 Post.
See page 146 for details.

1. All bolts, washers and nyloc nuts fixings shall be Class 70 316 stainless steel.
2. Washers to be fitted under all bolts as follows;
   - For 8mm bolted - 22mm O.D. S/S washer (Part No. FW8-22) with a polymer washer (Part No. FWP8-22G) between the S/S washer, aluminium baseplate and the steel beam.
   - For 10mm tapped - 21mm O.D. S/S washer (Part No. FW10-21) with a polymer washer (Part No. FWP10-22G) between the S/S washer, aluminium baseplate and the steel beam.
3. The maximum post spacing permitted is the LESSER of the spacing tabulated in the Style Specification in Section 3 and spacing shown on the table below.
4. Substrate design, including waterproofing and the structural design of the steel substrate and its connections are not included in this specification and must be carried out by others.
5. The steel beam shall be painted with a good quality paint system consisting of a primer and top coat.

MAXIMUM POST CENTRES 'S max' (metres)

ALWAYS TAKE THE LESSER OF THE VALUE BELOW AND THE VALUE FROM THE STYLE SPECIFICATION

Height[3]	Post Type (Refer Chapter 1)	"Steel Size (Depth)"	Fasteners - Qty and Type[2]	'Web Thickness (See diagram)	Line No.	LOADING CLASS[1]																			
						N07C/N07R								N03R	Not Preventing Falls										
						Design Wind Speed[4]									Design Wind Speed[4]										
						VH			EH						M			H			VH			EH	
						50	52	54	56	58	60	62	64		38	40	42	44	46	48	50	52	54	56
1.0	VPE VPC	150+	2xM8 BOLTS	NA	1	1.36	1.36	1.36	1.36	1.36	1.36	1.35	1.26	2.92	2.92	2.92	2.92	2.67	2.45	2.25	2.07	1.91	1.78	1.65
		150	2xM10 TAP	6	2	0.78	0.78	0.78	0.78	0.78	0.78	0.74	0.70	1.67	1.67	1.67	1.62	1.47	1.35	1.24	1.14	1.06	0.98	0.91
		200+	2xM10 TAP	6	3	1.09	1.09	1.09	1.09	1.09	1.09	1.08	1.02	2.33	2.33	2.33	2.33	2.15	1.97	1.80	1.66	1.54	1.43	1.33
1.1	VPE VPC	150+	2xM8 BOLTS	NA	4	1.25	1.25	1.25	1.25	1.25	1.19	1.11	1.04	2.67	2.67	2.67	2.42	2.21	2.02	1.86	1.71	1.58	1.47	1.36
		150	2xM10 TAP	6	5	0.72	0.72	0.72	0.72	0.70	-	-	-	1.53	1.53	1.47	1.34	1.22	1.11	1.02	0.94	0.87	0.81	0.75
		200+	2xM10 TAP	6	6	1.00	1.00	1.00	1.00	1.00	0.95	0.89	0.84	2.15	2.15	2.14	1.95	1.77	1.62	1.49	1.38	1.27	1.18	1.10
1.2	VPE VPC	150+	2xM8 BOLTS	NA	7	1.15	1.15	1.15	1.15	1.07	1.00	0.94	0.88	2.46	2.46	2.24	2.03	1.85	1.70	1.56	1.44	1.33	1.23	1.15
		150	2xM10 TAP	6	8	-	-	-	-	-	-	-	-	1.42	1.37	1.24	1.12	1.02	0.94	0.86	0.79	0.73	0.68	0.63
		200+	2xM10 TAP	6	9	0.93	0.93	0.93	0.92	0.86	0.80	0.75	0.71	2.00	2.00	1.80	1.64	1.49	1.36	1.25	1.16	1.07	0.99	0.92

1. LOADING CLASS: Refer to Page 211 of this Manual for the scope of the Loading Class designations.
2. FASTENER DESIGNATIONS: M8 and M10 Fasteners in table refer to UNEX Part No's FB8 and FB10 bolts.
   "M8 Bolts" = bolted with washers and nyloc nuts. "M10 Tap" = bolts threaded into pre-tapped holes in the steel to good workmanship and threads completely smeared with lanoline grease.
3. HEIGHT 'H': is the overall height of the balustrade above the substrate level shown. Interpolate for Heights between those shown.
4. DESIGN WIND SPEED: in m/s, Refer to Pages 60 to 61 for details of applicable wind codes and the methods for determining the Design Wind Speed.

STEEL - SIDE FIXING, BOLTS

Refer to all notes on Pages 102 and 103 which shall apply to this specification and the relevant pages in Chapter 5 Installation Guides. Refer also to Chapter 2 for the Style Specification.

APE2 POST TYPES ONLY

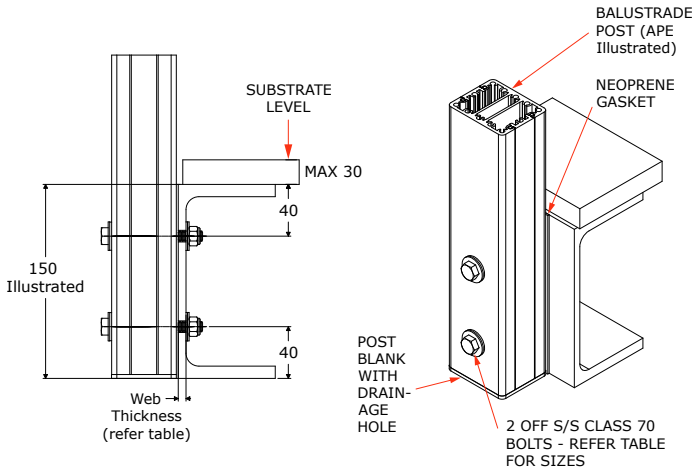

1. All bolts, washers and nyloc nuts fixings shall be Class 70 316 stainless steel.
2. Washers to be fitted under all bolts as follows;
   - For 8mm bolted - 22mm O.D. S/S washer (Part No. FW8-22) with a polymer washer (Part No. FWP8-22G) between the S/S washer, aluminium post and the steel beam.
   - For 10mm tapped - 21mm O.D. S/S washer (Part No. FW10-21) with a polymer washer (Part No. FWP10-22G) between the S/S washer, aluminium post and the steel.
3. The maximum post spacing permitted is the LESSER of the spacing tabulated in the Style Specification in Section 3 and spacing shown on the table below.
4. Substrate design, including waterproofing and the structural design of the steel substrate and its connections are not included in this specification and must be carried out by others.
5. The steel beam shall be painted with a good quality paint system consisting of a primer and top coat.

MAXIMUM POST CENTRES 'S max' (metres)

ALWAYS TAKE THE LESSER OF THE VALUE BELOW AND THE VALUE FROM THE STYLE SPECIFICATION

Height[3]	Post Type (Refer Chapter 1)	Steel Size (Depth)	Fasteners - Qty and Type[2]	Web Thickness (See diagram)	Line No.	LOADING CLASS[1]																		
						N07C/N07R								N03R	Not Preventing Falls									
						Design Wind Speed[4]									Design Wind Speed[4]									
						VH			EH						M			H			VH			EH
						50	52	54	56	58	60	62	64		38	40	42	44	46	48	50	52	54	56
1.0	APE2	150	2 x M8 BOLTS	NA	1	1.48	1.48	1.48	1.48	1.48	1.36	1.27	1.19	3.18	3.18	3.06	2.78	2.53	2.31	2.12	1.96	1.81	1.68	1.56
		200+	2 x M8 BOLTS	NA	2	1.67	1.67	1.67	1.67	1.67	1.62	1.52	1.43	3.58	4.06	3.66	3.32	3.03	2.77	2.54	2.34	2.16	2.01	1.87
		150	2 x M10 TAP	6	3	0.77	0.77	0.77	0.77	0.77	0.74	0.70	0.65	1.66	1.86	1.68	1.52	1.39	1.27	1.16	1.07	0.99	0.92	0.85
		200+	2 x M10 TAP	6	4	1.08	1.08	1.08	1.08	1.08	1.08	1.02	0.95	2.32	2.71	2.45	2.22	2.02	1.85	1.70	1.56	1.45	1.34	1.25
1.1	APE2	150	2 x M8 BOLTS	NA	5	1.37	1.37	1.37	1.30	1.21	1.13	1.06	0.99	2.93	2.93	2.54	2.31	2.10	1.92	1.77	1.63	1.50	1.39	1.30
		200+	2 x M8 BOLTS	NA	6	1.53	1.53	1.53	1.53	1.44	1.35	1.26	1.18	3.28	3.37	3.04	2.76	2.51	2.30	2.11	1.94	1.80	1.67	1.55
		150	2 x M10 TAP	6	7	0.71	0.71	0.71	0.71	0.66	0.62	0.58	0.54	1.53	1.54	1.39	1.26	1.15	1.05	0.97	0.89	0.82	0.76	0.71
		200+	2 x M10 TAP	6	8	1.00	1.00	1.00	1.00	0.96	0.90	0.84	0.79	2.15	2.25	2.03	1.84	1.68	1.54	1.41	1.30	1.20	1.11	1.03
1.2	APE2	150	2 x M8 BOLTS	NA	9	1.27	1.27	1.18	1.09	1.02	0.95	0.89	0.84	2.72	2.38	2.15	1.95	1.77	1.62	1.49	1.37	1.27	1.18	1.09
		200+	2 x M8 BOLTS	NA	10	1.41	1.41	1.41	1.31	1.22	1.14	1.06	1.00	3.02	2.84	2.57	2.33	2.12	1.94	1.78	1.64	1.52	1.41	1.31
		150	2 x M10 TAP	6	11	0.66	0.66	0.64	0.60	0.56	0.52	0.49	0.46	1.42	1.30	1.18	1.07	0.97	0.89	0.81	0.75	0.69	0.64	0.60
		200+	2 x M10 TAP	6	12	0.93	0.93	0.93	0.87	0.81	0.76	0.71	0.67	2.00	1.90	1.72	1.56	1.42	1.30	1.19	1.10	1.01	0.94	0.87

1. LOADING CLASS: Refer to Page 211 of this Manual for the scope of the Loading Class designations.
2. FASTENER DESIGNATIONS: M8 and M10 Fasteners in table refer to UNEX Part No's FB8 and FB10 bolts.
   "M8 Bolts" = bolted with washers and nyloc nuts. "M10 Tap" = bolts threaded into pre-tapped holes in the steel to good workmanship and threads completely smeared with lanoline grease.
3. HEIGHT 'H': is the overall height of the balustrade above the substrate level shown. Interpolate for Heights between those shown.
4. DESIGN WIND SPEED: in m/s, Refer to Pages 60 to 61 for details of applicable wind codes and the methods for determining the Design Wind Speed.

CHAPTER 4 - FRAMED GLASS STYLES

SPEC ID	STYLE (RAIL TYPE)	
AS.25.05T	'Avon' (ART Top Rail)	pg122
AS.25.06T	'Avon' (PRR Top Rail)	pg123
AS.25.08T	'Avon' (VRE Top Rail)	pg124
AS.25.12T	'Avon' (VRR Top Rail)	pg125
AS.25.04T	'Avon' (VRT Top Rail)	pg126
AS.30.05T	'Camden' (ART Top Rail)	pg127
AS.30.06T	'Camden' (PRR Top Rail)	pg128
AS.30.08T	'Camden' (VRE Top Rail)	pg129
AS.30.12T	'Camden' (VRR Top Rail)	pg130
AS.30.04T	'Camden' (VRT Top Rail)	pg131
AS.40.05T	'Spectra' (ART Top Rail)	pg132
AS.40.06T	'Spectra' (PRR Top Rail)	pg133
AS.40.08T	'Spectra' (VRE Top Rail)	pg134
AS.40.12T	'Spectra' (VRR Top Rail)	pg135
AS.40.04T	'Spectra' (VRT Top Rail)	pg136
AS.41.05T	'Siena' (ART Top Rail)	pg137
AS.41.06T	'Siena' (PRR Top Rail)	pg138
AS.41.08T	'Siena' (VRE Top Rail)	pg139
AS.41.12T	'Siena' (VRR Top Rail)	pg140
AS.41.04T	'Siena' (VRT Top Rail)	pg141

'AVON' (ART TOP RAIL)

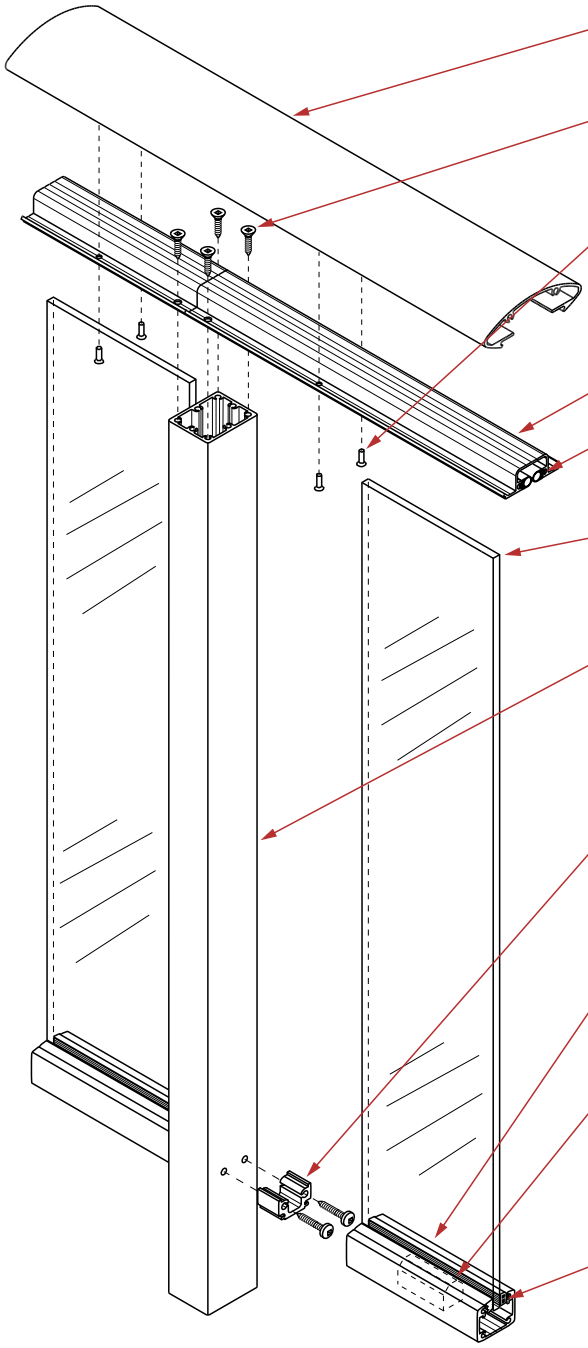

ART TOP RAIL

FV10-19.T1 SCREWS. 4 per post. Drill size = Ø5.5mm.

FS4-4 RIVETS. 1 pair within 150mm from panel ends, and at 1000mm maximum centres between, and on either side of joints in the Outer Top Rail. Drill size = Ø3.3mm.

PZT GLAZING INNER TOP RAIL.

SRD RETAINED GASKET both sides of glass. Must be slid into rail prior to assembly.

TOUGHENED GLASS, with exposed vertical edges.

VPM2 (illustrated), VPH2, VPC, VPE, or DPE Post. At 90° corners use VPH2 post rather than the VPM2 post.

ANG CONNECTOR type, secured to post with FT10-32.T1 SCREWS. 2 per connector. Drill size into post = Ø4.1mm.

VRL3 LOWER RAIL. Ø5.5mm drainage hole to be provided at mid span in exterior applications.

SBH SETTING BLOCKS. Must be 30mm from Lower Rail ends. Insert into rail prior to assembly if using SRG70 Gasket.

SRG70 RETAINED GASKET to outer face of glass. Must be slid into rail before assembly.

SWE70 WEDGE GASKET to inner face when using 6mm glass. Use SWE50 for 8mm glass and SWE55 for 10mm glass. (Alternatively use on both faces of the glass).

Refer elsewhere for corners, slopes and other situations not illustrated here.

'AVON' (PRR TOP RAIL)

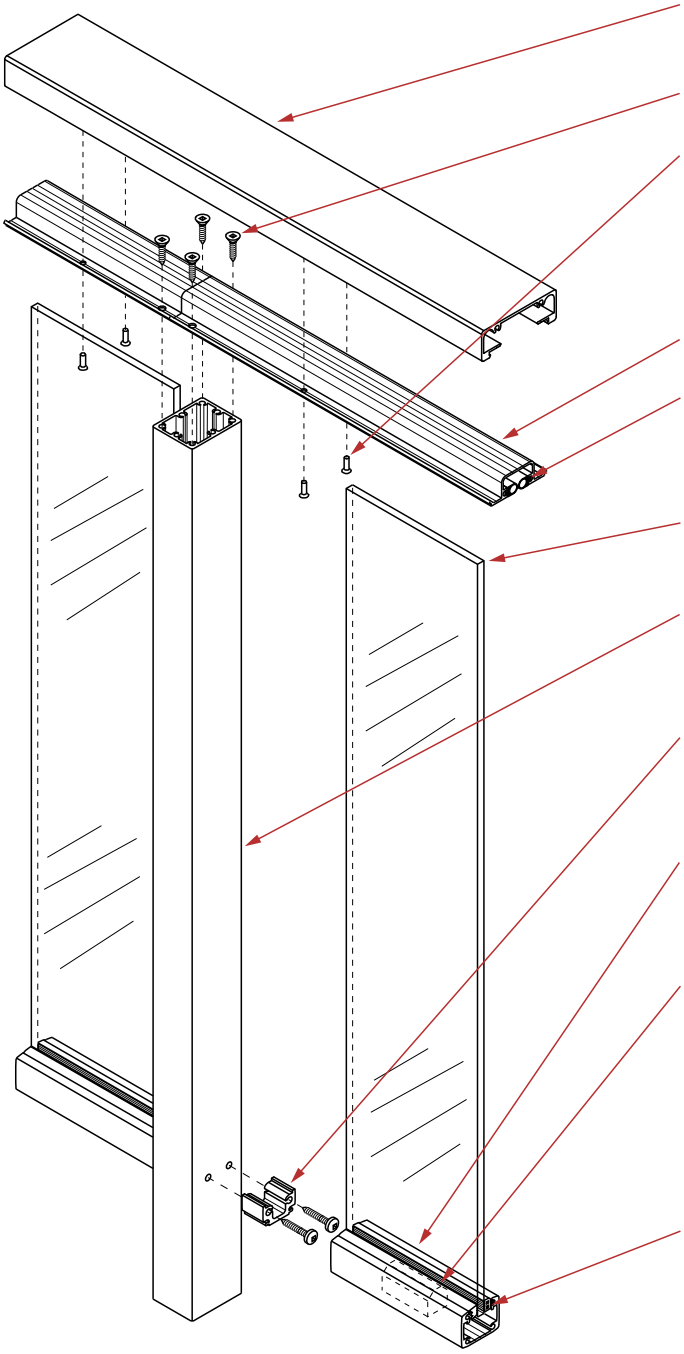

PRR TOP RAIL

FV10-19.T1 SCREWS. 4 per post. Drill size = Ø5.5mm.

FS4-4 RIVETS. 1 pair within 150mm from panel ends, and at 1000mm maximum centres between, and on either side of joints in the Outer Top Rail. Drill size = Ø3.3mm.

PZT GLAZING INNER TOP RAIL.

SRD RETAINED GASKET both sides of glass. Must be slid into rail prior to assembly.

TOUGHENED GLASS, with exposed vertical edges.

VPM2 (illustrated), VPH2, VPC, VPE, or DPE Post. At 90° corners use VPH2 post rather than the VPM2 post.

ANG CONNECTOR type, secured to post with FT10-32.T1 SCREWS. 2 per connector. Drill size into post = Ø4.1mm.

VRL3 LOWER RAIL. Ø5.5mm drainage hole to be provided at mid span in exterior applications.

SBH SETTING BLOCKS. Must be 30mm from Lower Rail ends. Insert into rail prior to assembly if using SRG70 Gasket.

SRG70 RETAINED GASKET to outer face of glass. Must be slid into rail before assembly.

SWE70 WEDGE GASKET to inner face when using 6mm glass. Use SWE50 for 8mm glass and SWE55 for 10mm glass. (Alternatively use on both faces of the glass).

Refer elsewhere for corners, slopes and other situations not illustrated here.

'AVON' (VRE TOP RAIL)

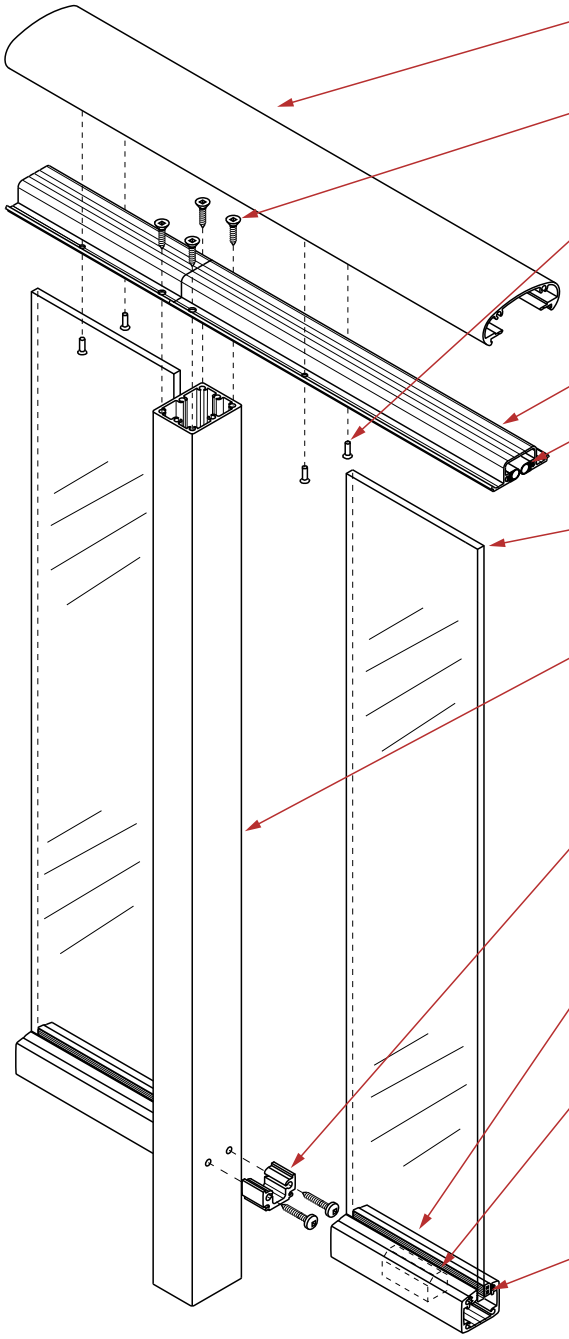

VRE TOP RAIL

FV10-19.T1 SCREWS. 4 per post. Drill size = Ø5.5mm.

FS4-4 RIVETS. 1 pair within 150mm from panel ends, and at 1000mm maximum centres between, and on either side of joints in the Outer Top Rail. Drill size = Ø3.3mm.

PZT GLAZING INNER TOP RAIL.

SRD RETAINED GASKET both sides of glass. Must be slid into rail prior to assembly.

TOUGHENED GLASS, with exposed vertical edges.

VPM2 (illustrated), VPH2, VPC, VPE, or DPE Post. At 90° corners use VPH2 post rather than the VPM2 post.

ANG CONNECTOR type, secured to post with FT10-32.T1 SCREWS. 2 per connector. Drill size into post = Ø4.1mm.

VRL3 LOWER RAIL. Ø5.5mm drainage hole to be provided at mid span in exterior applications.

SBH SETTING BLOCKS. Must be 30mm from Lower Rail ends. Insert into rail prior to assembly if using SRG70 Gasket.

SRG70 RETAINED GASKET to outer face of glass. Must be slid into rail before assembly.

SWE70 WEDGE GASKET to inner face when using 6mm glass. Use SWE50 for 8mm glass and SWE55 for 10mm glass. (Alternatively use on both faces of the glass).

Refer elsewhere for corners, slopes and other situations not illustrated here.

'AVON' (VRR TOP RAIL)

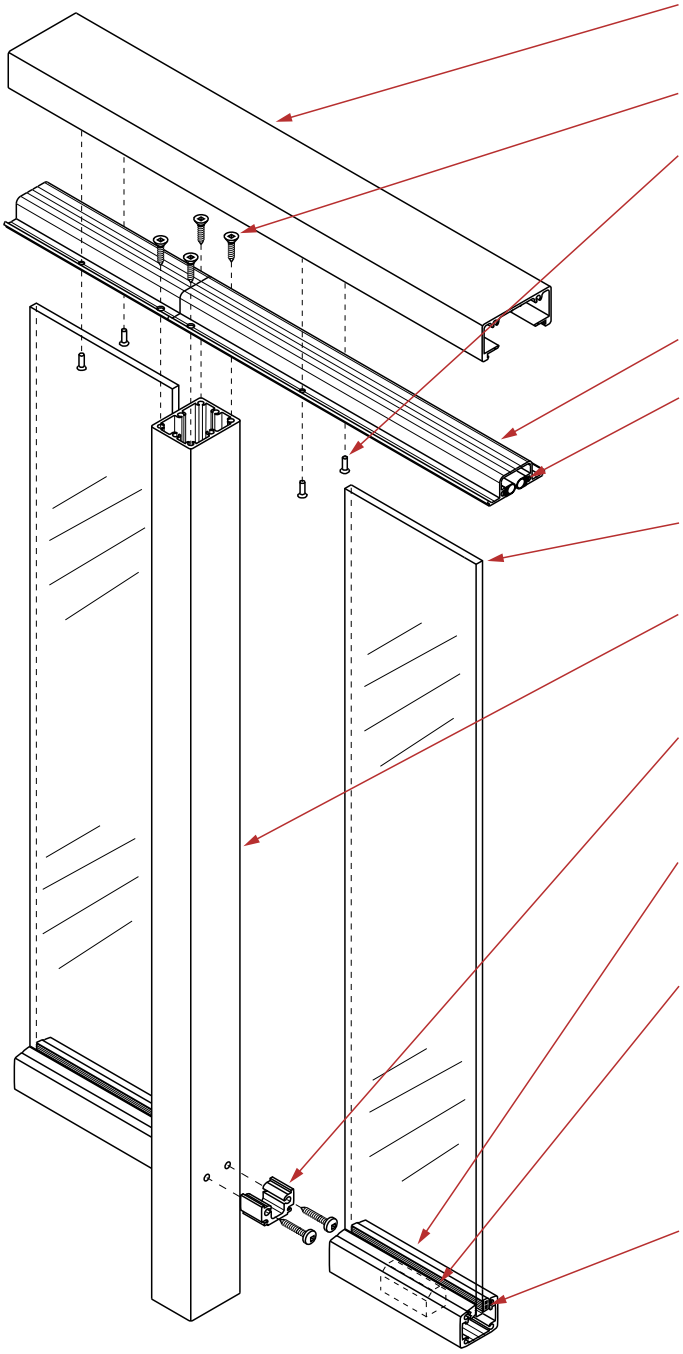

VRR TOP RAIL

FV10-19.T1 SCREWS. 4 per post. Drill size = Ø5.5mm.

FS4-4 RIVETS. 1 pair within 150mm from panel ends, and at 1000mm maximum centres between, and on either side of joints in the Outer Top Rail. Drill size = Ø3.3mm.

PZT GLAZING INNER TOP RAIL.

SRD RETAINED GASKET both sides of glass. Must be slid into rail prior to assembly.

TOUGHENED GLASS, with exposed vertical edges.

VPM2 (illustrated), VPH2, VPC, VPE, or DPE Post. At 90° corners use VPH2 post rather than the VPM2 post.

ANG CONNECTOR type, secured to post with FT10-32.T1 SCREWS. 2 per connector. Drill size into post = Ø4.1mm.

VRL3 LOWER RAIL. Ø5.5mm drainage hole to be provided at mid span in exterior applications.

SBH SETTING BLOCKS. Must be 30mm from Lower Rail ends. Insert into rail prior to assembly if using SRG70 Gasket.

SRG70 RETAINED GASKET to outer face of glass. Must be slid into rail before assembly.

SWE70 WEDGE GASKET to inner face when using 6mm glass. Use SWE50 for 8mm glass and SWE55 for 10mm glass. (Alternatively use on both faces of the glass).

Refer elsewhere for corners, slopes and other situations not illustrated here.

'AVON' (VRT TOP RAIL)

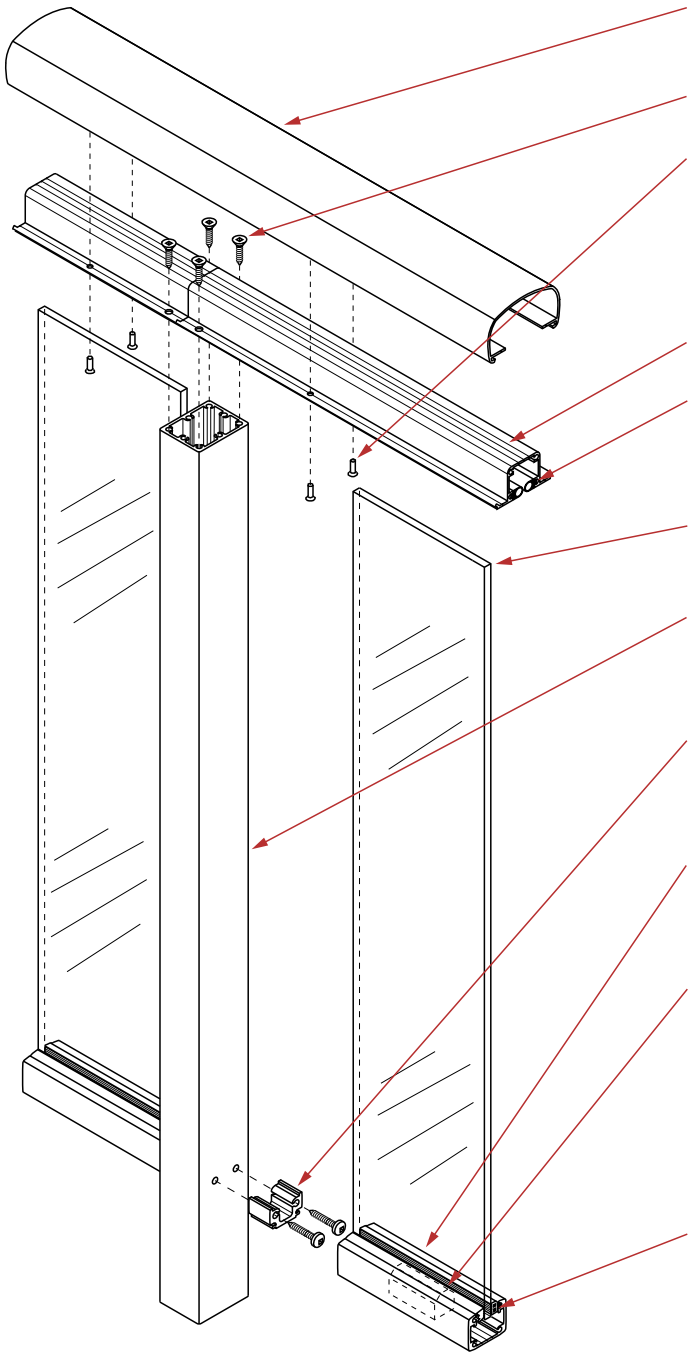

VRT TOP RAIL

FV10-19.T1 SCREWS. 4 per post. Drill size = Ø5.5mm.

FS4-4 RIVETS. 1 pair within 150mm from panel ends, and at 1000mm maximum centres between, and on either side of joints in the Outer Top Rail. Drill size = Ø3.3mm.

DZT3 GLAZING INNER TOP RAIL.

SRD RETAINED GASKET both sides of glass. Must be slid into rail prior to assembly.

TOUGHENED GLASS, with exposed vertical edges.

VPM2 (illustrated), VPH2, VPC or VPE Post. At 90° corners use VPH2 post rather than the VPM2 post.

ANG CONNECTOR type, secured to post with FT10-32.T1 SCREWS. 2 per connector. Drill size into post = Ø4.1mm.

VRL3 LOWER RAIL. Ø5.5mm drainage hole to be provided at mid span in exterior applications.

SBS SETTING BLOCKS. Must be 30mm from Lower Rail ends. Insert into rail prior to assembly if using SRG70 Gasket.

SRG70 RETAINED GASKET to outer face of glass. Must be slid into rail before assembly.

SWE70 WEDGE GASKET to inner face when using 6mm glass. Use SWE50 for 8mm glass and SWE55 for 10mm glass. (Alternatively use on both faces of the glass).

Refer elsewhere for corners, slopes and other situations not illustrated here.

'CAMDEN' (ART TOP RAIL)

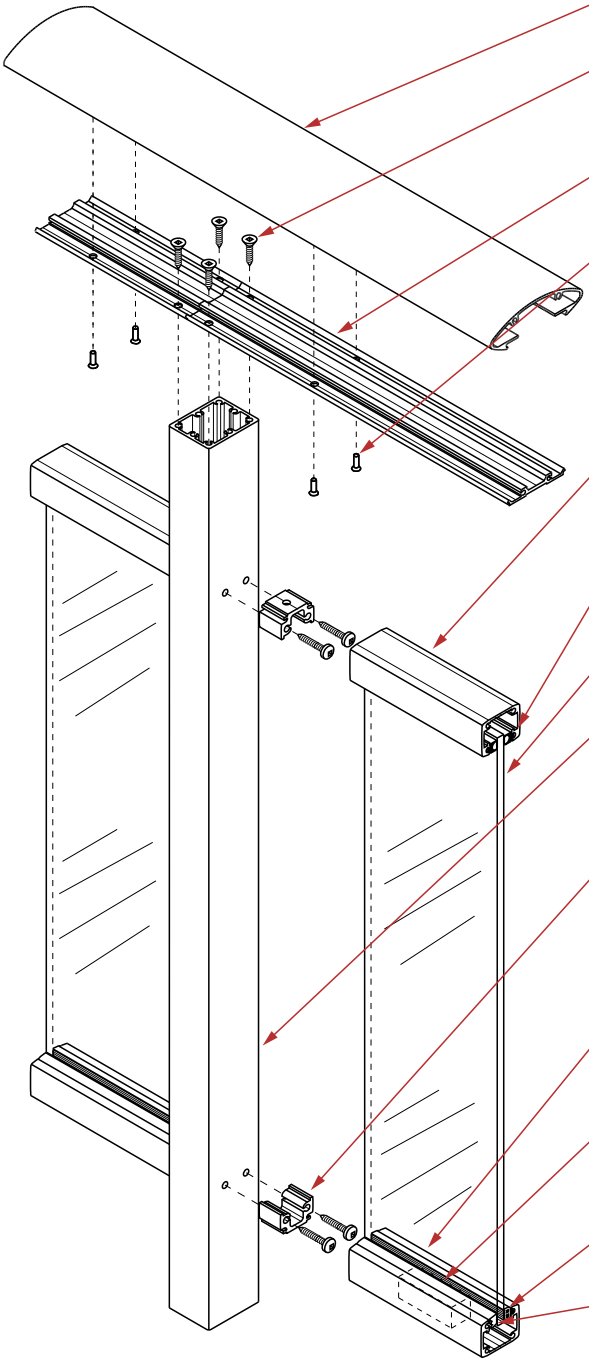

ART TOP RAIL

FV10-19.T1 SCREWS. 4 per post. Drill size = Ø5.5mm.

DRH INNER TOP RAIL.

FS4-4 RIVETS. 1 pair within 150mm from panel ends, and at 1000mm maximum centres between, and on either side of joints in the Outer Top Rail. Drill size = Ø3.3mm.

VRL3 MID RAIL

SRD RETAINED GASKET both sides of glass. Must be slid into rail prior to assembly.

TOUGHENED GLASS, with exposed vertical edges.

VPM2 (illustrated), VPH2, VPC or VPE Post. At 90° corners use VPH2 post rather than the VPM2 post.

ANG CONNECTOR type to Lower and Mid Rails, secured to post with FT10-32.T1 SCREWS. 2 per connector. Drill size into post = Ø4.1mm.

VRL3 LOWER RAIL. Ø5.5mm drainage hole to be provided at mid span in exterior applications.

SBS SETTING BLOCKS. Must be 30mm from Lower Rail ends. Insert into rail prior to assembly if using SRG70 Gasket.

SRG70 RETAINED GASKET to outer face of glass. Must be slid into rail before assembly.

SWE70 WEDGE GASKET to inner face when using 6mm glass. Use SWE50 for 8mm glass and SWE55 for 10mm glass. (Alternatively use on both faces of the glass).

Refer elsewhere for corners, slopes and other situations not illustrated here.

'CAMDEN' (PRR TOP RAIL)

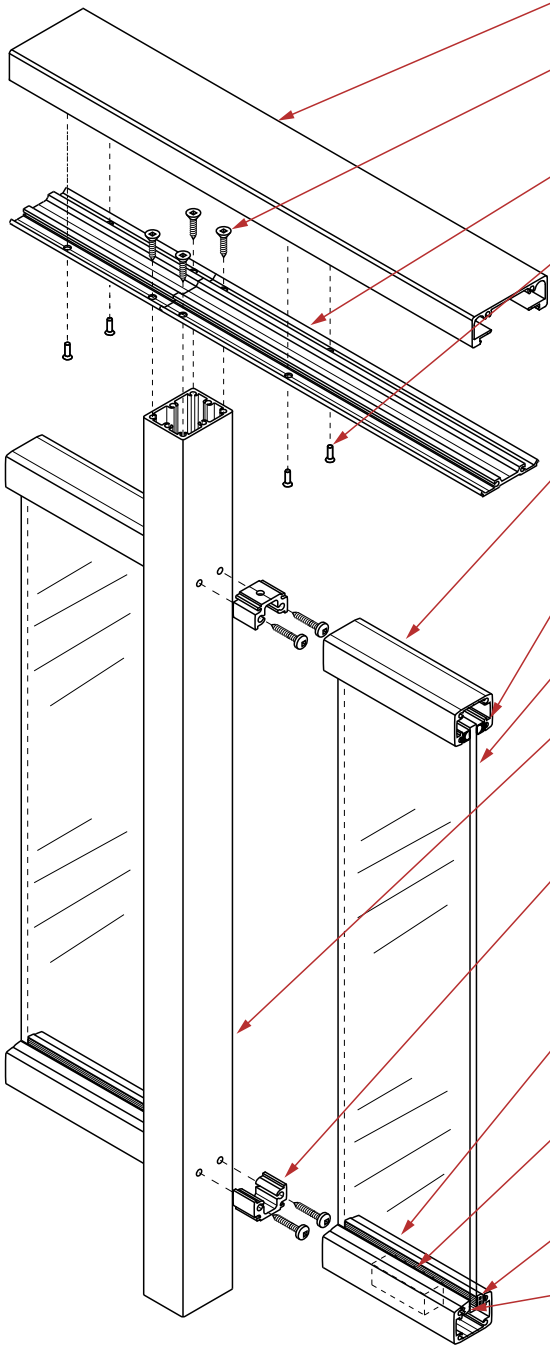

PRR TOP RAIL

FV10-19.T1 SCREWS. 4 per post. Drill size = Ø5.5mm.

DRH INNER TOP RAIL.

FS4-4 RIVETS. 1 pair within 150mm from panel ends, and at 1000mm maximum centres between, and on either side of joints in the Outer Top Rail. Drill size = Ø3.3mm.

VRL3 MID RAIL

SRD RETAINED GASKET both sides of glass. Must be slid into rail prior to assembly.

TOUGHENED GLASS, with exposed vertical edges.

VPM2 (illustrated), VPH2, VPC or VPE Post. At 90° corners use VPH2 post rather than the VPM2 post.

ANG CONNECTOR type to Lower and Mid Rails, secured to post with FT10-32.T1 SCREWS. 2 per connector. Drill size into post = Ø4.1mm.

VRL3 LOWER RAIL. Ø5.5mm drainage hole to be provided at mid span in exterior applications.

SBS SETTING BLOCKS. Must be 30mm from Lower Rail ends. Insert into rail prior to assembly if using SRG70 Gasket.

SRG70 RETAINED GASKET to outer face of glass. Must be slid into rail before assembly.

SWE70 WEDGE GASKET to inner face when using 6mm glass. Use SWE50 for 8mm glass and SWE55 for 10mm glass. (Alternatively use on both faces of the glass).

Refer elsewhere for corners, slopes and other situations not illustrated here.

'CAMDEN' (VRE TOP RAIL)

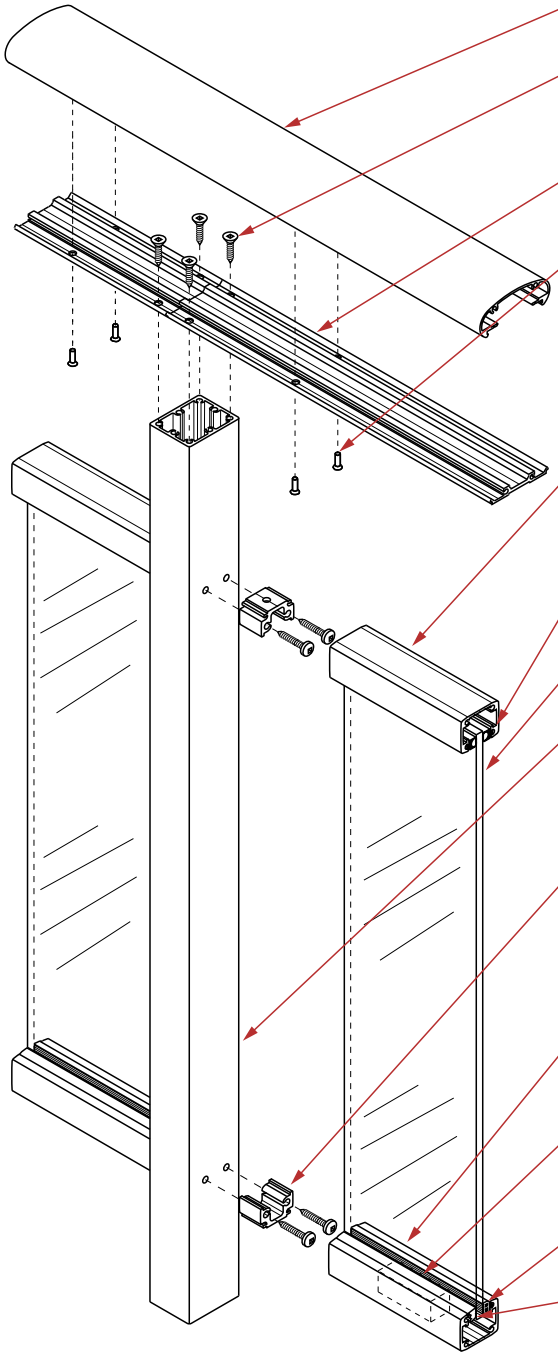

VRE TOP RAIL

FV10-19.T1 SCREWS. 4 per post. Drill size = Ø5.5mm.

DRH INNER TOP RAIL.

FS4-4 RIVETS. 1 pair within 150mm from panel ends, and at 1000mm maximum centres between, and on either side of joints in the Outer Top Rail. Drill size = Ø3.3mm.

VRL3 MID RAIL

SRD RETAINED GASKET both sides of glass. Must be slid into rail prior to assembly.

TOUGHENED GLASS, with exposed vertical edges.

VPM2 (illustrated), VPH2, VPC or VPE Post. At 90° corners use VPH2 post rather than the VPM2 post.

ANG CONNECTOR type to Lower and Mid Rails, secured to post with FT10-32.T1 SCREWS. 2 per connector. Drill size into post = Ø4.1mm.

VRL3 LOWER RAIL. Ø5.5mm drainage hole to be provided at mid span in exterior applications.

SBS SETTING BLOCKS. Must be 30mm from Lower Rail ends. Insert into rail prior to assembly if using SRG70 Gasket.

SRG70 RETAINED GASKET to outer face of glass. Must be slid into rail before assembly.

SWE70 WEDGE GASKET to inner face when using 6mm glass. Use SWE50 for 8mm glass and SWE55 for 10mm glass. (Alternatively use on both faces of the glass).

Refer elsewhere for corners, slopes and other situations not illustrated here.

'CAMDEN' (VRR TOP RAIL)

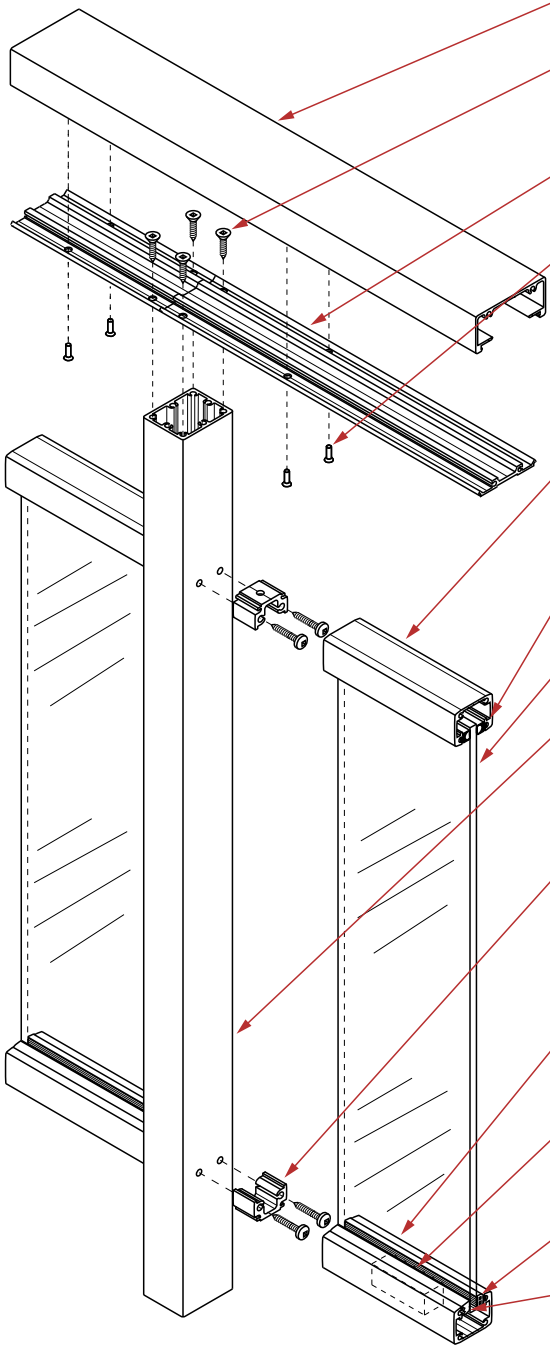

VRR TOP RAIL

FV10-19.T1 SCREWS. 4 per post. Drill size = Ø5.5mm.

DRH INNER TOP RAIL.

FS4-4 RIVETS. 1 pair within 150mm from panel ends, and at 1000mm maximum centres between, and on either side of joints in the Outer Top Rail. Drill size = Ø3.3mm.

VRL3 MID RAIL

SRD RETAINED GASKET both sides of glass. Must be slid into rail prior to assembly.

TOUGHENED GLASS, with exposed vertical edges.

VPM2 (illustrated), VPH2, VPC or VPE Post. At 90° corners use VPH2 post rather than the VPM2 post.

ANG CONNECTOR type to Lower and Mid Rails, secured to post with FT10-32.T1 SCREWS. 2 per connector. Drill size into post = Ø4.1mm.

VRL3 LOWER RAIL. Ø5.5mm drainage hole to be provided at mid span in exterior applications.

SBS SETTING BLOCKS. Must be 30mm from Lower Rail ends. Insert into rail prior to assembly if using SRG70 Gasket.

SRG70 RETAINED GASKET to outer face of glass. Must be slid into rail before assembly.

SWE70 WEDGE GASKET to inner face when using 6mm glass. Use SWE50 for 8mm glass and SWE55 for 10mm glass. (Alternatively use on both faces of the glass).

Refer elsewhere for corners, slopes and other situations not illustrated here.

'CAMDEN' (VRT TOP RAIL)

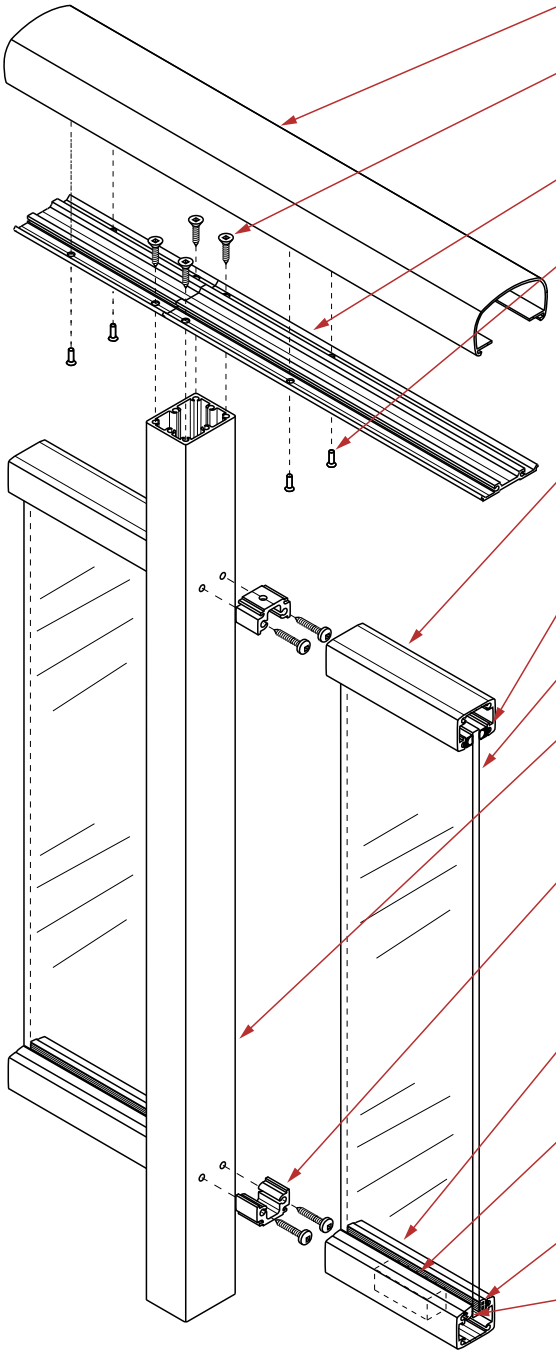

VRT TOP RAIL

FV10-19.T1 SCREWS. 4 per post. Drill size = Ø5.5mm.

DRH INNER TOP RAIL.

FS4-4 RIVETS. 1 pair within 150mm from panel ends, and at 1000mm maximum centres between, and on either side of joints in the Outer Top Rail. Drill size = Ø3.3mm.

VRL3 MID RAIL

SRD RETAINED GASKET both sides of glass. Must be slid into rail prior to assembly.

TOUGHENED GLASS, with exposed vertical edges.

VPM2 (illustrated), VPH2, VPC or VPE Post. At 90° corners use VPH2 post rather than the VPM2 post.

ANG CONNECTOR type to Lower and Mid Rails, secured to post with FT10-32.T1 SCREWS. 2 per connector. Drill size into post = Ø4.1mm.

VRL3 LOWER RAIL. Ø5.5mm drainage hole to be provided at mid span in exterior applications.

SBS SETTING BLOCKS. Must be 30mm from Lower Rail ends. Insert into rail prior to assembly if using SRG70 Gasket.

SRG70 RETAINED GASKET to outer face of glass. Must be slid into rail before assembly.

SWE70 WEDGE GASKET to inner face when using 6mm glass. Use SWE50 for 8mm glass and SWE55 for 10mm glass. (Alternatively use on both faces of the glass).

Refer elsewhere for corners, slopes and other situations not illustrated here.

'SPECTRA' (ART TOP RAIL)

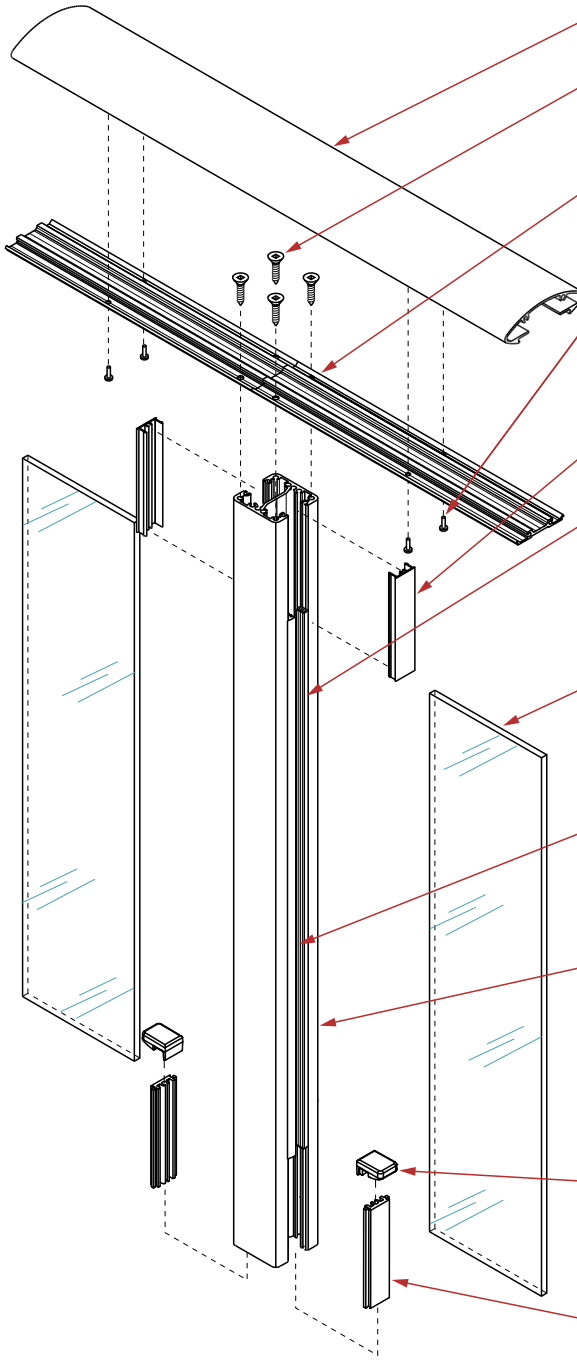

ART TOP RAIL

FV10-19 SCREWS. 4 per post. Drill size = Ø5.5mm.

DRH INNER TOP RAIL

FS4-4 RIVETS. 1 pair within 150mm from panel ends; and at 1000mm maximum centres between, and on either side of joints in Outer Top Rail. Drill size = Ø3.3mm.

AIR INFILL between glass and Top Rail. Insert after glass installation.

RETAINED GASKET to the outer face of glass, either SRG70 for 6mm and 8mm glass, or SRG40 for 10mm and 12mm glass. Must be slid into post prior to assembly.

TOUGHENED GLASS, of appropriate thickness, depending on the post spacing. Refer to Style Specification. Exposed horizontal edges to be flat polished.

WEDGE GASKET to the inner face of glass, either SWE70 for 6mm glass, SWE50 for 8mm glass, SWE55 for 10mm glass, or SWE35 for 12mm glass.

APS2 or APE2 RECESSED POST. On 90° corners use APQ2 CORNER RECESSED POST

AKS2 BRACKET, to support glass. Attach to AIA insert (press fit). For further detail of bracket attachment for situations, refer to "AKS attachment" pages in Chapter 5.

AIA INSERT for supporting glass by transferring weight down to base plate or substrate.

Refer elsewhere for corners, slopes and other situations not illustrated here.

'SPECTRA' (PRR TOP RAIL)

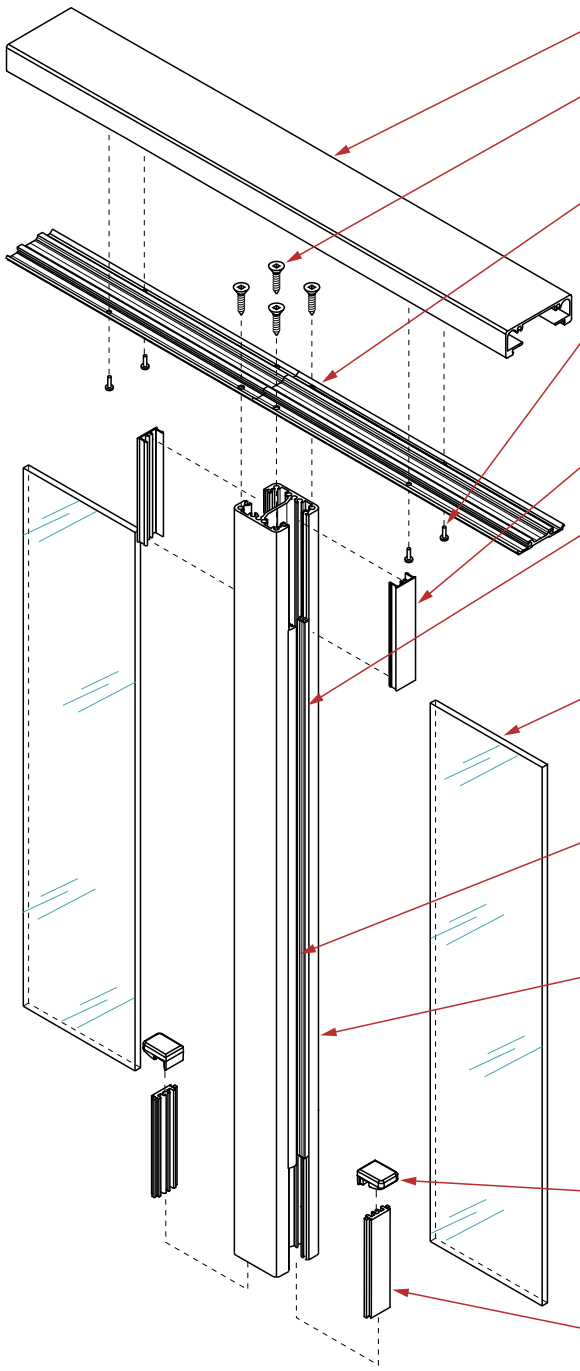

PRR TOP RAIL

FV10-19 SCREWS. 4 per post. Drill size = Ø5.5mm.

DRH INNER TOP RAIL

FS4-4 RIVETS. 1 pair within 150mm from panel ends; and at 1000mm maximum centres between, and on either side of joints in Outer Top Rail. Drill size = Ø3.3mm.

AIR INFILL between glass and Top Rail. Insert after glass installation.

RETAINED GASKET to the outer face of glass, either SRG70 for 6mm and 8mm glass, or SRG40 for 10mm and 12mm glass. Must be slid into post prior to assembly.

TOUGHENED GLASS, of appropriate thickness, depending on the post spacing. Refer to Style Specification. Exposed horizontal edges to be flat polished.

WEDGE GASKET to the inner face of glass, either SWE70 for 6mm glass, SWE50 for 8mm glass, SWE55 for 10mm glass, or SWE35 for 12mm glass.

APS2 or APE2 RECESSED POST. On 90° corners use APQ2 CORNER RECESSED POST

AKS2 BRACKET, to support glass. Attach to AIA insert (press fit). For further detail of bracket attachment for situations, refer to "AKS attachment" pages in Chapter 5.

AIA INSERT for supporting glass by transferring weight down to base plate or substrate.

Refer elsewhere for corners, slopes and other situations not illustrated here.

'SPECTRA' (VRE TOP RAIL)

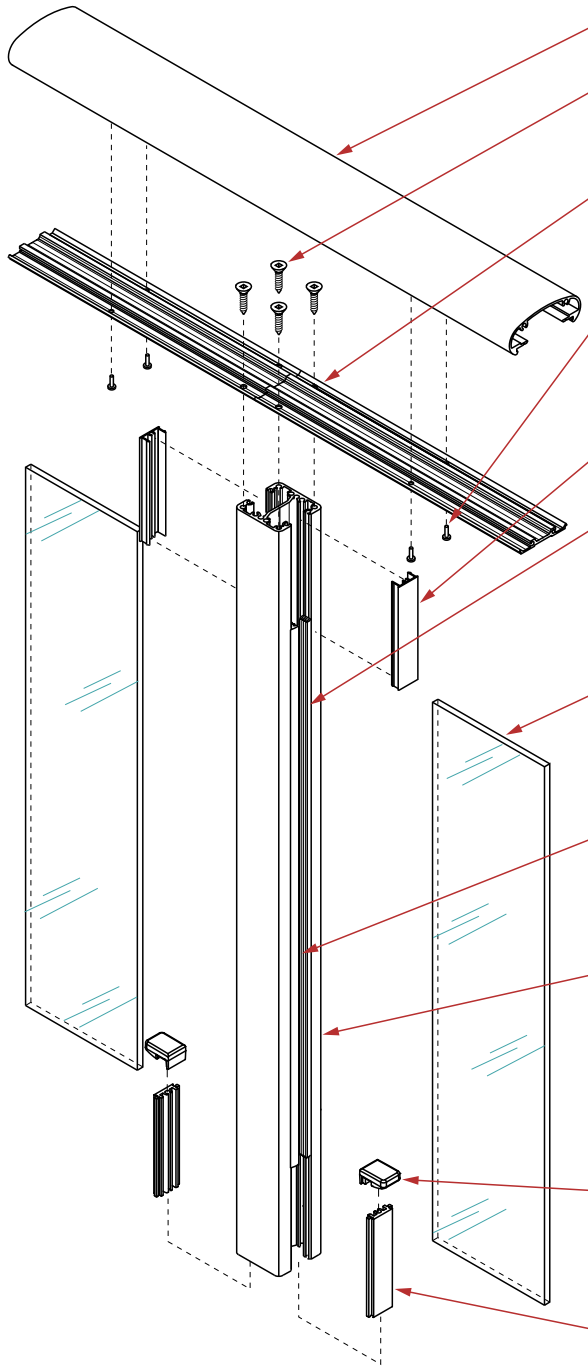

VRE TOP RAIL

FV10-19 SCREWS. 4 per post. Drill size = Ø5.5mm.

DRH INNER TOP RAIL

FS4-4 RIVETS. 1 pair within 150mm from panel ends; and at 1000mm maximum centres between, and on either side of joints in Outer Top Rail. Drill size = Ø3.3mm.

AIR INFILL between glass and Top Rail. Insert after glass installation.

RETAINED GASKET to the outer face of glass, either SRG70 for 6mm and 8mm glass, or SRG40 for 10mm and 12mm glass. Must be slid into post prior to assembly.

TOUGHENED GLASS, of appropriate thickness, depending on the post spacing. Refer to Style Specification. Exposed horizontal edges to be flat polished.

WEDGE GASKET to the inner face of glass, either SWE70 for 6mm glass, SWE50 for 8mm glass, SWE55 for 10mm glass, or SWE35 for 12mm glass.

APS2 or APE2 RECESSED POST. On 90° corners use APQ2 CORNER RECESSED POST

AKS2 BRACKET, to support glass. Attach to AIA insert (press fit). For further detail of bracket attachment for situations, refer to "AKS attachment" pages in Chapter 5.

AIA INSERT for supporting glass by transferring weight down to base plate or substrate.

Refer elsewhere for corners, slopes and other situations not illustrated here.

'SPECTRA' (VRR TOP RAIL)

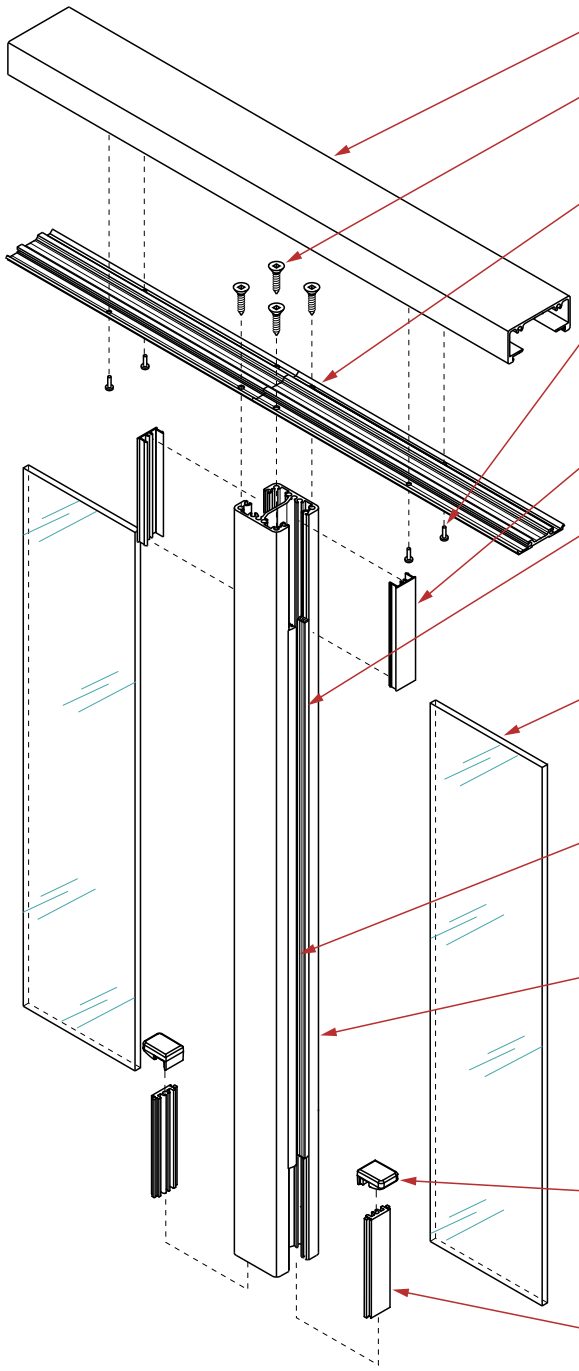

VRR TOP RAIL

FV10-19 SCREWS. 4 per post. Drill size = Ø5.5mm.

DRH INNER TOP RAIL

FS4-4 RIVETS. 1 pair within 150mm from panel ends; and at 1000mm maximum centres between, and on either side of joints in Outer Top Rail. Drill size = Ø3.3mm.

AIR INFILL between glass and Top Rail. Insert after glass installation.

RETAINED GASKET to the outer face of glass, either SRG70 for 6mm and 8mm glass, or SRG40 for 10mm and 12mm glass. Must be slid into post prior to assembly.

TOUGHENED GLASS, of appropriate thickness, depending on the post spacing. Refer to Style Specification. Exposed horizontal edges to be flat polished.

WEDGE GASKET to the inner face of glass, either SWE70 for 6mm glass, SWE50 for 8mm glass, SWE55 for 10mm glass, or SWE35 for 12mm glass.

APS2 or APE2 RECESSED POST. On 90° corners use APQ2 CORNER RECESSED POST

AKS2 BRACKET, to support glass. Attach to AIA insert (press fit). For further detail of bracket attachment for situations, refer to "AKS attachment" pages in Chapter 5.

AIA INSERT for supporting glass by transferring weight down to base plate or substrate.

Refer elsewhere for corners, slopes and other situations not illustrated here.

'SPECTRA' (VRT TOP RAIL)

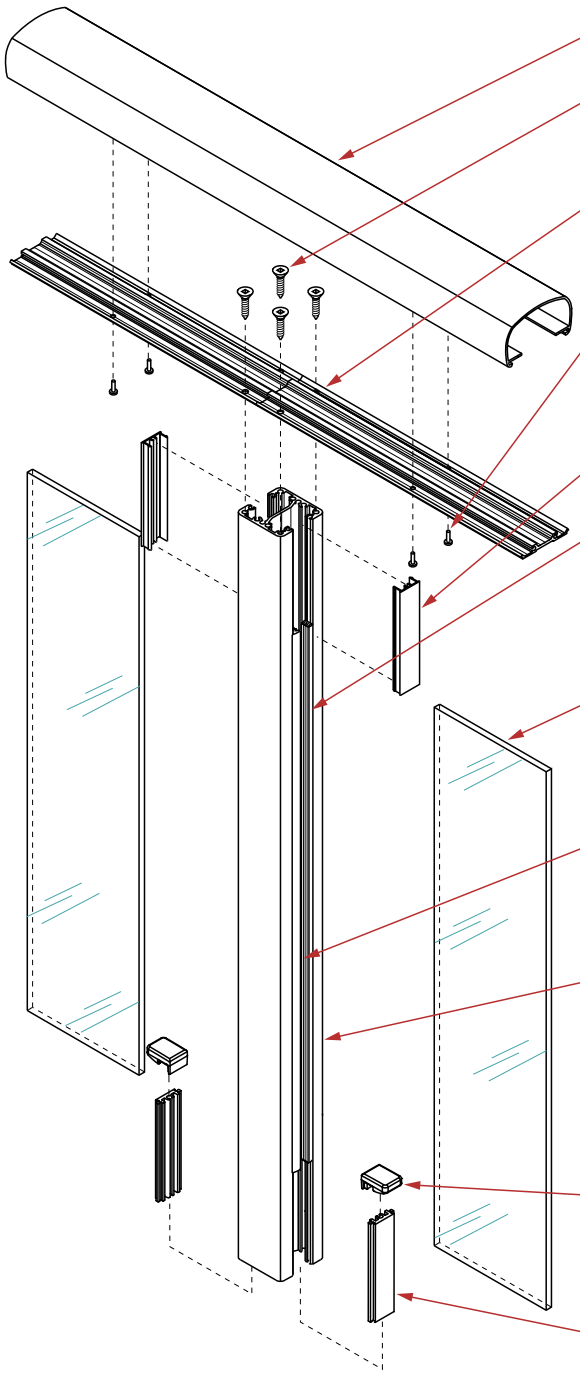

VRT TOP RAIL

FV10-19 SCREWS. 4 per post. Drill size = Ø5.5mm.

DRH INNER TOP RAIL

FS4-4 RIVETS. 1 pair within 150mm from panel ends; and at 1000mm maximum centres between, and on either side of joints in Outer Top Rail. Drill size = Ø3.3mm.

AIR INFILL between glass and Top Rail. Insert after glass installation.

RETAINED GASKET to the outer face of glass, either SRG70 for 6mm and 8mm glass, or SRG40 for 10mm and 12mm glass. Must be slid into post prior to assembly.

TOUGHENED GLASS, of appropriate thickness, depending on the post spacing. Refer to Style Specification. Exposed horizontal edges to be flat polished.

WEDGE GASKET to the inner face of glass, either SWE70 for 6mm glass, SWE50 for 8mm glass, SWE55 for 10mm glass, or SWE35 for 12mm glass.

APS2 or APE2 RECESSED POST. On 90° corners use APQ2 CORNER RECESSED POST

AKS2 BRACKET, to support glass. Attach to AIA insert (press fit). For further detail of bracket attachment for situations, refer to "AKS attachment" pages in Chapter 5.

AIA INSERT for supporting glass by transferring weight down to base plate or substrate.

Refer elsewhere for corners, slopes and other situations not illustrated here.

'SIENA' (ART TOP RAIL)

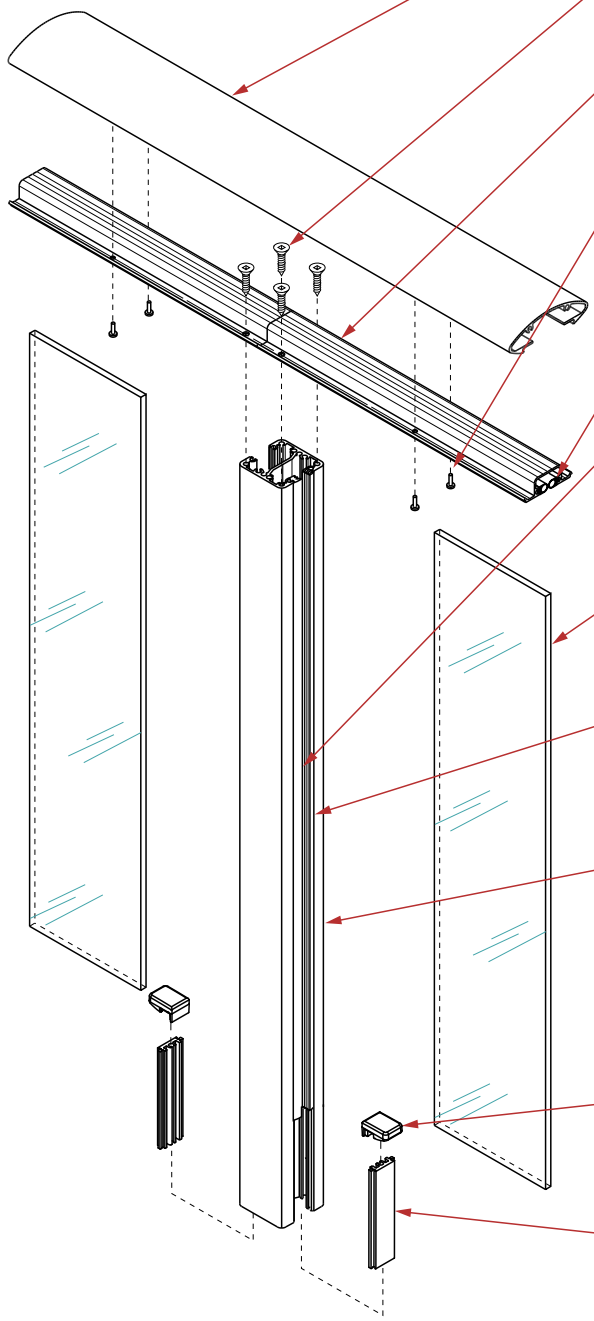

ART TOP RAIL

FV10-19 SCREWS. 4 per post. Drill size = Ø5.5mm.

PZT INNER TOP RAIL

FS4-4 RIVETS. 1 pair within 150mm from panel ends; and at 1000mm maximum centres between, and on either side of joints in Outer Top Rail. Drill size = Ø3.3mm.

SRD RETAINED GASKET both sides of glass. Must be slid into rail prior to assembly.

RETAINED GASKET to the outer face of glass, either SRG70 for 6mm and 8mm glass, or SRG40 for 10mm and 12mm glass. Must be slid into post prior to assembly.

TOUGHENED GLASS, of appropriate thickness, depending on the post spacing. Refer to Style Specification. Exposed horizontal edges to be flat polished.

WEDGE GASKET to the inner face of glass, either SWE70 for 6mm glass, SWE50 for 8mm glass, SWE55 for 10mm glass, or SWE35 for 12mm glass.

APS2 or APE2 RECESSED POST. On 90° corners use APQ2 CORNER RECESSED POST

SETTING BLOCKS to back of glazing cavity, just above the AKS plate. Refer to table in Chapter 5 for type and quantity.

AKS2 BRACKET, to support glass. Attach to AIA insert (press fit). For further detail of bracket attachment for situations, refer to "AKS attachment" pages in Chapter 5.

AIA INSERT for supporting glass by transferring weight down to base plate or substrate.

Refer elsewhere for corners, slopes and other situations not illustrated here.

'SIENA' (PRR TOP RAIL)

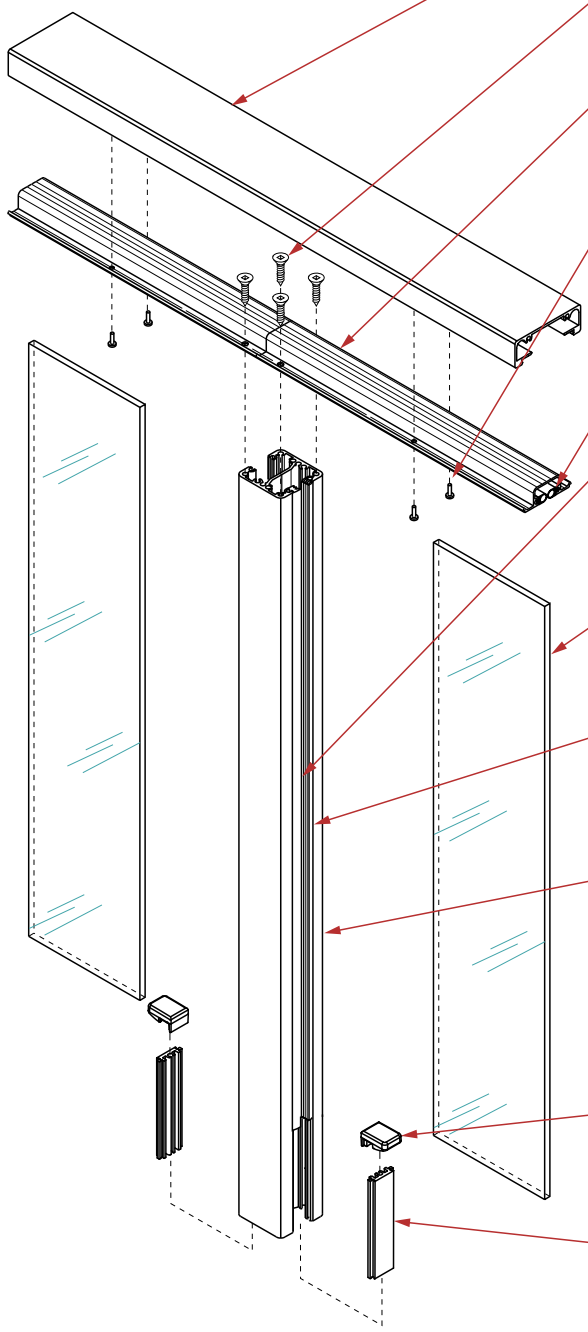

PRR TOP RAIL

FV10-19 SCREWS. 4 per post. Drill size = Ø5.5mm.

PZT INNER TOP RAIL

FS4-4 RIVETS. 1 pair within 150mm from panel ends; and at 1000mm maximum centres between, and on either side of joints in Outer Top Rail. Drill size = Ø3.3mm.

SRD RETAINED GASKET both sides of glass. Must be slid into rail prior to assembly.

RETAINED GASKET to the outer face of glass, either SRG70 for 6mm and 8mm glass, or SRG40 for 10mm and 12mm glass. Must be slid into post prior to assembly.

TOUGHENED GLASS, of appropriate thickness, depending on the post spacing. Refer to Style Specification. Exposed horizontal edges to be flat polished.

WEDGE GASKET to the inner face of glass, either SWE70 for 6mm glass, SWE50 for 8mm glass, SWE55 for 10mm glass, or SWE35 for 12mm glass.

APS2 or APE2 RECESSED POST. On 90° corners use APQ2 CORNER RECESSED POST

SETTING BLOCKS to back of glazing cavity, just above the AKS plate. Refer to table in Chapter 5 for type and quantity.

AKS2 BRACKET, to support glass. Attach to AIA insert (press fit). For further detail of bracket attachment for situations, refer to "AKS attachment" pages in Chapter 5.

AIA INSERT for supporting glass by transferring weight down to base plate or substrate.

Refer elsewhere for corners, slopes and other situations not illustrated here.

'SIENA' (VRE TOP RAIL)

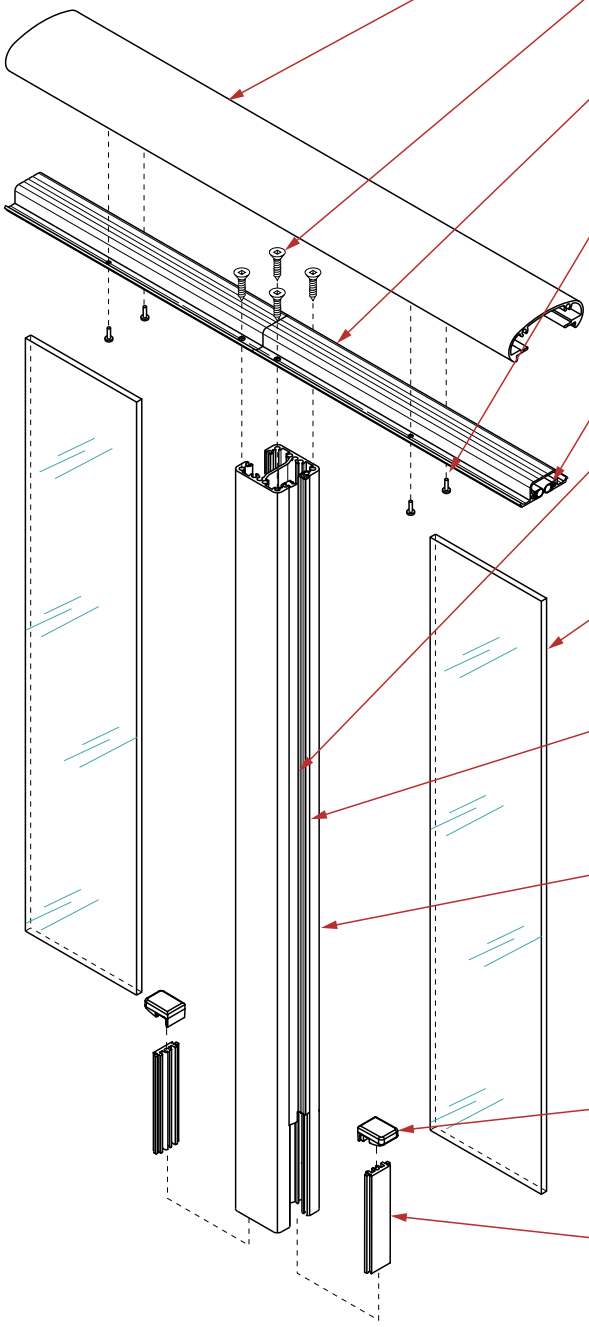

VRE TOP RAIL

FV10-19 SCREWS. 4 per post. Drill size = Ø5.5mm.

PZT INNER TOP RAIL

FS4-4 RIVETS. 1 pair within 150mm from panel ends; and at 1000mm maximum centres between, and on either side of joints in Outer Top Rail. Drill size = Ø3.3mm.

SRD RETAINED GASKET both sides of glass. Must be slid into rail prior to assembly.

RETAINED GASKET to the outer face of glass, either SRG70 for 6mm and 8mm glass, or SRG40 for 10mm and 12mm glass. Must be slid into post prior to assembly.

TOUGHENED GLASS, of appropriate thickness, depending on the post spacing. Refer to Style Specification. Exposed horizontal edges to be flat polished.

WEDGE GASKET to the inner face of glass, either SWE70 for 6mm glass, SWE50 for 8mm glass, SWE55 for 10mm glass, or SWE35 for 12mm glass.

APS2 or APE2 RECESSED POST. On 90° corners use APQ2 CORNER RECESSED POST

SETTING BLOCKS to back of glazing cavity, just above the AKS plate. Refer to table in Chapter 5 for type and quantity.

AKS2 BRACKET, to support glass. Attach to AIA insert (press fit). For further detail of bracket attachment for situations, refer to "AKS attachment" pages in Chapter 5.

AIA INSERT for supporting glass by transferring weight down to base plate or substrate.

Refer elsewhere for corners, slopes and other situations not illustrated here.

'SIENA' (VRR TOP RAIL)

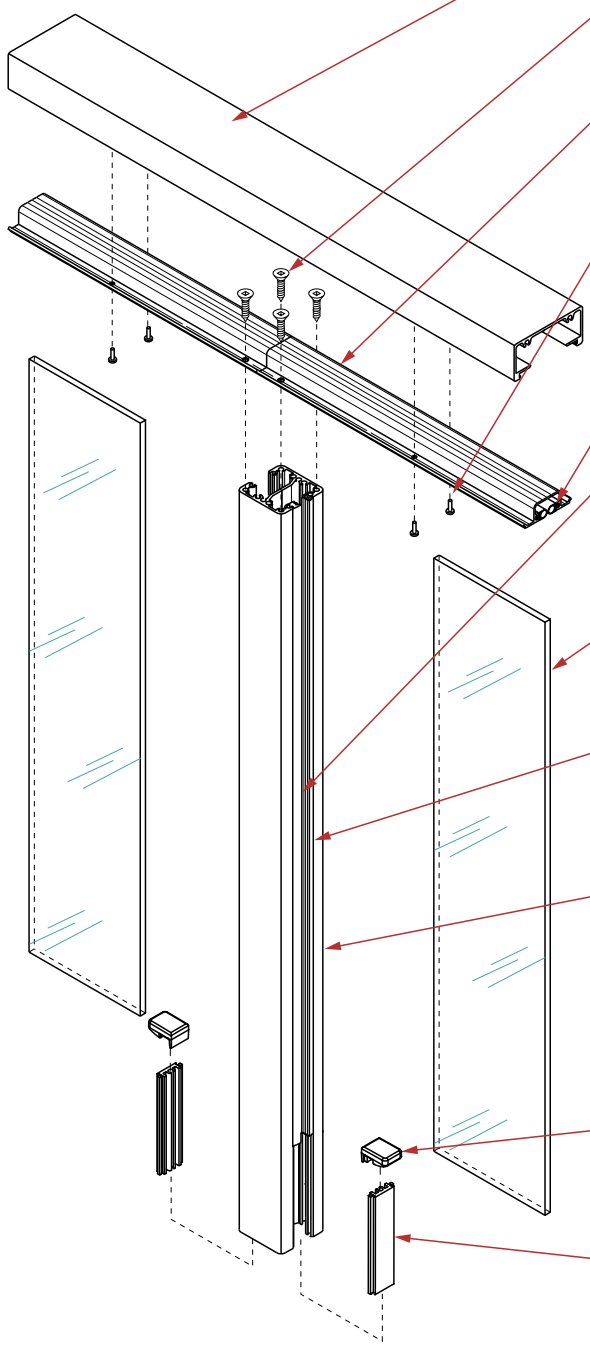

VRR TOP RAIL

FV10-19 SCREWS. 4 per post. Drill size = Ø5.5mm.

PZT INNER TOP RAIL

FS4-4 RIVETS. 1 pair within 150mm from panel ends; and at 1000mm maximum centres between, and on either side of joints in Outer Top Rail. Drill size = Ø3.3mm.

SRD RETAINED GASKET both sides of glass. Must be slid into rail prior to assembly.

RETAINED GASKET to the outer face of glass, either SRG70 for 6mm and 8mm glass, or SRG40 for 10mm and 12mm glass. Must be slid into post prior to assembly.

TOUGHENED GLASS, of appropriate thickness, depending on the post spacing. Refer to Style Specification. Exposed horizontal edges to be flat polished.

WEDGE GASKET to the inner face of glass, either SWE70 for 6mm glass, SWE50 for 8mm glass, SWE55 for 10mm glass, or SWE35 for 12mm glass.

APS2 or APE2 RECESSED POST. On 90° corners use APQ2 CORNER RECESSED POST

SETTING BLOCKS to back of glazing cavity, just above the AKS plate. Refer to table in Chapter 5 for type and quantity.

AKS2 BRACKET, to support glass. Attach to AIA insert (press fit). For further detail of bracket attachment for situations, refer to "AKS attachment" pages in Chapter 5.

AIA INSERT for supporting glass by transferring weight down to base plate or substrate.

Refer elsewhere for corners, slopes and other situations not illustrated here.

'SIENA' (VRT TOP RAIL)

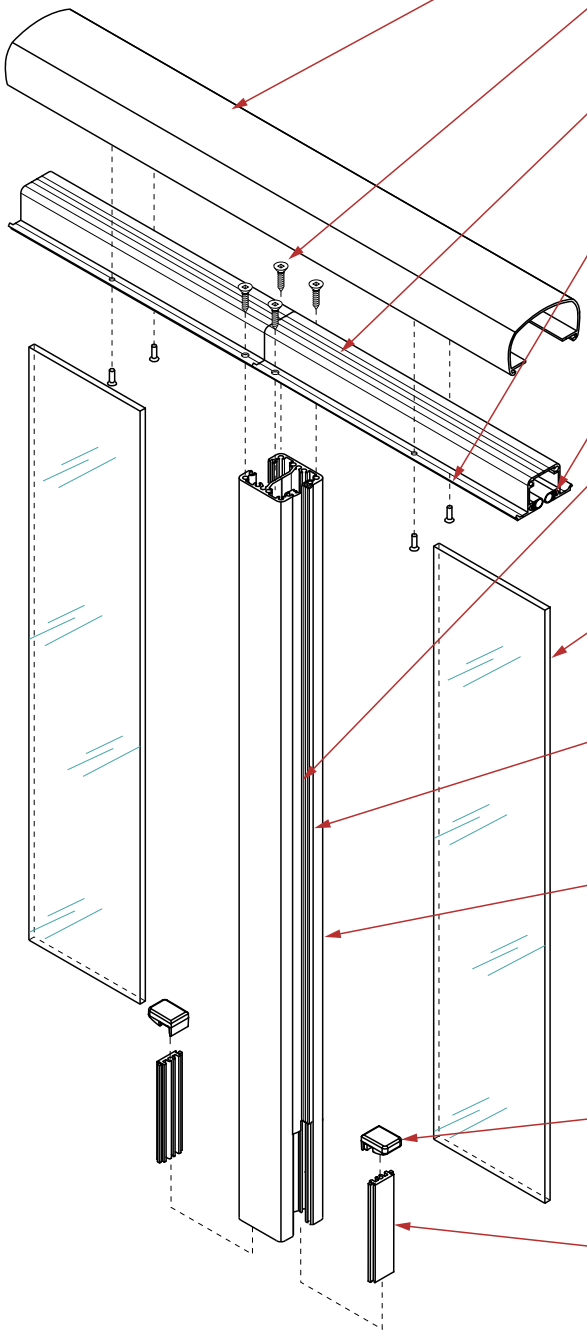

VRT TOP RAIL

FV10-19 SCREWS. 4 per post. Drill size = Ø5.5mm.

DZT3 INNER TOP RAIL

FS4-4 RIVETS. 1 pair within 150mm from panel ends; and at 1000mm maximum centres between, and on either side of joints in Outer Top Rail. Drill size = Ø3.3mm.

SRD RETAINED GASKET both sides of glass. Must be slid into rail prior to assembly.

RETAINED GASKET to the outer face of glass, either SRG70 for 6mm and 8mm glass, or SRG40 for 10mm and 12mm glass. Must be slid into post prior to assembly.

TOUGHENED GLASS, of appropriate thickness, depending on the post spacing. Refer to Style Specification. Exposed horizontal edges to be flat polished.

WEDGE GASKET to the inner face of glass, either SWE70 for 6mm glass, SWE50 for 8mm glass, SWE55 for 10mm glass, or SWE35 for 12mm glass.

APS2 or APE2 RECESSED POST. On 90° corners use APQ2 CORNER RECESSED POST

AKS2 BRACKET, to support glass. Attach to AIA insert (press fit). For further detail of bracket attachment for situations, refer to "AKS attachment" pages in Chapter 5.

AIA INSERT for supporting glass by transferring weight down to base plate or substrate.

Refer elsewhere for corners, slopes and other situations not illustrated here.

CHAPTER 5 - FABRICATION & INSTALLATION

Site measuring - General guide pg143-144
Drill guide for connectors to posts pg145
VIH Stiffener required for side fixing posts pg146

VD.25.05T 'Avon' (ART Top Rail) - Vertical Dimensions pg147
VD.25.06T 'Avon' (PRR Top Rail) - Vertical Dimensions pg148
VD.25.08T 'Avon' (VRE Top Rail) - Vertical Dimensions pg149
VD.25.12T 'Avon' (VRR Top Rail) - Vertical Dimensions pg150
VD.25.04T 'Avon' (VRT Top Rail) - Vertical Dimensions pg151

VD.30.05T 'Camden' (ART Top Rail) - Vertical Dimensions pg152
VD.30.06T 'Camden' (PRR Top Rail) - Vertical Dimensions pg153
VD.30.08T 'Camden' (VRE Top Rail) - Vertical Dimensions pg154
VD.30.12T 'Camden' (VRR Top Rail) - Vertical Dimensions pg155
VD.30.04T 'Camden' (VRT Top Rail) - Vertical Dimensions pg156

VD.40.05T 'Spectra' (ART Top Rail) - Vertical Dimensions pg157
VD.40.06T 'Spectra' (PRR Top Rail) - Vertical Dimensions pg158
VD.40.08T 'Spectra' (VRE Top Rail) - Vertical Dimensions pg159
VD.40.12T 'Spectra' (VRR Top Rail) - Vertical Dimensions pg160
VD.40.04T 'Spectra' (VRT Top Rail) - Vertical Dimensions pg161

VD.41.05T 'Siena' (ART Top Rail) - Vertical Dimensions pg162
VD.41.06T 'Siena' (PRR Top Rail) - Vertical Dimensions pg163
VD.41.08T 'Siena' (VRE Top Rail) - Vertical Dimensions pg164
VD.41.12T 'Siena' (VRR Top Rail) - Vertical Dimensions pg165
VD.41.04T 'Siena' (VRT Top Rail) - Vertical Dimensions pg166

Durability pg167-168
VRL3 Lower Rail : Connection to posts pg169
Lower rail connectors for special angles pg170
AKS2 Attachment to recessed posts : TOP mounted situation pg171
AKS2 Attachment to recessed posts : SIDE mounted situation pg172
AKSV Attachment to recessed posts : STAIR TOP mounted situation pg173
Baseplate-to-Post connections and post drainage pg174
Side-fixed post connections and post drainage pg175
Side mounting using DKG2 gutter brackets pg176
Inner rails : Connection to posts pg177-178
Glazing Inner rails : Connection to posts pg179

Corners - General methods pg180
Supported corner joints, VPM2 post : HA = 0°-70° pg181
Supported corner joints, VPM2 post : HA = 90° pg182
Supported corner joints, VPH2 and VPE posts : HA = 0°-75° pg183
Supported corner joints, VPH2 and VPE posts : HA = 75°-89° pg184
Supported corner joints, VPH2 and VPE posts : HA = 90° pg185
Supported corner joints, VPH2 and VPE posts : HA = 90°-135° pg186
Supported corner joints and APS2 posts : HA = 0°-35° pg187
Supported corner joints and APS2 posts : HA = 0°-75° pg188
Supported corner joints, APQ2 post : HA = 75°-89° pg189
Supported corner joints, APQ2 post : HA = 90° pg190
Supported corner joints, APQ2 post : HA = 90°-135° pg191

Epoxy-set anchor studs Installation Specification pg192
Fabrication guide for Framed Glass balustrades styles pg193-196

Installation guide for 'Avon' styles balustrades pg197-199
Installation guide for 'Camden' styles balustrades pg200-206
Installation guide for 'Spectra' styles balustrades pg203-216
Installation guide for 'Siena' styles balustrades pg207-210

UNEX Loading Clasification pg211

SITE MEASURING - GENERAL GUIDE

The following guide applies specifically to site measuring which should show the 4 types of information described below, plus any other relevant data. Also see Page 153 for measuring CURVED Balustrades.

1. PLAN DIMENSIONS

To manufacture a balustrade, the fabricator will need to accurately know the centreline length of the balustrade, and the angle between each run at all corners. Obtaining this centreline length can be achieved by two methods, i.e. "ON-SITE" METHOD, whereby the centreline length is obtained direct from measurements on site; and the "CALCULATION" METHOD, whereby the centreline length is calculated from the deck edge measurements and angles. Below are the procedures for each method. NOTE: the "CALCULATION" METHOD is recommended for all balustrades that are side fixed to the balcony.

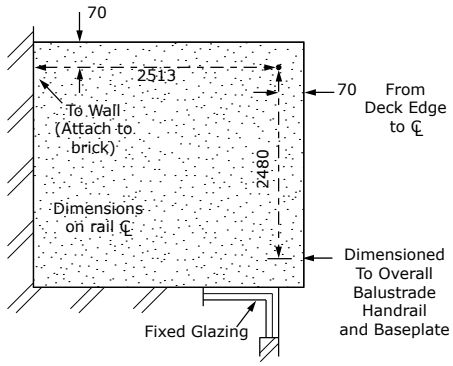

FIG. 1

(i) "ON-SITE" METHOD: It is essential when using this method that the fixing method and baseplate type etc have been finalised. The balustrade centreline can then be marked at an appropriate distance back from the deck edge, ensuring that the fixings will engage with structural joists and nogs on timber decks, or that the fixings will not be less than the minimum edge distance specified for concrete decks. A chalk-line can be useful for marking out the balustrade centreline on the deck. Once this is done, the balustrade centreline lengths can be measured and recorded on a layout plan, along with the angles at all intersection points.

The advantage of this method is that measurements are directly available for the balustrade manufacture, without the need of further calculations, and therefore reducing risk of error etc.

(ii) "CALCULATION" METHOD: Measure and record the length of all deck edges which require balustrades, along with Substrate Details as described on Page 144.

Once the fixing method and baseplate type has been finalised, the balustrade centreline "setback" dimension can also be finalised (i.e. the distance the balustrade centreline is set back from the deck edge). Consequent to this, the balustrade centreline length can be calculated.

Where the deck angles are 90 degrees, this can be done by adding or subtracting the set-backs at each end of the run from the deck edge dimension. For other deck angles, a full size or scale drawing may be required to determine the amount to be added or subtracted to each end. This method of site measuring will need to be used for side fixed balustrades.

At ends, carefully record all relevant details, such as: where measurements are to, the presence of doors or windows etc. Figure 1 shows a typical layout plan and dimensions.

(continued on following Page)

SITE MEASURING - GENERAL GUIDE - (CONT'D)

2. SUBSTRATE DETAILS

These describe the building structure at all points to which the balustrade attaches. Generally the best presentation of deck structure is given by dimensioned cross-sections of the deck edges; See Figure 2 for a typical cross-section.

Where attaching to walls or columns, ensure adequate solid fixing is available. Check these surfaces for plumb, and record any discrepancy.

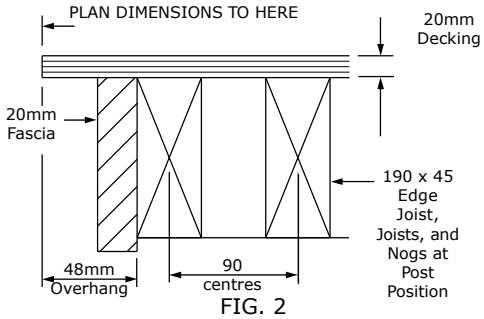

FIG. 2

3. CORNER ANGLES

On the layout plan, record the angles of all the corners. Measure these angles using an electronic protractor or similar.

If such an instrument is not available the angle can be determined by measuring a fixed amount (say 500mm) from the corner along both deck edges, marking these points and measuring the distance between them. By recording all three dimensions, the deck angle can then be accurately reproduced in the factory when fabricating the balustrade. Figure 3 shows various methods of recording the corner angle measurements.

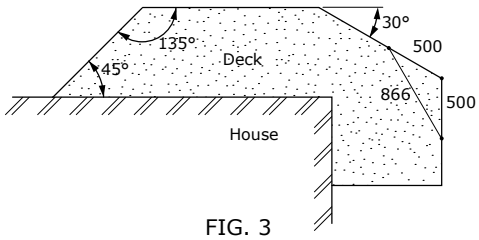

FIG. 3

4. CHANGES IN LEVEL

Note and record all changes in level.
(i) MAJOR CHANGES, e.g.-Steps or ramps.
(ii) MINOR CHANGES, e.g.-due to fall, sag in the deck or to general unevenness. These should be allowed for by varying each post length to obtain a straight and level top rail with the minimum specified rail height at the highest point in the deck. This generally necessitates a check on the deck level at every post position, as apparently flat decks can have significant variations in level.
The relative level of different post positions on the deck can be determined with a builders level and staff. Ensure that the zero end of the staff is on the deck. By reading on the staff the distance from the deck to the line of sight of the instrument, and recording at each position, the required length of each post can be determined.

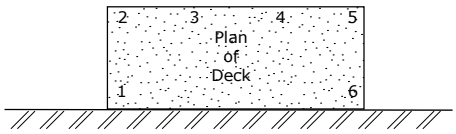

Point	Staff Reading
1	1500
2	1525
3	1520
4	1517
5	1522
6	1495

FIG. 4

The same procedure can be carried out using a laser level to provide the horizontal line of sight. It is convenient to identify each post position on the layout plan with a number, i.e. 1, 2, 3 etc, and show the staff readings in a table adjacent to each post reference. See Figure 4. In this example, Point 6 is the highest point on the deck, and Point 2 is the lowest, with a difference of 30mm.

DRILL GUIDE FOR CONNECTORS TO POSTS

This page describes the method of use of Drill Jig Part No. TJN-AL. This jig may be used to accurately drill square or rectangular 50mm posts, (including VPC, VPE, VPH2, and VPM2 Posts) for ANG Series lower Rail Connectors. It can only be used for connectors attaching perpendicularly to the posts.

NOTES ON USE:

1. The Jig is seated on the Post faces as shown, and the two appropriate holes are drilled, Ø4.1mm.
2. The Jig may be used to accurately position the holes from the post top by screwing to the jig as a spacer an offcut of baluster which has been trimmed to the correct length. Check this length carefully; remembering that balusters protrude above the post top by 4mm with DRI2 Inner Rails and 1mm for DRH Inner Rails.
3. The upper end of the baluster may be positioned on the post top by screwing an offcut of Inner Rail (DRI2 or DRH) to it. For single top rail baluster styles, if the offcut is of the type actually used on the job, then the Baluster Spacer length will equal the length of the balustrade balusters where the Lower Rail is VRL3, as the jig depth equals the depth of a VRL3 Rail.
4. The jig may be used for balustrades with a Mid Rail by using a short spacer for the mid rail, and a longer spacer for the lower rail. Remember the balusters protrude up beyond the underside of mid-rails, by 4mm (typically for DTS3 Balusters) or 2mm (for DTH Balusters), depending on the DIA Infill orientation.

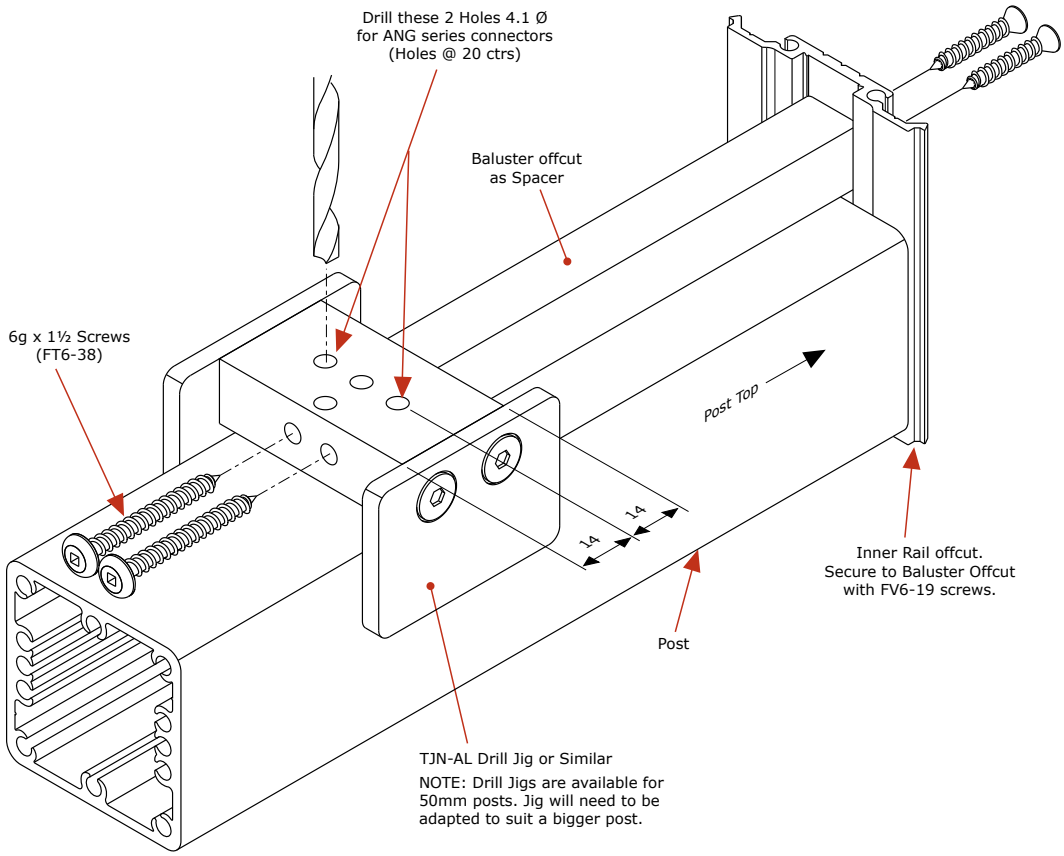

VIH STIFFENER REQUIRED FOR SIDE FIXING POSTS

Hollow posts, such as VPH2 and VPE, used in side-fix applications must be fitted with VIH internal post stiffeners within the fixing zone. These stiffeners help prevent post deformation and provide additional rigidity in this critical area. Note: Glazing posts such as APS2 and APE2 do not require a VIH stiffener, as they feature an internal web for reinforcement. Refer to the relevant fixing details for more information.

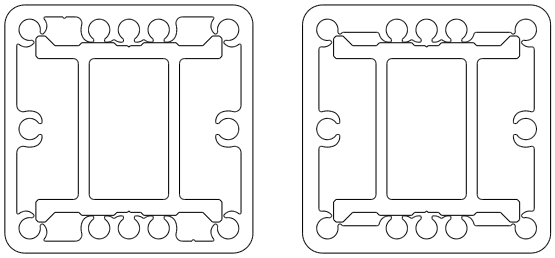

VPH2 Post Illustrated

VPE Post Illustrated

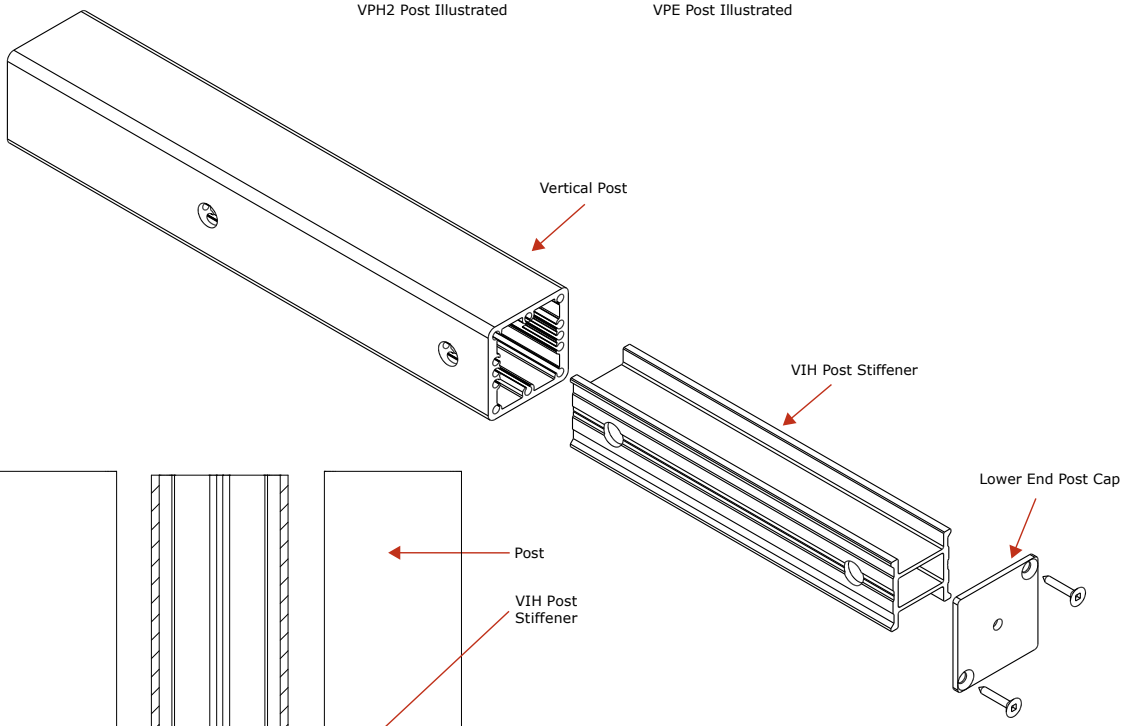

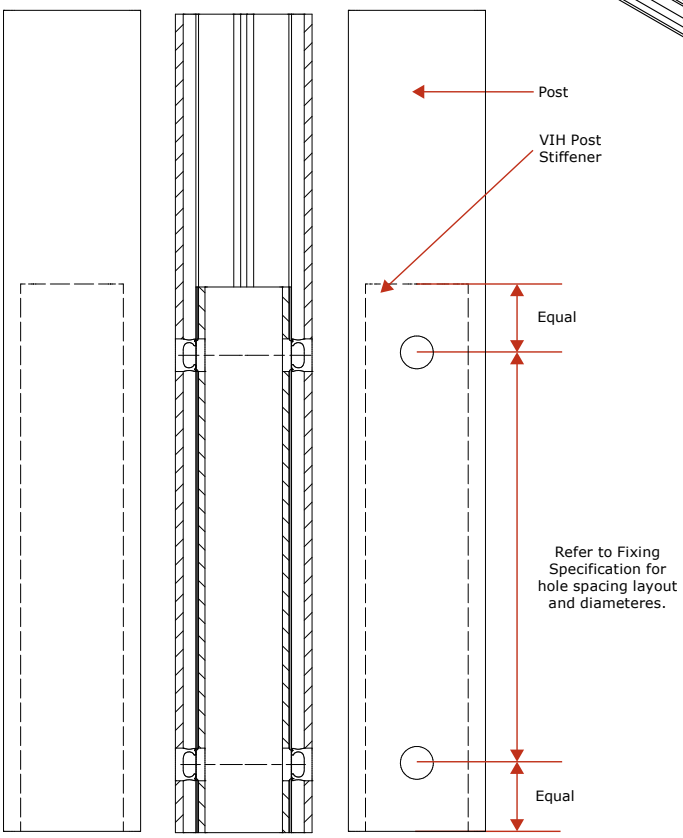

VPE POST and VIH Hole Layout

'AVON' (ART TOP RAIL) - VERTICAL DIMENSIONS

'AVON' (ART TOP RAIL) - VERTICAL DIMENSIONS[1]					
DIMENSION		FORMULA	TYPICAL VALUES (mm)		
HEIGHT	(H)	As specified	1000	1100	1200
UNDERSPACE	(U)	As specified	88[2]	88[2]	88[2]
POST HEIGHT	(PH)	H-38mm	962	1062	1162
LOWER RAIL SET-OUT	(LS)	H-U-40mm	872	972	1072
GLASS HEIGHT	(GH)	LS (or OH+14)	872	972	1072

1. This table applies only with the use of the parts specified below. Post Heights apply only with 12mm thick baseplates for fixing to deck tops.
2. A nominal 88mm Underspace enables the Post Height to be increased by up to 12mm to suit deck level variations, without affecting Baluster Height, or exceeding a 100mm Underspace.
3. Minor dimensions on the drawings have been rounded to the nearest millimetre.

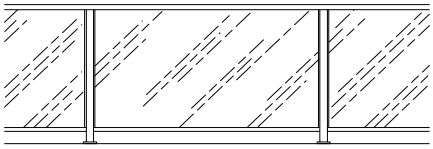

This is a guide for recommended cutting dimensions using the typical extrusions and components illustrated; use of others may require adjustments to the formula and dimensions given here.

REFER TO THE Assembly Specification FOR FURTHER DETAILS

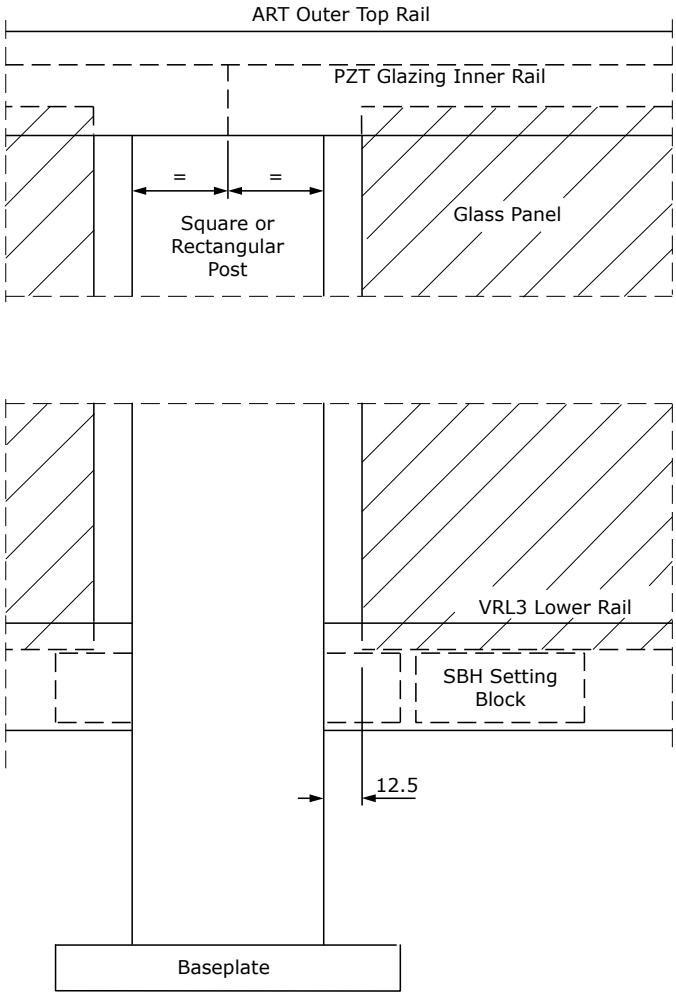

TYPICAL ELEVATION

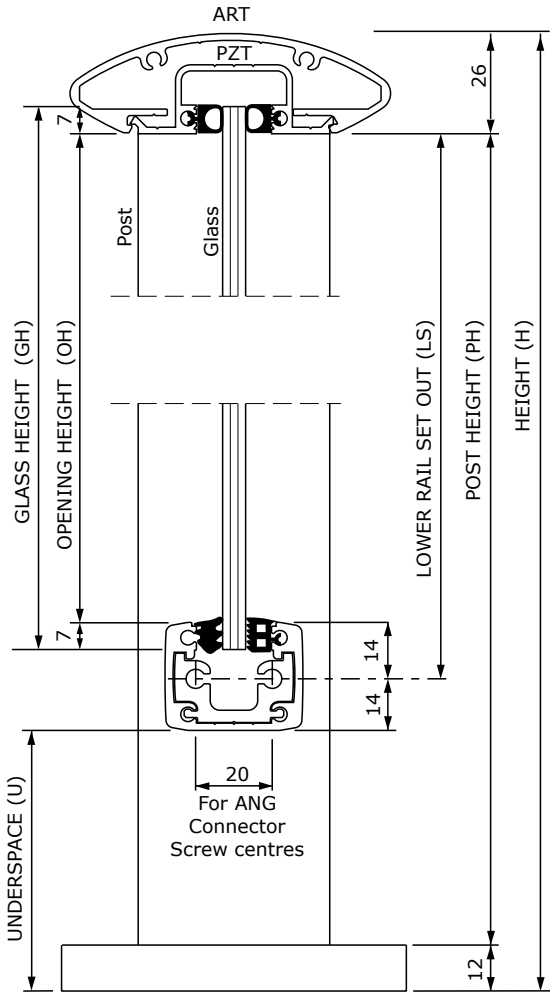

TYPICAL CROSS SECTION

'AVON' (PRR TOP RAIL) - VERTICAL DIMENSIONS

'AVON' (PRR TOP RAIL) - VERTICAL DIMENSIONS[1]					
DIMENSION		FORMULA	TYPICAL VALUES (mm)		
HEIGHT	(H)	As specified	1000	1100	1200
UNDERSPACE	(U)	As specified	88[2]	88[2]	88[2]
POST HEIGHT	(PH)	H-36mm	964	1064	1164
LOWER RAIL SET-OUT	(LS)	H-U-38mm	874	974	1074
GLASS HEIGHT	(GH)	LS (or OH+14)	874	974	1074

1. This table applies only with the use of the parts specified below. Post Heights apply only with 12mm thick baseplates for fixing to deck tops.
2. A nominal 88mm Underspace enables the Post Height to be increased by up to 12mm to suit deck level variations, without affecting Baluster Height, or exceeding a 100mm Underspace.
3. Minor dimensions on the drawings have been rounded to the nearest millimetre.

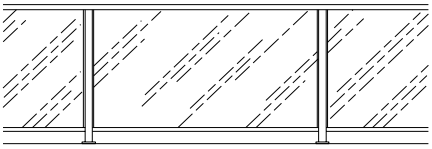

This is a guide for recommended cutting dimensions using the typical extrusions and components illustrated; use of others may require adjustments to the formulae and dimensions given here.

REFER TO THE Assembly Specification FOR FURTHER DETAILS

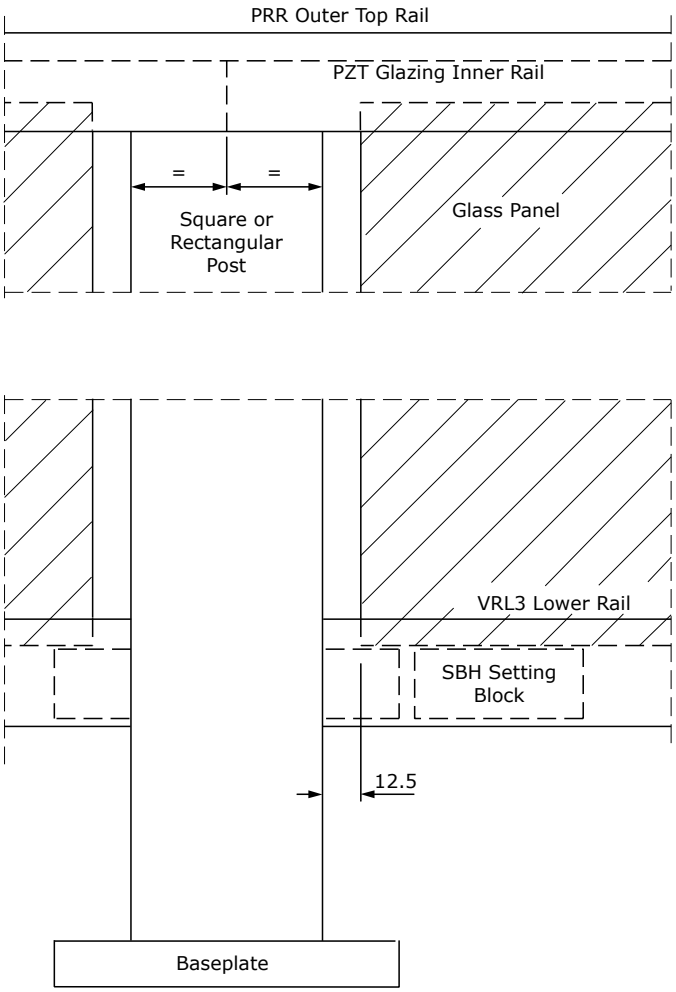

TYPICAL ELEVATION

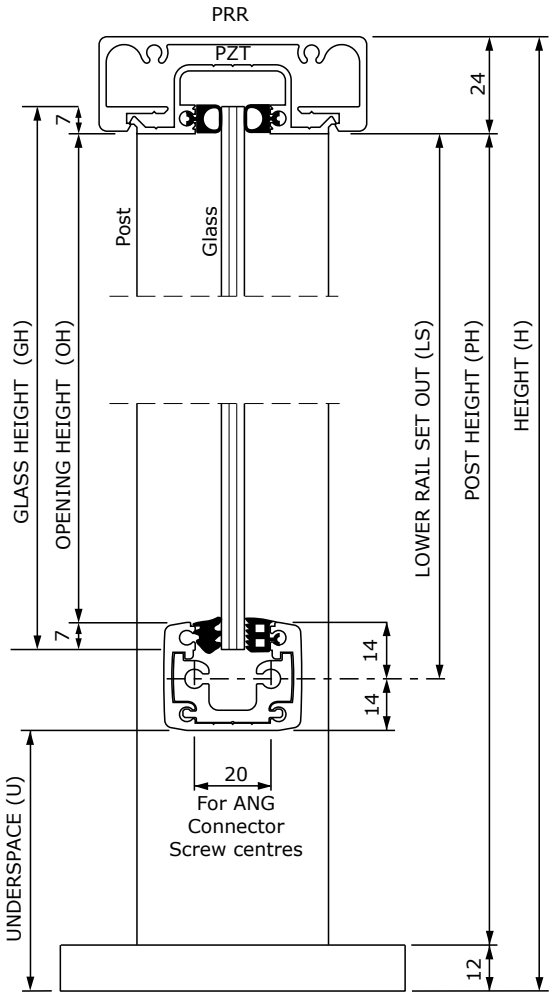

TYPICAL CROSS SECTION

UNEX ARCHITECTURAL BARRIERS
Specifications subject to change without notice
Phone 0800 333 777 | www.unex.co.nz

'AVON' (VRE TOP RAIL) - VERTICAL DIMENSIONS

'AVON' (VRE TOP RAIL) - VERTICAL DIMENSIONS[1]					
DIMENSION		FORMULA	TYPICAL VALUES (mm)		
HEIGHT	(H)	As specified	1000	1100	1200
UNDERSPACE	(U)	As specified	88[2]	88[2]	88[2]
POST HEIGHT	(PH)	H-38mm	962	1062	1162
LOWER RAIL SET-OUT	(LS)	H-U-40mm	872	972	1072
GLASS HEIGHT	(GH)	LS (or OH+14)	872	972	1072

1. This table applies only with the use of the parts specified below. Post Heights apply only with 12mm thick baseplates for fixing to deck tops.
2. A nominal 88mm Underspace enables the Post Height to be increased by up to 12mm to suit deck level variations, without affecting Baluster Height, or exceeding a 100mm Underspace.
3. Minor dimensions on the drawings have been rounded to the nearest millimetre.

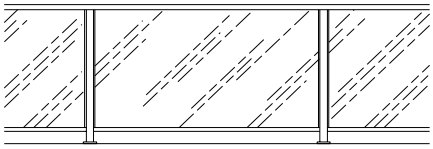

This is a guide for recommended cutting dimensions using the typical extrusions and components illustrated; use of others may require adjustments to the formula and dimensions given here.

REFER TO THE Assembly Specification FOR FURTHER DETAILS

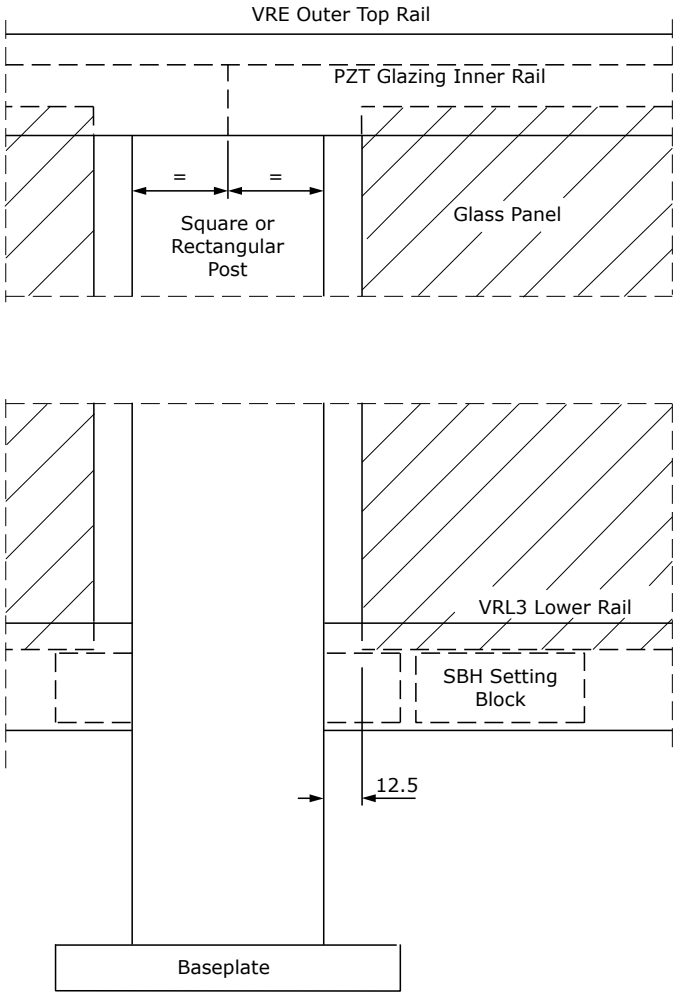

TYPICAL ELEVATION

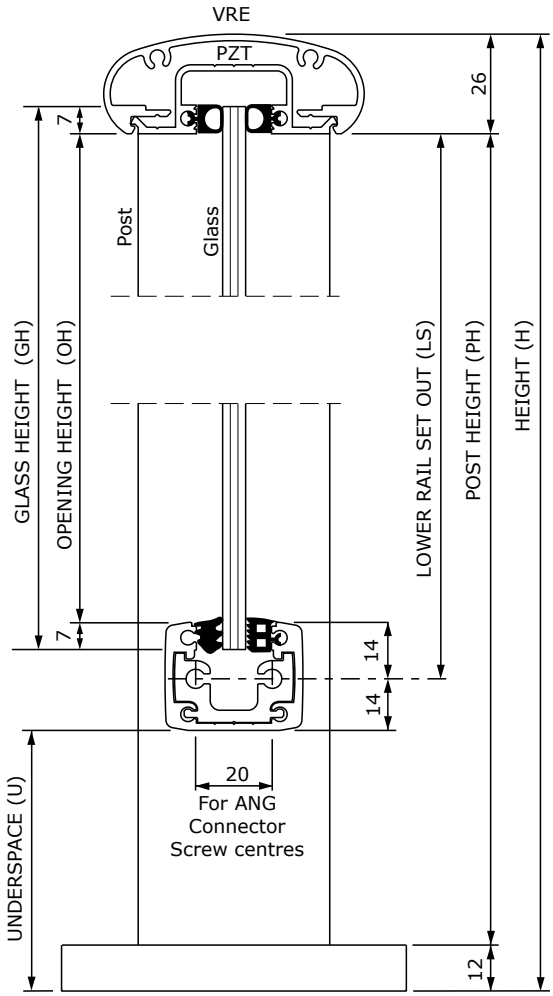

TYPICAL CROSS SECTION

'AVON' (VRR TOP RAIL) - VERTICAL DIMENSIONS

'AVON' (VRR TOP RAIL) - VERTICAL DIMENSIONS[1]					
DIMENSION		FORMULA	TYPICAL VALUES (mm)		
HEIGHT	(H)	As specified	1000	1100	1200
UNDERSPACE	(U)	As specified	88[2]	88[2]	88[2]
POST HEIGHT	(PH)	H-42mm	958	1058	1158
LOWER RAIL SET-OUT	(LS)	H-U-44mm	868	968	1068
GLASS HEIGHT	(GH)	LS (or OH+14)	868	968	1068

1. This table applies only with the use of the parts specified below. Post Heights apply only with 12mm thick baseplates for fixing to deck tops.
2. A nominal 88mm Underspace enables the Post Height to be increased by up to 12mm to suit deck level variations, without affecting Baluster Height, or exceeding a 100mm Underspace.
3. Minor dimensions on the drawings have been rounded to the nearest millimetre.

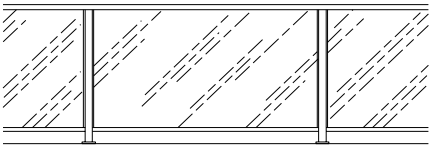

This is a guide for recommended cutting dimensions using the typical extrusions and components illustrated; use of others may require adjustments to the formulae and dimensions given here.

REFER TO THE Assembly Specification FOR FURTHER DETAILS

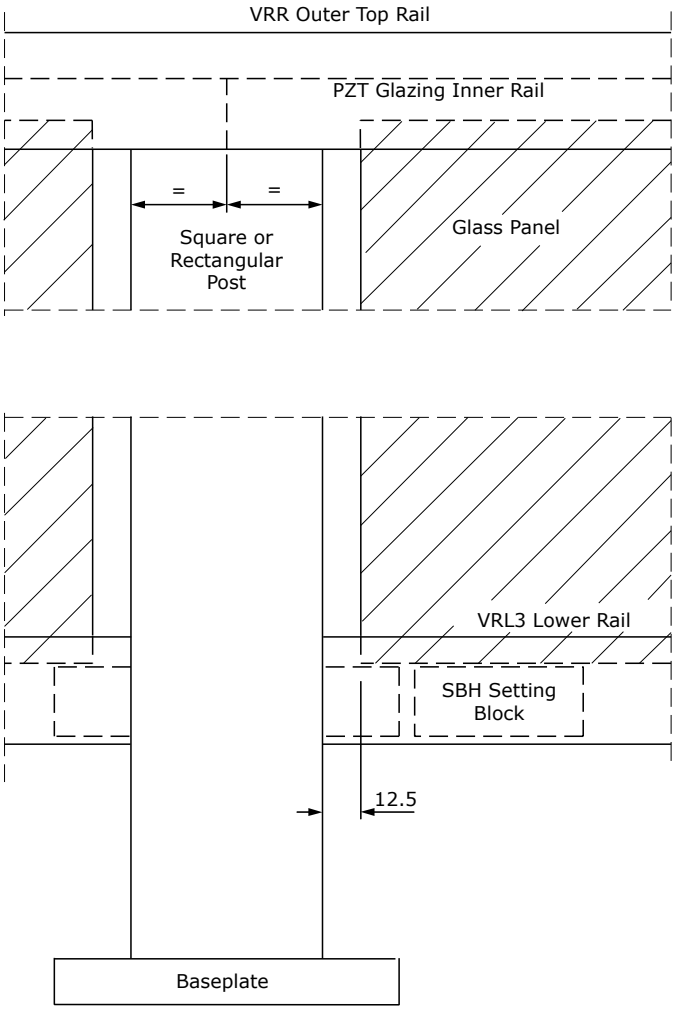

TYPICAL ELEVATION

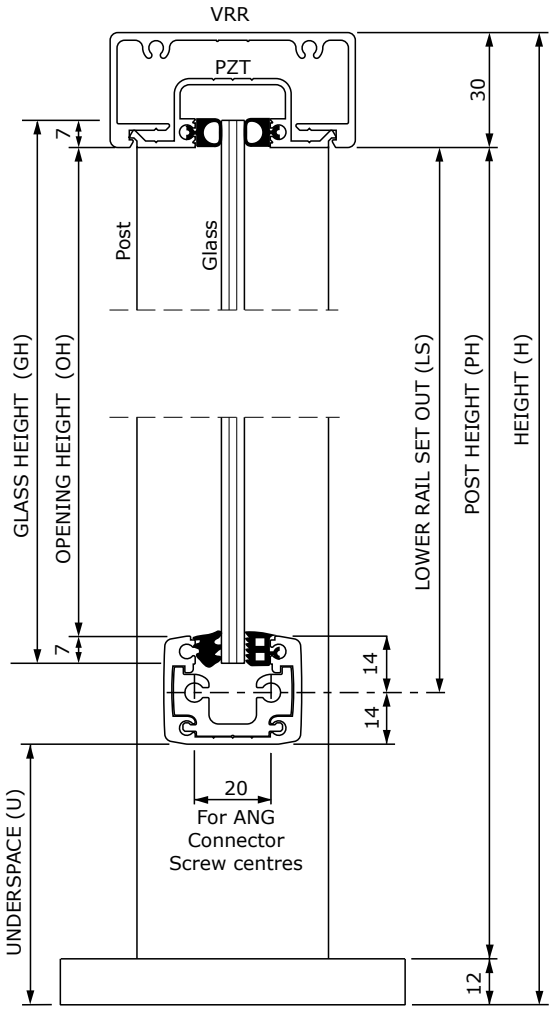

TYPICAL CROSS SECTION

UNEX ARCHITECTURAL BARRIERS
Specifications subject to change without notice
Phone 0800 333 777 | www.unex.co.nz

'AVON' (VRT TOP RAIL) - VERTICAL DIMENSIONS

'AVON' (VRE TOP RAIL) - VERTICAL DIMENSIONS[1]					
DIMENSION		FORMULA	TYPICAL VALUES (mm)		
HEIGHT	(H)	As specified	1000	1100	1200
UNDERSPACE	(U)	As specified	88[2]	88[2]	88[2]
POST HEIGHT	(PH)	H-50mm	950	1050	1150
LOWER RAIL SET-OUT	(LS)	H-U-52mm	860	960	1060
GLASS HEIGHT	(GH)	LS+6 (or OH+20)	866	966	1066

1. This table applies only with the use of the parts specified below. Post Heights apply only with 12mm thick baseplates for fixing to deck tops.
2. A nominal 88mm Underspace enables the Post Height to be increased by up to 12mm to suit deck level variations, without affecting Baluster Height, or exceeding a 100mm Underspace.
3. Minor dimensions on the drawings have been rounded to the nearest millimetre.

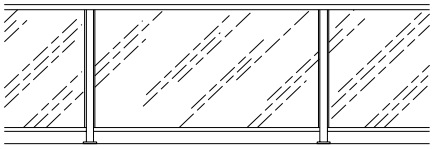

This is a guide for recommended cutting dimensions using the typical extrusions and components illustrated; use of others may require adjustments to the formula and dimensions given here.

REFER TO THE Assembly Specification FOR FURTHER DETAILS

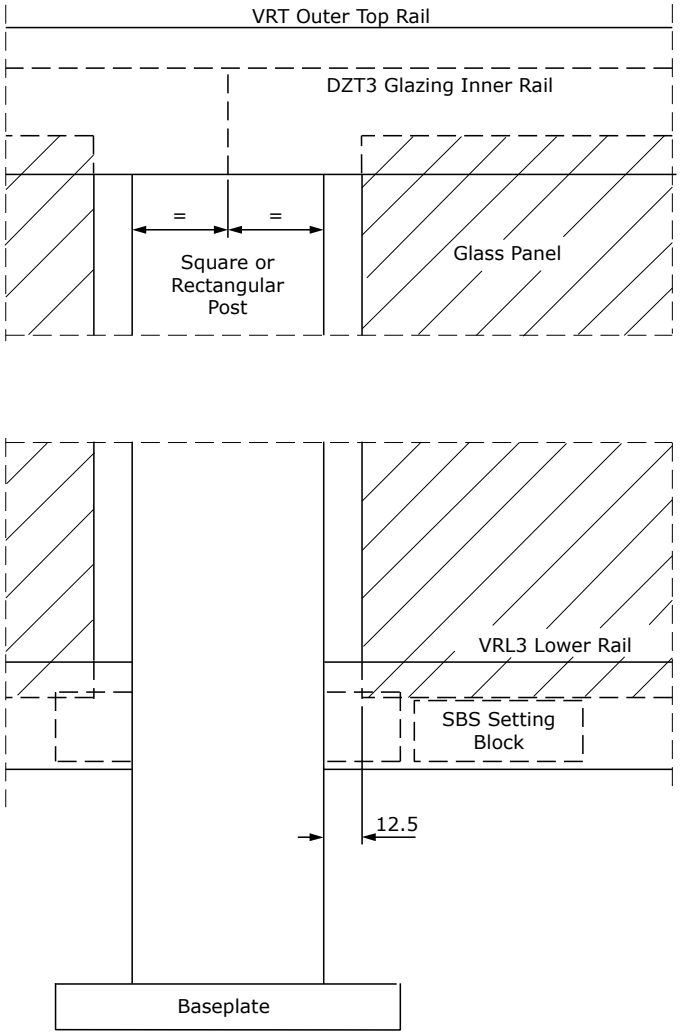

TYPICAL ELEVATION

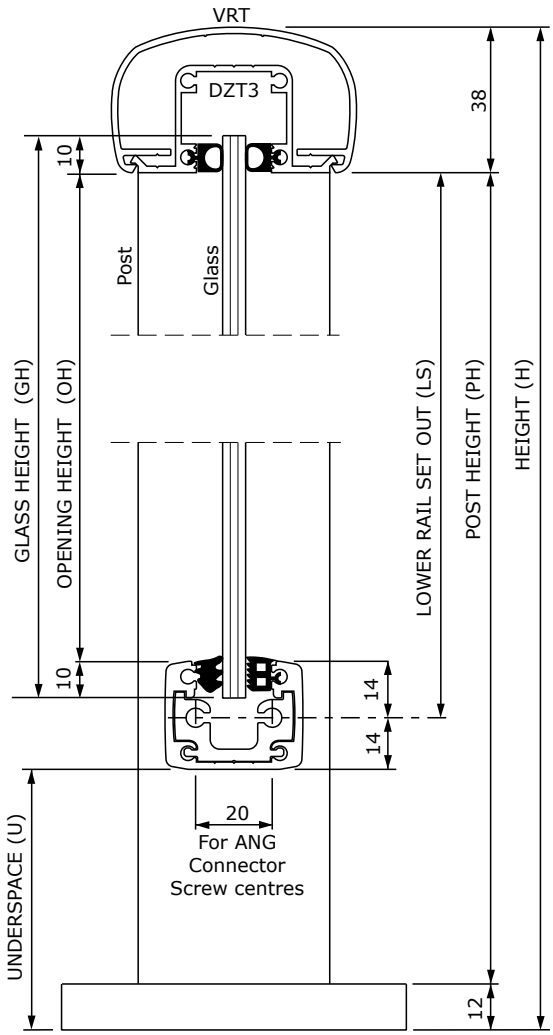

TYPICAL CROSS SECTION

'CAMDEN' (ART TOP RAIL) - VERTICAL DIMENSIONS

'CAMDEN' (ART TOP RAIL) - VERTICAL DIMENSIONS[1]					
DIMENSION		FORMULA	TYPICAL VALUES (mm)		
HEIGHT	(H)	As specified	1000	1100	1200
TOP SPACE	(T)	As specified	99	99	99
UNDERSPACE	(U)	As specified	88[2]	88[2]	88[2]
POST HEIGHT	(PH)	H-38mm	962	1062	1162
INSERT HEIGHT	(IH)	T+1mm	100	100	100
MID RAIL SET-OUT	(MS)	T+13mm	112	112	112
LOWER RAIL SET-OUT	(LS)	H-U-40mm	872	972	1072
GLASS HEIGHT	(GH)	LS-MS-10mm (OR OH+19)	750	850	950

1. This table applies only with the use of the parts specified below. Post Heights apply only with 12mm thick baseplates for fixing to deck tops.
2. A nominal 87mm Underspace enables the Post Height to be increased by up to 13mm to suit deck level variations, without affecting Baluster Height, or exceeding a 100mm Underspace.
3. Minor dimensions on the drawings have been rounded to the nearest millimetre.

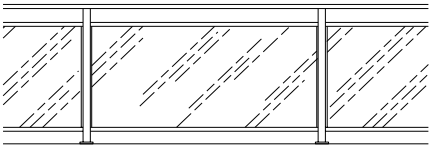

This is a guide for recommended cutting dimensions using the typical extrusions and components illustrated; use of others may require adjustments to the formulae and dimensions given here.

REFER TO THE Assembly Specification FOR FURTHER DETAILS

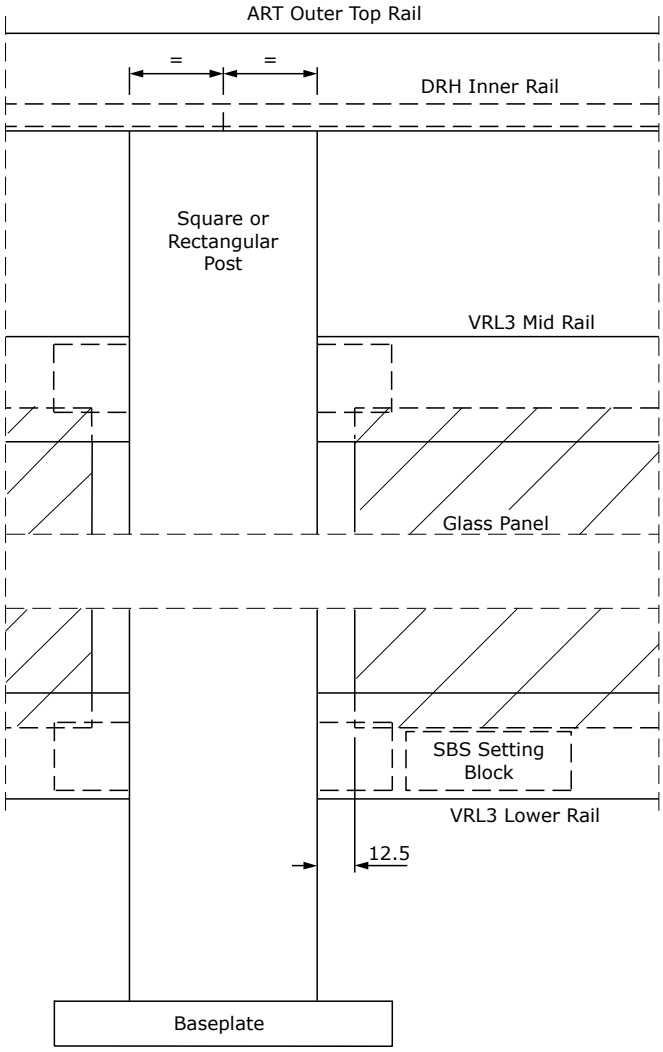

TYPICAL ELEVATION

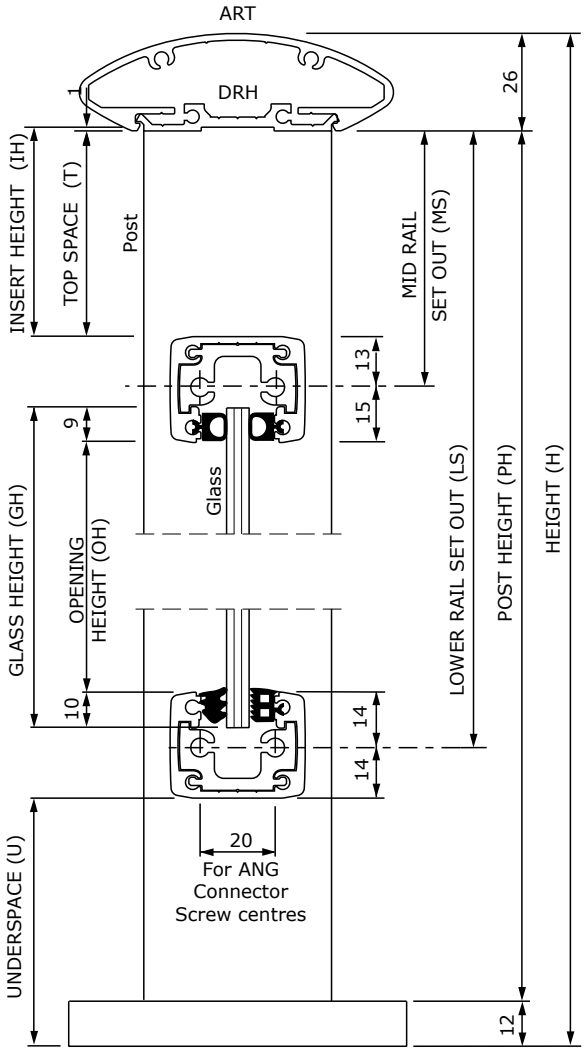

TYPICAL CROSS SECTION

UNEX ARCHITECTURAL BARRIERS
Specifications subject to change without notice
Phone 0800 333 777 | www.unex.co.nz

'CAMDEN' (PRR TOP RAIL) - VERTICAL DIMENSIONS

'CAMDEN' (PRR TOP RAIL) - VERTICAL DIMENSIONS[1]					
DIMENSION		FORMULA	TYPICAL VALUES (mm)		
HEIGHT	(H)	As specified	1000	1100	1200
TOP SPACE	(T)	As specified	99	99	99
UNDERSPACE	(U)	As specified	88[2]	88[2]	88[2]
POST HEIGHT	(PH)	H-36mm	964	1064	1164
INSERT HEIGHT	(IH)	T+1mm	100	100	100
MID RAIL SET-OUT	(MS)	T+13mm	112	112	112
LOWER RAIL SET-OUT	(LS)	H-U-38mm	874	974	1074
GLASS HEIGHT	(GH)	LS-MS-10mm (OR OH+19)	752	852	952

1. This table applies only with the use of the parts specified below. Post Heights apply only with 12mm thick baseplates for fixing to deck tops.
2. A nominal 87mm Underspace enables the Post Height to be increased by up to 13mm to suit deck level variations, without affecting Baluster Height, or exceeding a 100mm Underspace.
3. Minor dimensions on the drawings have been rounded to the nearest millimetre.

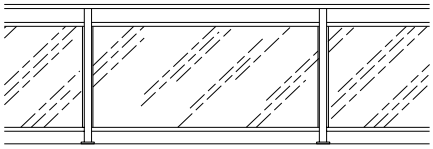

This is a guide for recommended cutting dimensions using the typical extrusions and components illustrated; use of others may require adjustments to the formula and dimensions given here.

REFER TO THE Assembly Specification FOR FURTHER DETAILS

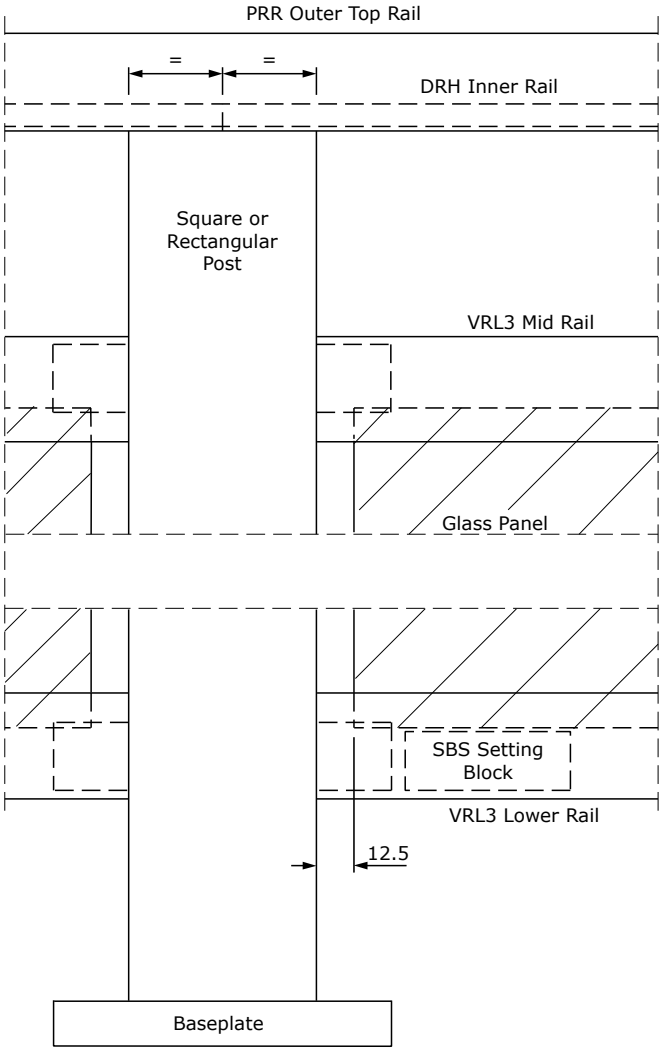

TYPICAL ELEVATION

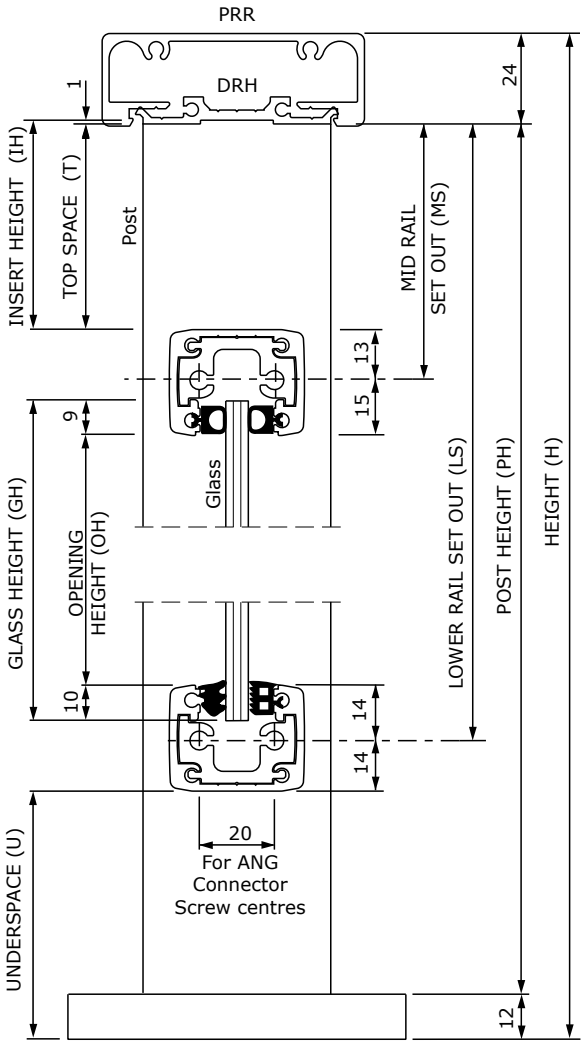

TYPICAL CROSS SECTION

'CAMDEN' (VRE TOP RAIL) - VERTICAL DIMENSIONS

'CAMDEN' (VRE TOP RAIL) - VERTICAL DIMENSIONS[1]					
DIMENSION		FORMULA	TYPICAL VALUES (mm)		
HEIGHT	(H)	As specified	1000	1100	1200
TOP SPACE	(T)	As specified	99	99	99
UNDERSPACE	(U)	As specified	88[2]	88[2]	88[2]
POST HEIGHT	(PH)	H-38mm	962	1062	1162
INSERT HEIGHT	(IH)	T+1mm	100	100	100
MID RAIL SET-OUT	(MS)	T+13mm	112	112	112
LOWER RAIL SET-OUT	(LS)	H-U-40mm	872	972	1072
GLASS HEIGHT	(GH)	LS-MS-10mm (OR OH+19)	750	850	950

1. This table applies only with the use of the parts specified below. Post Heights apply only with 12mm thick baseplates for fixing to deck tops.
2. A nominal 87mm Underspace enables the Post Height to be increased by up to 13mm to suit deck level variations, without affecting Baluster Height, or exceeding a 100mm Underspace.
3. Minor dimensions on the drawings have been rounded to the nearest millimetre.

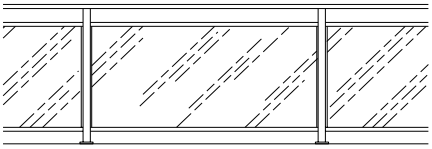

This is a guide for recommended cutting dimensions using the typical extrusions and components illustrated; use of others may require adjustments to the formulae and dimensions given here.

REFER TO THE Assembly Specification FOR FURTHER DETAILS

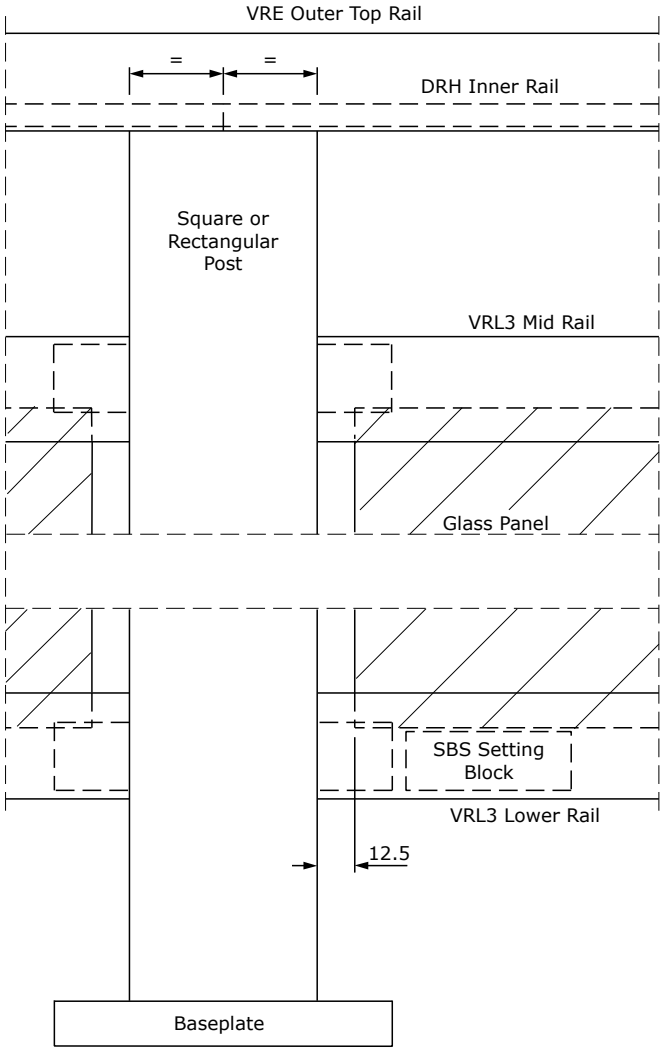

TYPICAL ELEVATION

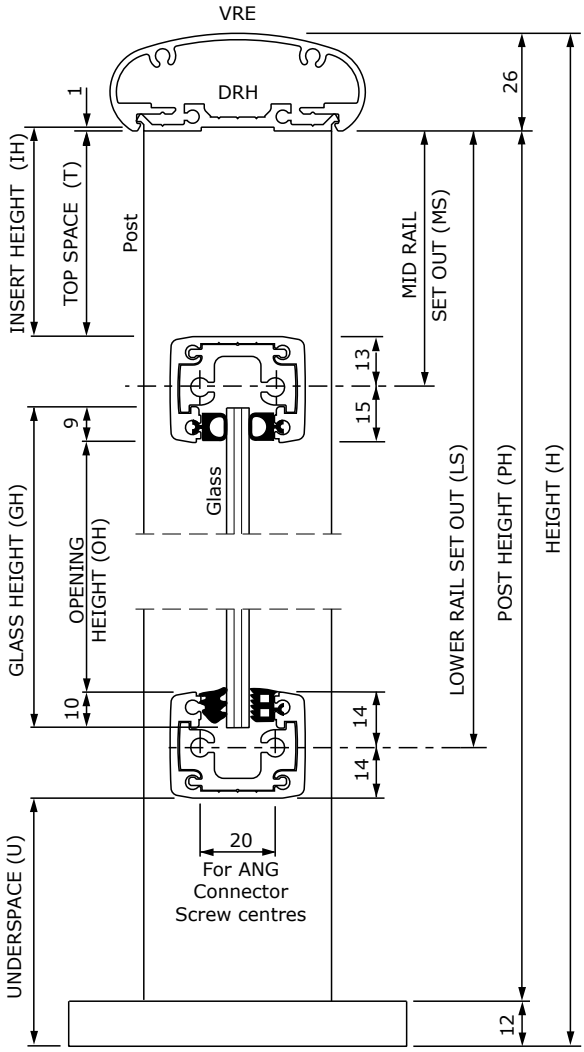

TYPICAL CROSS SECTION

UNEX ARCHITECTURAL BARRIERS
Specifications subject to change without notice
Phone 0800 333 777 | www.unex.co.nz

'CAMDEN' (VRR TOP RAIL) - VERTICAL DIMENSIONS

'CAMDEN' (VRR TOP RAIL) - VERTICAL DIMENSIONS[1]					
DIMENSION		FORMULA	TYPICAL VALUES (mm)		
HEIGHT	(H)	As specified	1000	1100	1200
TOP SPACE	(T)	As specified	99	99	99
UNDERSPACE	(U)	As specified	88[2]	88[2]	88[2]
POST HEIGHT	(PH)	H-42mm	958	1058	1158
INSERT HEIGHT	(IH)	T+1mm	100	100	100
MID RAIL SET-OUT	(MS)	T+13mm	112	112	112
LOWER RAIL SET-OUT	(LS)	H-U-44mm	868	968	1068
GLASS HEIGHT	(GH)	LS-MS-10mm (OR OH+19)	746	846	946

1. This table applies only with the use of the parts specified below. Post Heights apply only with 12mm thick baseplates for fixing to deck tops.
2. A nominal 87mm Underspace enables the Post Height to be increased by up to 13mm to suit deck level variations, without affecting Baluster Height, or exceeding a 100mm Underspace.
3. Minor dimensions on the drawings have been rounded to the nearest millimetre.

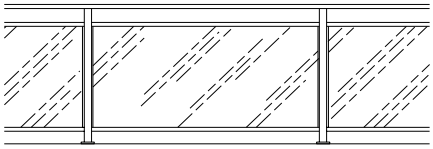

This is a guide for recommended cutting dimensions using the typical extrusions and components illustrated; use of others may require adjustments to the formula and dimensions given here.

REFER TO THE Assembly Specification FOR FURTHER DETAILS

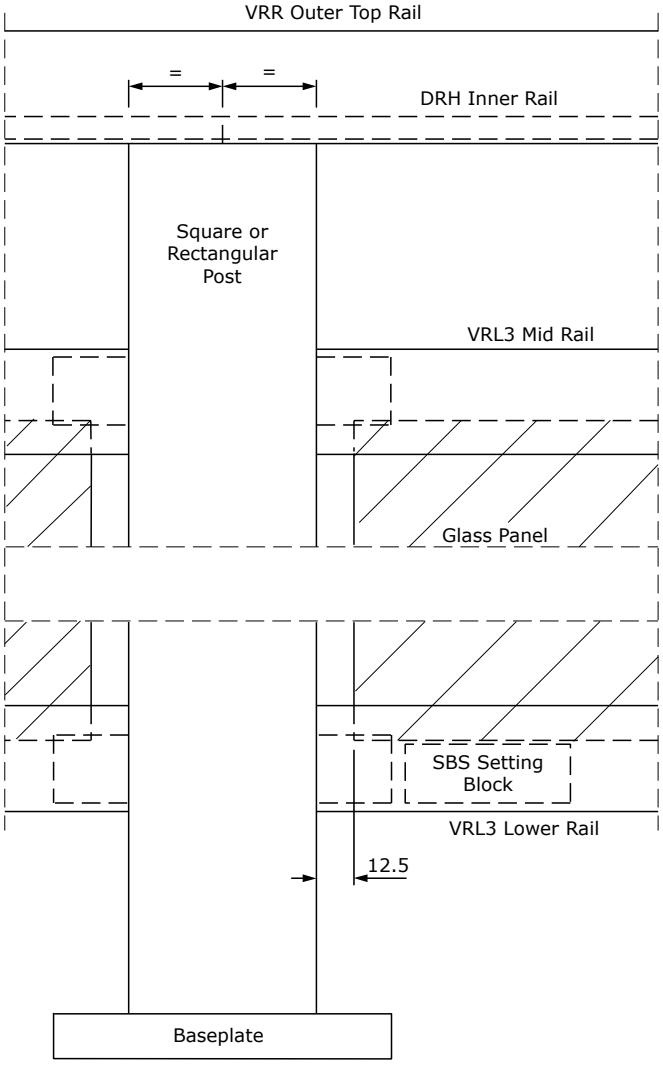

TYPICAL ELEVATION

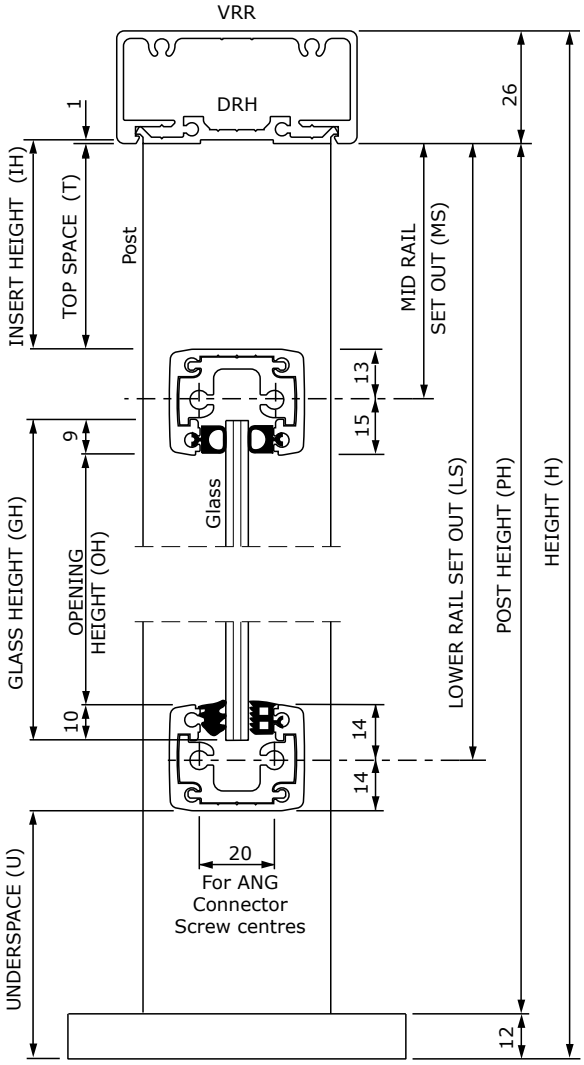

TYPICAL CROSS SECTION

'CAMDEN' (VRT TOP RAIL) - VERTICAL DIMENSIONS

'CAMDEN' (VRT TOP RAIL) - VERTICAL DIMENSIONS[1]					
DIMENSION		FORMULA	TYPICAL VALUES (mm)		
HEIGHT	(H)	As specified	1000	1100	1200
TOP SPACE	(T)	As specified	99	99	99
UNDERSPACE	(U)	As specified	88[2]	88[2]	88[2]
POST HEIGHT	(PH)	H-50mm	950	1050	1150
INSERT HEIGHT	(IH)	T+1mm	100	100	100
MID RAIL SET-OUT	(MS)	T+13mm	112	112	112
LOWER RAIL SET-OUT	(LS)	H-U-52mm	860	960	1060
GLASS HEIGHT	(GH)	LS-MS-10mm (OR OH+19)	738	838	938

1. This table applies only with the use of the parts specified below. Post Heights apply only with 12mm thick baseplates for fixing to deck tops.
2. A nominal 87mm Underspace enables the Post Height to be increased by up to 13mm to suit deck level variations, without affecting Baluster Height, or exceeding a 100mm Underspace.
3. Minor dimensions on the drawings have been rounded to the nearest millimetre.

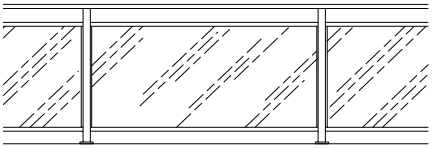

This is a guide for recommended cutting dimensions using the typical extrusions and components illustrated; use of others may require adjustments to the formulae and dimensions given here.

REFER TO THE Assembly Specification FOR FURTHER DETAILS

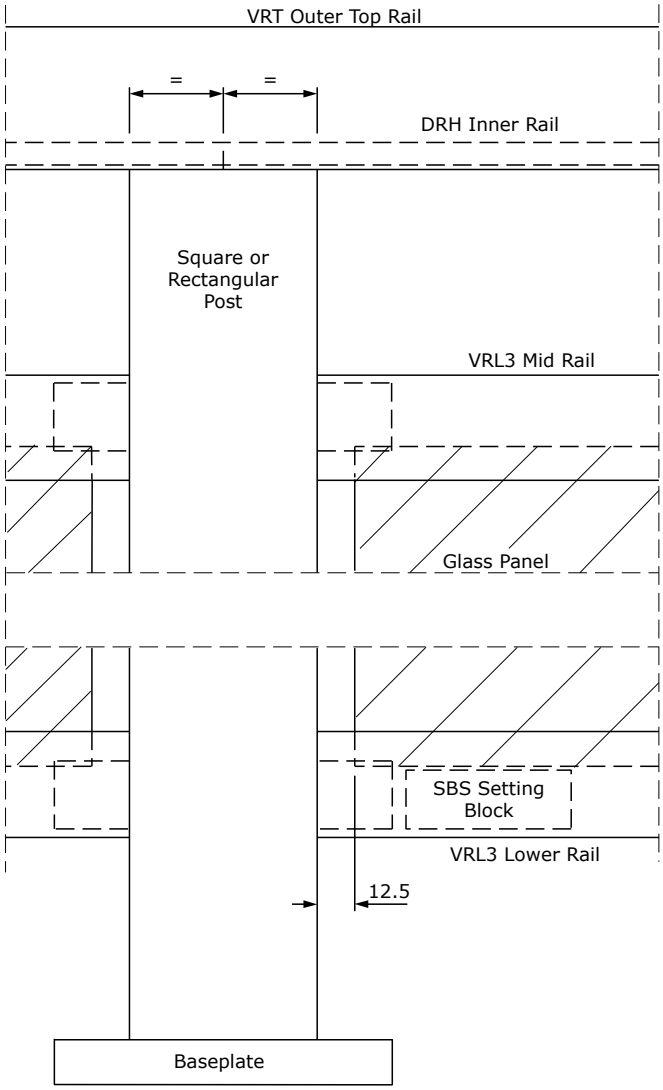

TYPICAL ELEVATION

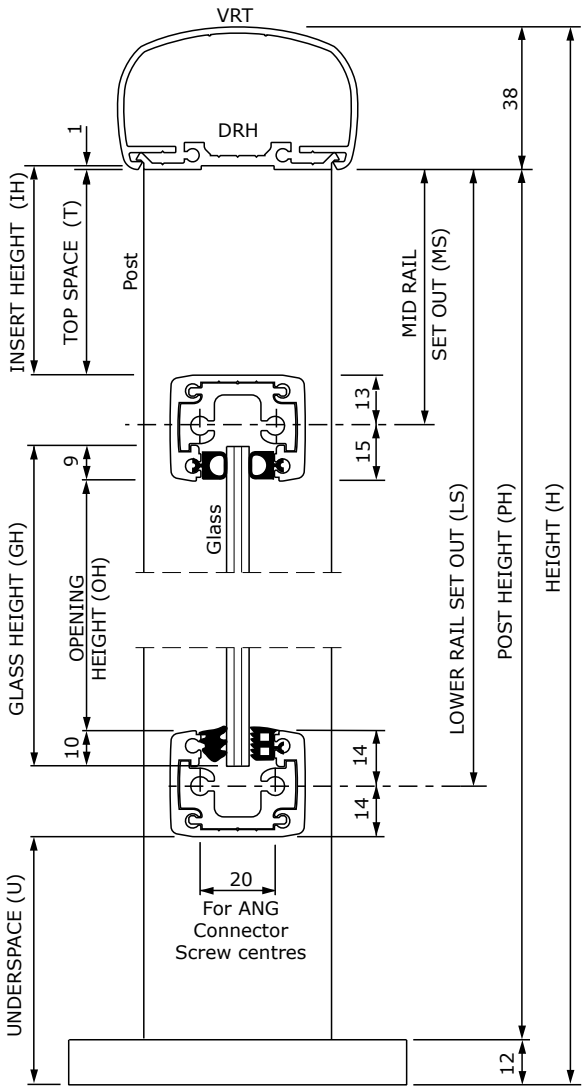

TYPICAL CROSS SECTION

UNEX ARCHITECTURAL BARRIERS
Specifications subject to change without notice
Phone 0800 333 777 | www.unex.co.nz

'SPECTRA' (ART TOP RAIL) - VERTICAL DIMENSIONS

'SPECTRA' (ART TOP RAIL) - VERTICAL DIMENSIONS[1]					
DIMENSION		FORMULA	TYPICAL VALUES (mm)		
HEIGHT	(H)	As specified	1000	1100	1200
TOP SPACE	(T)	As specified	99	99	99
UNDERSPACE	(U)	As specified	88[2]	88[2]	88[2]
POST HEIGHT	(PH)	H-38mm[4]	962[4]	1062[4]	1162[4]
INSERT LENGTH TOP	(ILT)	T-1mm[4]	98[4]	98[4]	98[4]
INSERT LENGTH LOWER	(ILL)	U-18mm	70	70	70
GLASS HEIGHT	(GH)	H-U-T-26mm	787	887	987

1. This table applies only with the use of the parts specified below. Post Heights apply only with 12mm thick baseplates for fixing to deck tops.
2. A nominal 88mm Underspace enables the Post Height to be increased by up to 12mm to suit deck level variations, without affecting Glass Height, or exceeding a 100mm Underspace.
3. Minor dimensions on the drawings have been rounded to the nearest millimetre.
4. IMPORTANT NOTE: Some corner posts need 3mm deducted from these dimensions to allow for a VAPU. See Pages 181-191.

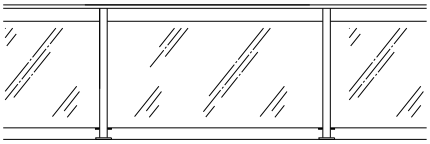

This is a guide for recommended cutting dimensions using the typical extrusions and components illustrated; use of others may require adjustments to the formula and dimensions given here.

REFER TO THE Assembly Specification FOR FURTHER DETAILS

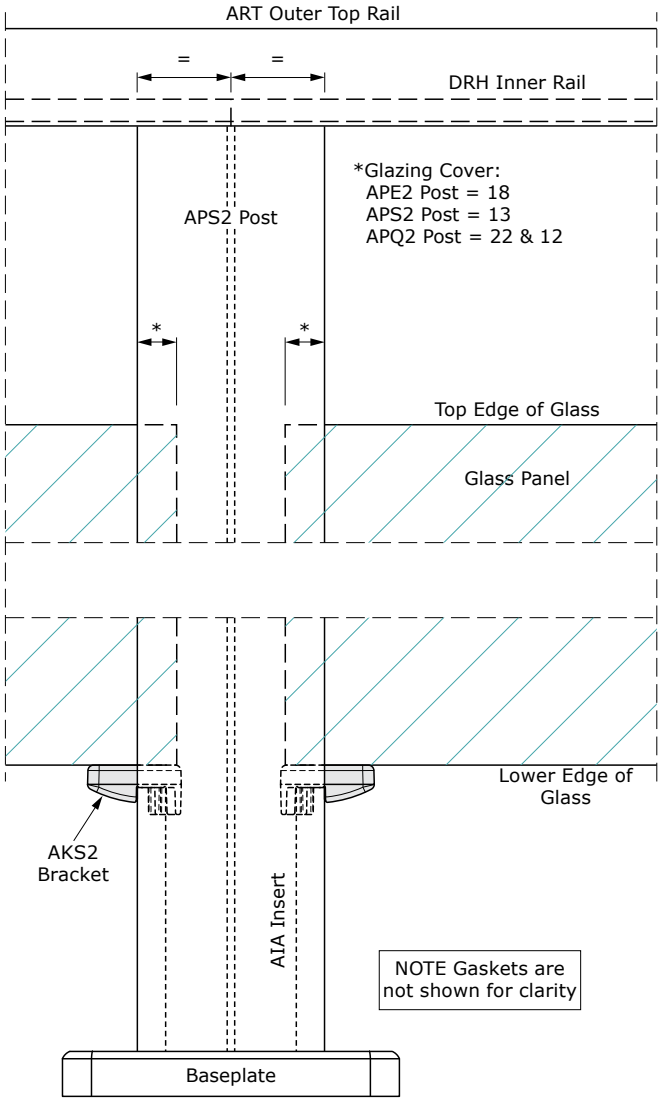

TYPICAL ELEVATION
APS2 Post Illustrated

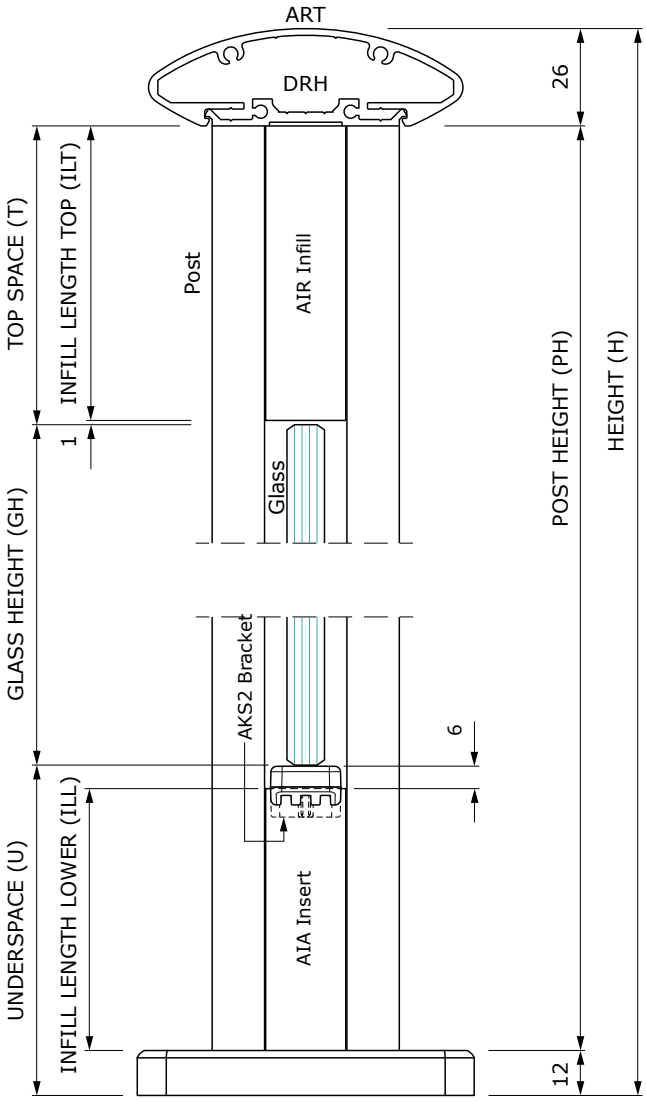

TYPICAL CROSS SECTION

'SPECTRA' (PRR TOP RAIL) - VERTICAL DIMENSIONS

'SPECTRA' (PRR TOP RAIL) - VERTICAL DIMENSIONS[1]					
DIMENSION		FORMULA	TYPICAL VALUES (mm)		
HEIGHT	(H)	As specified	1000	1100	1200
TOP SPACE	(T)	As specified	99	99	99
UNDERSPACE	(U)	As specified	88[2]	88[2]	88[2]
POST HEIGHT	(PH)	H-36mm[4]	964[4]	1064[4]	1164[4]
INSERT LENGTH TOP	(ILT)	T-1mm[4]	98[4]	98[4]	98[4]
INSERT LENGTH LOWER	(ILL)	U-18mm	70	70	70
GLASS HEIGHT	(GH)	H-U-T-24mm	789	889	989

1. This table applies only with the use of the parts specified below. Post Heights apply only with 12mm thick baseplates for fixing to deck tops.
2. A nominal 88mm Underspace enables the Post Height to be increased by up to 12mm to suit deck level variations, without affecting Glass Height, or exceeding a 100mm Underspace.
3. Minor dimensions on the drawings have been rounded to the nearest millimetre.
4. IMPORTANT NOTE: Some corner posts need 3mm deducted from these dimensions to allow for a VAPU. See Pages 181-191.

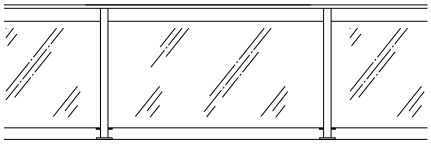

This is a guide for recommended cutting dimensions using the typical extrusions and components illustrated; use of others may require adjustments to the formulae and dimensions given here.

REFER TO THE Assembly Specification FOR FURTHER DETAILS

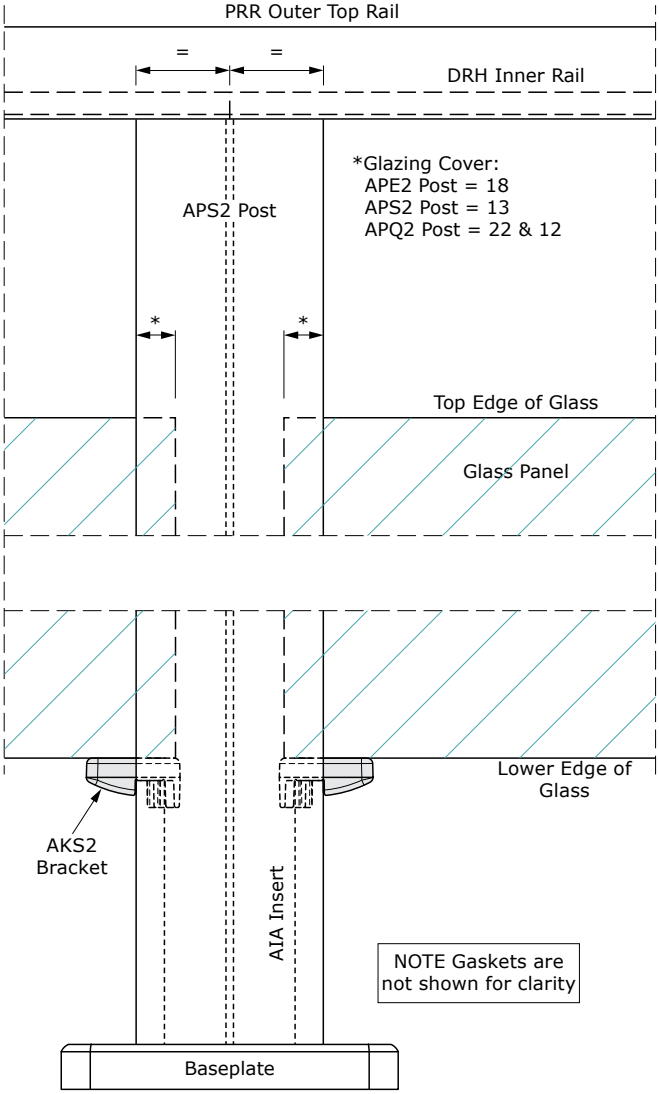

TYPICAL ELEVATION
APS2 Post Illustrated

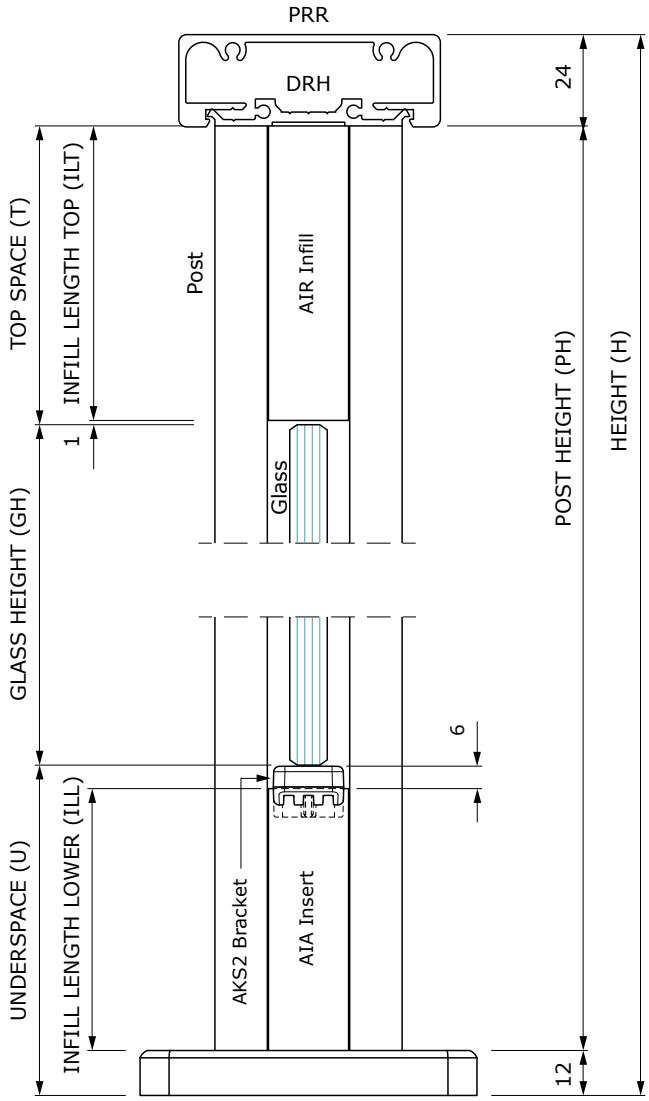

TYPICAL CROSS SECTION

UNEX ARCHITECTURAL BARRIERS
Specifications subject to change without notice
Phone 0800 333 777 | www.unex.co.nz

'SPECTRA' (VRE TOP RAIL) - VERTICAL DIMENSIONS

'SPECTRA' (VRE TOP RAIL) - VERTICAL DIMENSIONS[1]					
DIMENSION		FORMULA	TYPICAL VALUES (mm)		
HEIGHT	(H)	As specified	1000	1100	1200
TOP SPACE	(T)	As specified	99	99	99
UNDERSPACE	(U)	As specified	88[2]	88[2]	88[2]
POST HEIGHT	(PH)	H-38mm[4]	962[4]	1062[4]	1162[4]
INSERT LENGTH TOP	(ILT)	T-1mm[4]	98[4]	98[4]	98[4]
INSERT LENGTH LOWER	(ILL)	U-18mm	70	70	70
GLASS HEIGHT	(GH)	H-U-T-26mm	787	887	987

1. This table applies only with the use of the parts specified below. Post Heights apply only with 12mm thick baseplates for fixing to deck tops.
2. A nominal 88mm Underspace enables the Post Height to be increased by up to 12mm to suit deck level variations, without affecting Glass Height, or exceeding a 100mm Underspace.
3. Minor dimensions on the drawings have been rounded to the nearest millimetre.
4. IMPORTANT NOTE: Some corner posts need 3mm deducted from these dimensions to allow for a VAPU. See Pages 181-191.

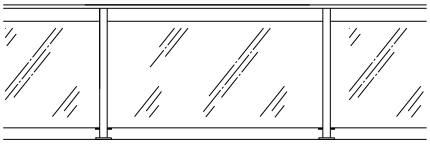

This is a guide for recommended cutting dimensions using the typical extrusions and components illustrated; use of others may require adjustments to the formula and dimensions given here.

REFER TO THE Assembly Specification FOR FURTHER DETAILS

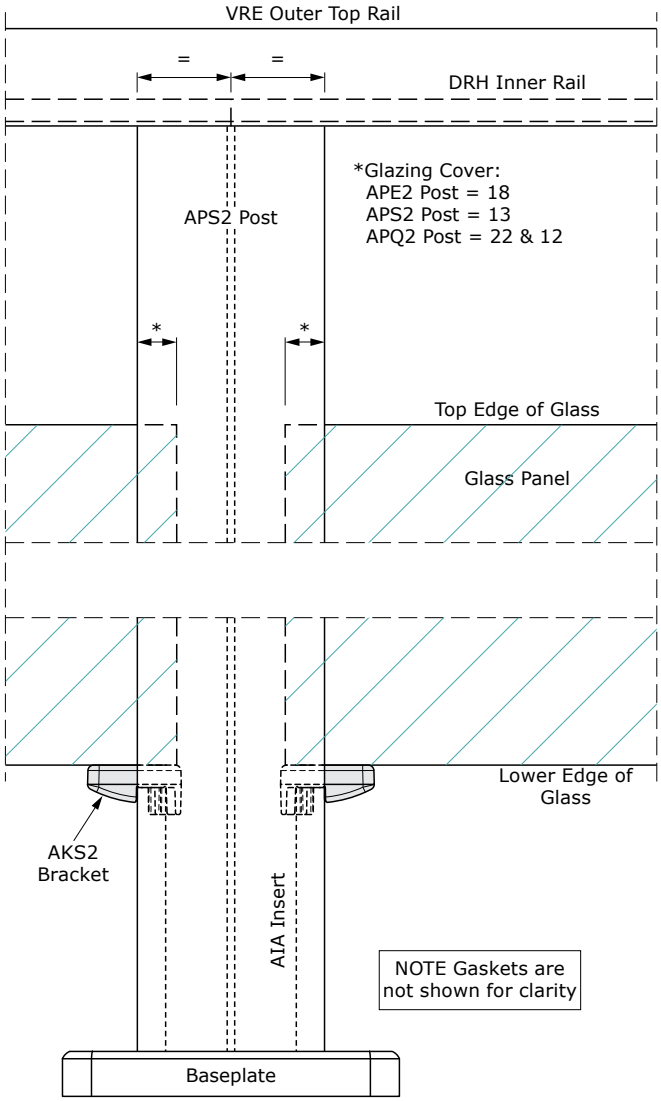

TYPICAL ELEVATION
APS2 Post Illustrated

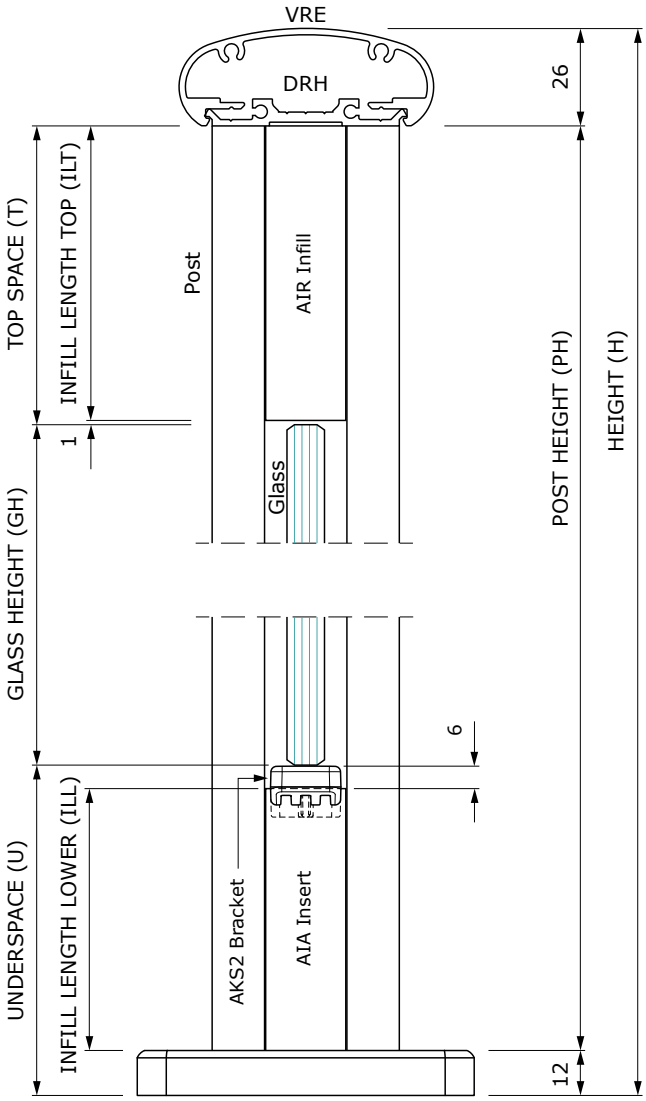

TYPICAL CROSS SECTION

'SPECTRA' (VRR TOP RAIL) - VERTICAL DIMENSIONS

'SPECTRA' (VRR TOP RAIL) - VERTICAL DIMENSIONS[1]					
DIMENSION		FORMULA	TYPICAL VALUES (mm)		
HEIGHT	(H)	As specified	1000	1100	1200
TOP SPACE	(T)	As specified	99	99	99
UNDERSPACE	(U)	As specified	88[2]	88[2]	88[2]
POST HEIGHT	(PH)	H-42mm[4]	958[4]	1058[4]	1158[4]
INSERT LENGTH TOP	(ILT)	T-1mm[4]	98[4]	98[4]	98[4]
INSERT LENGTH LOWER	(ILL)	U-18mm	70	70	70
GLASS HEIGHT	(GH)	H-U-T-30mm	783	883	983

1. This table applies only with the use of the parts specified below. Post Heights apply only with 12mm thick baseplates for fixing to deck tops.
2. A nominal 88mm Underspace enables the Post Height to be increased by up to 12mm to suit deck level variations, without affecting Glass Height, or exceeding a 100mm Underspace.
3. Minor dimensions on the drawings have been rounded to the nearest millimetre.
4. IMPORTANT NOTE: Some corner posts need 3mm deducted from these dimensions to allow for a VAPU. See Pages 181-191.

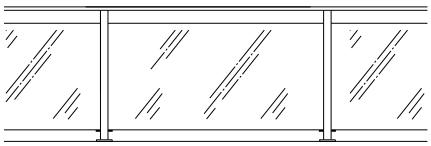

This is a guide for recommended cutting dimensions using the typical extrusions and components illustrated; use of others may require adjustments to the formulae and dimensions given here.

REFER TO THE Assembly Specification FOR FURTHER DETAILS

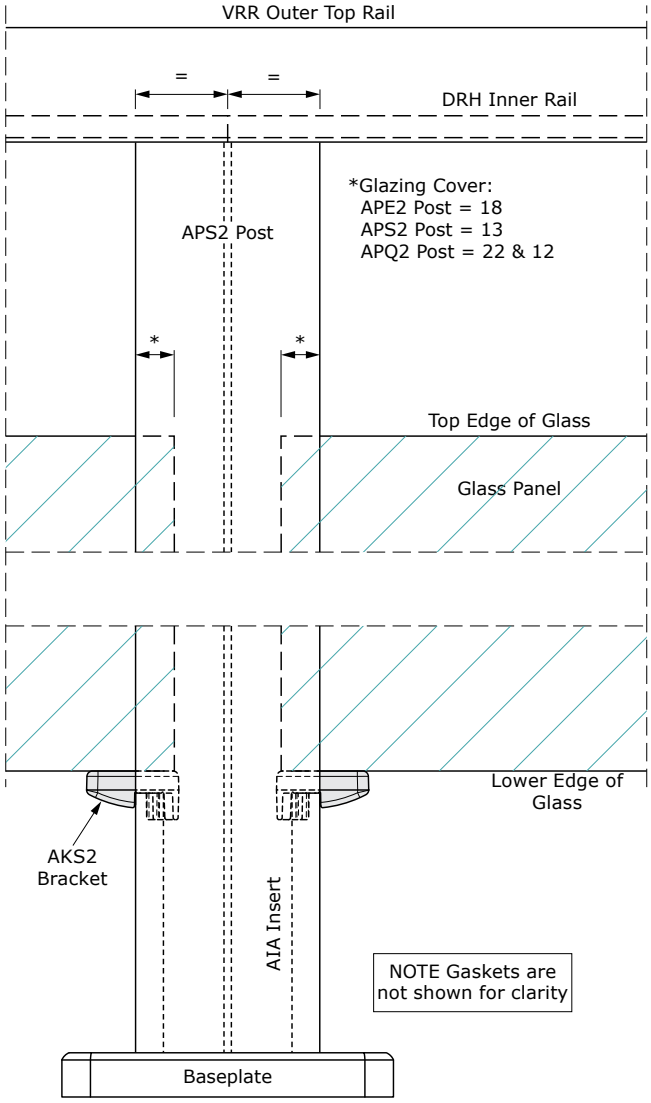

TYPICAL ELEVATION
APS2 Post Illustrated

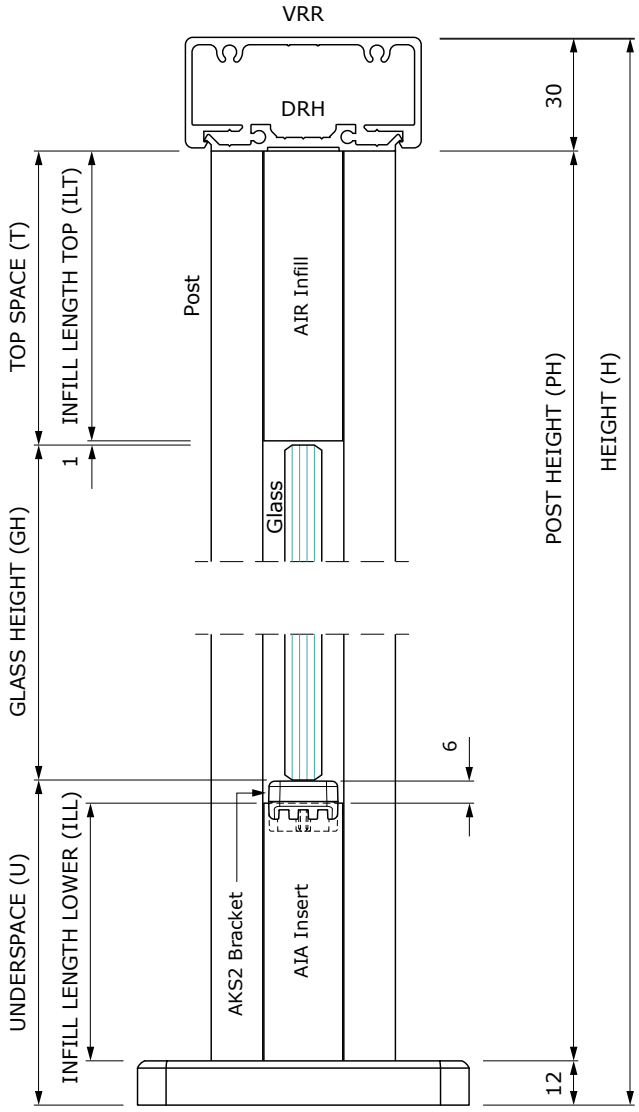

TYPICAL CROSS SECTION

UNEX ARCHITECTURAL BARRIERS
Specifications subject to change without notice
Phone 0800 333 777 | www.unex.co.nz

'SPECTRA' (VRT TOP RAIL) - VERTICAL DIMENSIONS

'SPECTRA' (VRT TOP RAIL) - VERTICAL DIMENSIONS[1]					
DIMENSION		FORMULA	TYPICAL VALUES (mm)		
HEIGHT	(H)	As specified	1000	1100	1200
TOP SPACE	(T)	As specified	99	99	99
UNDERSPACE	(U)	As specified	88[2]	88[2]	88[2]
POST HEIGHT	(PH)	H-50mm[4]	950[4]	1050[4]	1150[4]
INSERT LENGTH TOP	(ILT)	T-1mm[4]	98[4]	98[4]	98[4]
INSERT LENGTH LOWER	(ILL)	U-18mm	70	70	70
GLASS HEIGHT	(GH)	H-U-T-38mm	775	875	975

1. This table applies only with the use of the parts specified below. Post Heights apply only with 12mm thick baseplates for fixing to deck tops.
2. A nominal 88mm Underspace enables the Post Height to be increased by up to 12mm to suit deck level variations, without affecting Glass Height, or exceeding a 100mm Underspace.
3. Minor dimensions on the drawings have been rounded to the nearest millimetre.
4. IMPORTANT NOTE: Some corner posts need 3mm deducted from these dimensions to allow for a VAPU. See Pages 181-191.

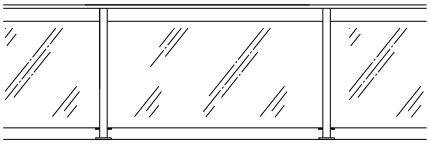

This is a guide for recommended cutting dimensions using the typical extrusions and components illustrated; use of others may require adjustments to the formula and dimensions given here.

REFER TO THE Assembly Specification FOR FURTHER DETAILS

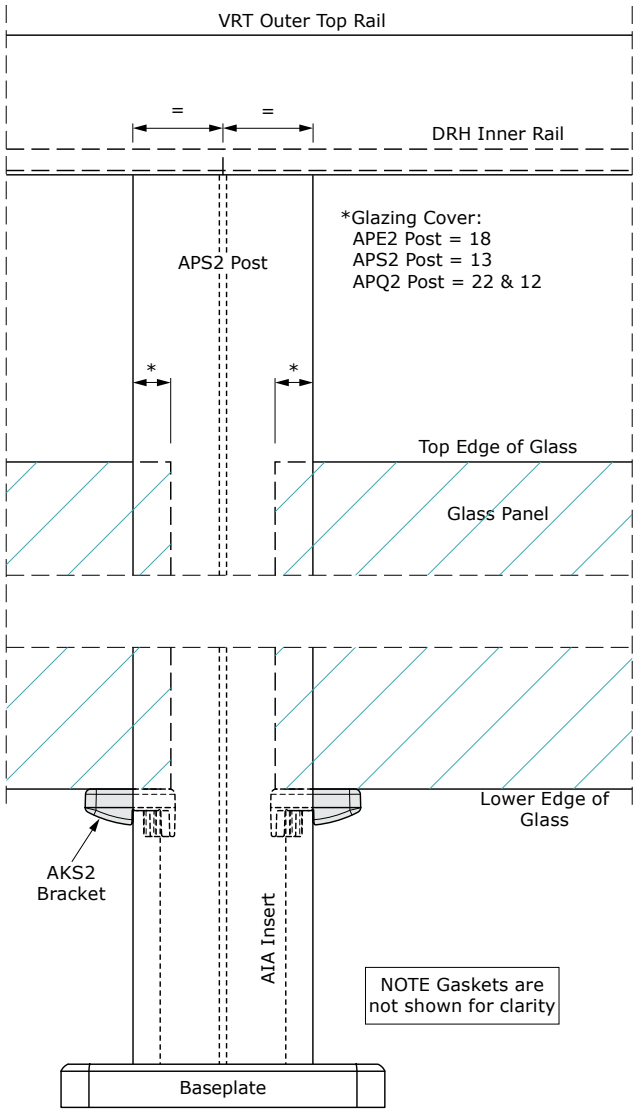

TYPICAL ELEVATION
APS2 Post Illustrated

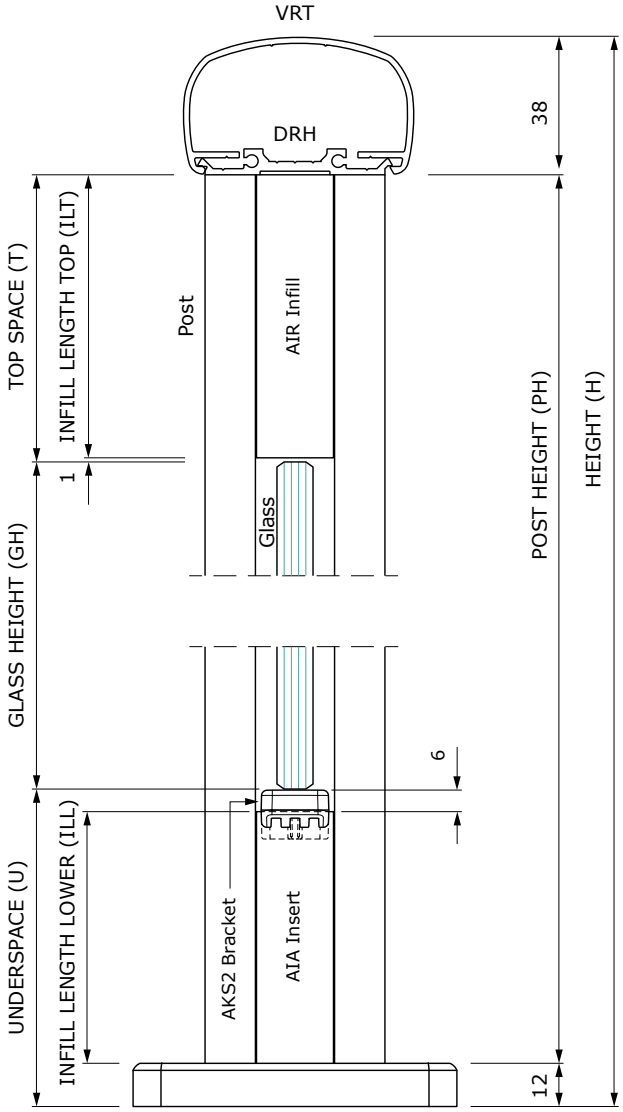

TYPICAL CROSS SECTION

'SIENA' (ART TOP RAIL) - VERTICAL DIMENSIONS

'SIENA' (ART TOP RAIL) - VERTICAL DIMENSIONS[1]					
DIMENSION		FORMULA	TYPICAL VALUES (mm)		
HEIGHT	(H)	As specified	1000	1100	1200
UNDERSPACE	(U)	As specified	88[2]	88[2]	88[2]
POST HEIGHT	(PH)	H-38mm[4]	962[4]	1062[4]	1162[4]
INSERT LENGTH LOWER	(ILL)	U-18mm	70	70	70
GLASS HEIGHT	(GH)	H-U-26+12mm	898	998	1098

1. This table applies only with the use of the parts specified below. Post Heights apply only with 12mm thick baseplates for fixing to deck tops.
2. A nominal 88mm Underspace enables the Post Height to be increased by up to 12mm to suit deck level variations, without affecting Glass Height, or exceeding a 100mm Underspace.
3. Minor dimensions on the drawings have been rounded to the nearest millimetre.
4. IMPORTANT NOTE: Some corner posts need 3mm deducted from these dimensions to allow for a VAPU. See Pages 181-191.

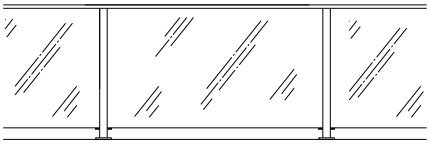

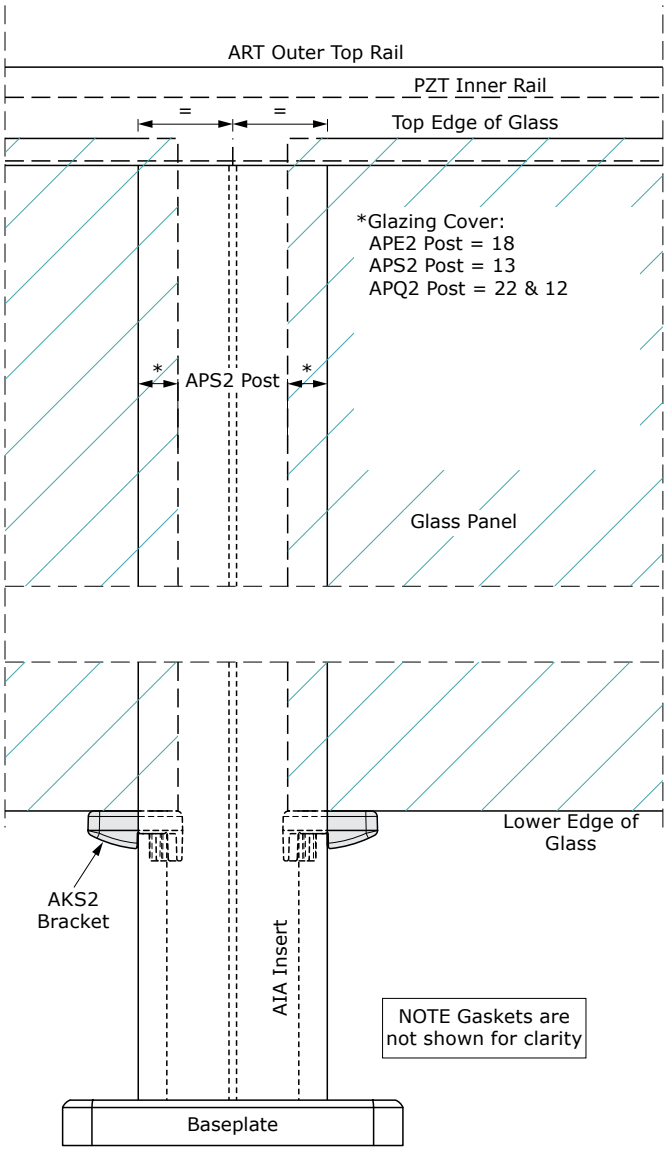

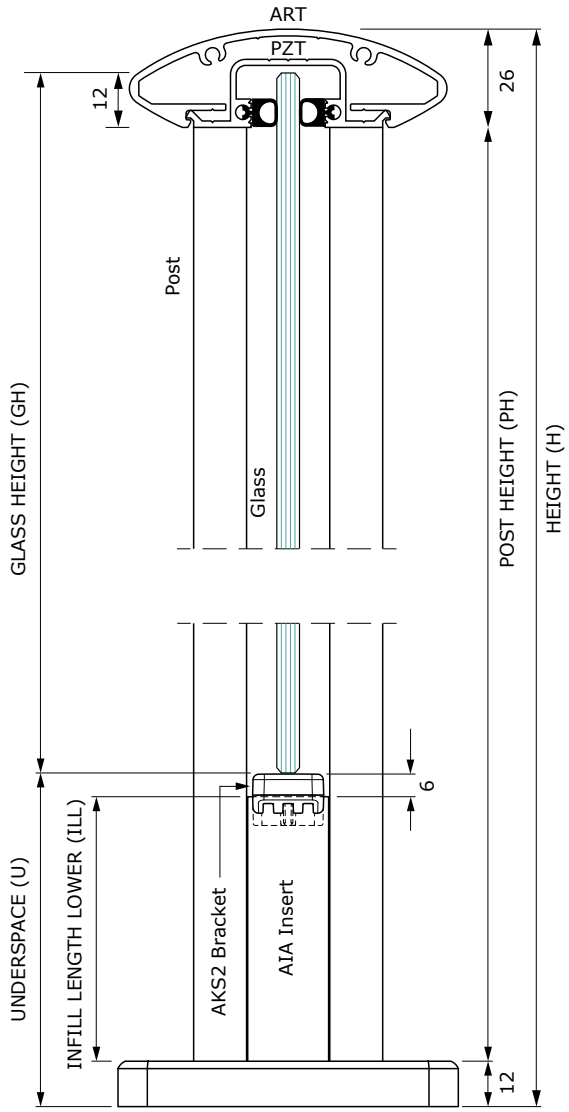

UNEX ARCHITECTURAL BARRIERS
Specifications subject to change without notice
Phone 0800 333 777 | www.unex.co.nz

'SIENA' (PRR TOP RAIL) - VERTICAL DIMENSIONS

'SIENA' (PRR TOP RAIL) - VERTICAL DIMENSIONS[1]				
DIMENSION	FORMULA	TYPICAL VALUES (mm)		
HEIGHT (H)	As specified	1000	1100	1200
UNDERSPACE (U)	As specified	88[2]	88[2]	88[2]
POST HEIGHT (PH)	H-36mm[4]	964[4]	1064[4]	1164[4]
INSERT LENGTH LOWER (ILL)	U-18mm	70	70	70
GLASS HEIGHT (GH)	H-U-24+12mm	900	1000	1100

1. This table applies only with the use of the parts specified below. Post Heights apply only with 12mm thick baseplates for fixing to deck tops.
2. A nominal 88mm Underspace enables the Post Height to be increased by up to 12mm to suit deck level variations, without affecting Glass Height, or exceeding a 100mm Underspace.
3. Minor dimensions on the drawings have been rounded to the nearest millimetre.
4. IMPORTANT NOTE: Some corner posts need 3mm deducted from these dimensions to allow for a VAPU. See Pages 181-191.

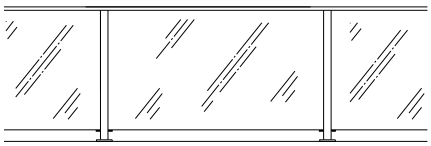

This is a guide for recommended cutting dimensions using the typical extrusions and components illustrated; use of others may require adjustments to the formula and dimensions given here.

REFER TO THE Assembly Specification FOR FURTHER DETAILS

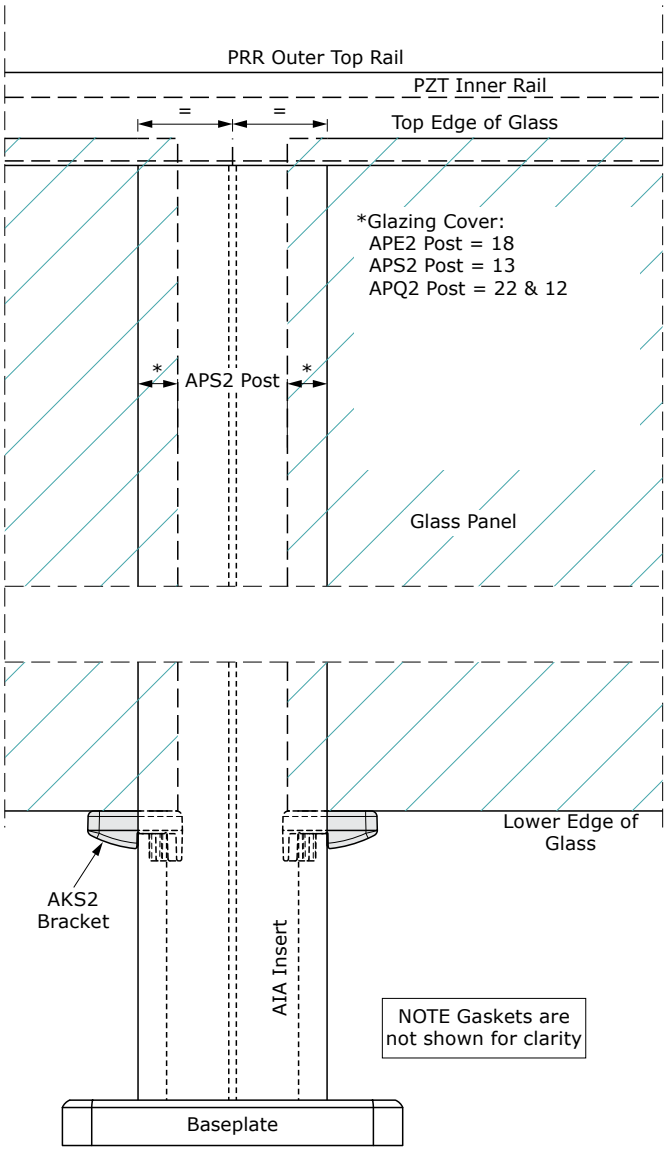

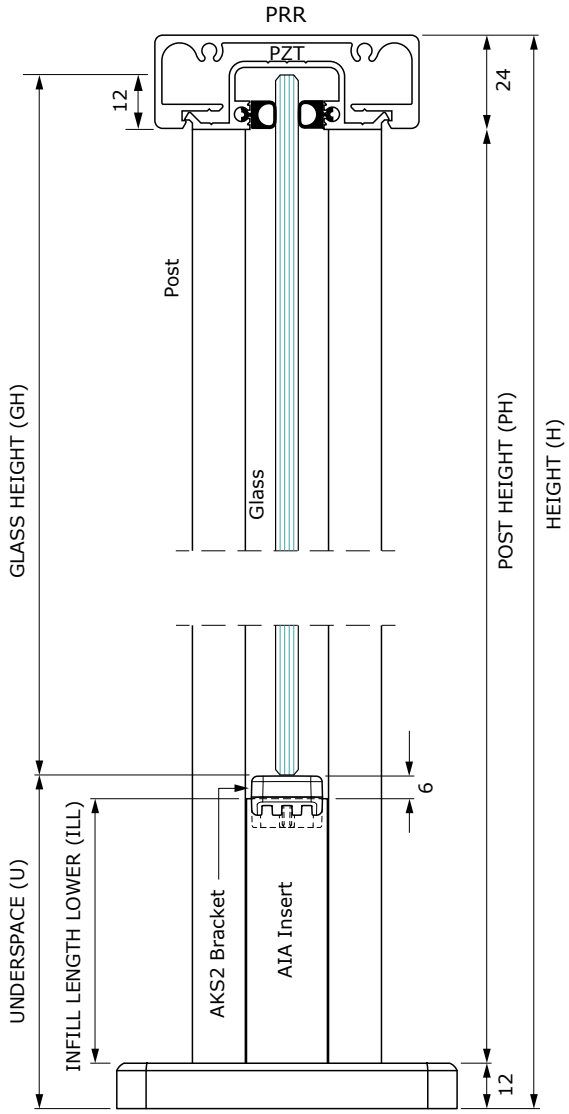

'SIENA' (VRE TOP RAIL) - VERTICAL DIMENSIONS

'SIENA' (VRE TOP RAIL) - VERTICAL DIMENSIONS[1]				
DIMENSION	FORMULA	TYPICAL VALUES (mm)		
HEIGHT (H)	As specified	1000	1100	1200
UNDERSPACE (U)	As specified	88[2]	88[2]	88[2]
POST HEIGHT (PH)	H-38mm[4]	962[4]	1062[4]	1162[4]
INSERT LENGTH LOWER (ILL)	U-18mm	70	70	70
GLASS HEIGHT (GH)	H-U-26+12mm	898	998	1098

1. This table applies only with the use of the parts specified below. Post Heights apply only with 12mm thick baseplates for fixing to deck tops.
2. A nominal 88mm Underspace enables the Post Height to be increased by up to 12mm to suit deck level variations, without affecting Glass Height, or exceeding a 100mm Underspace.
3. Minor dimensions on the drawings have been rounded to the nearest millimetre.
4. IMPORTANT NOTE: Some corner posts need 3mm deducted from these dimensions to allow for a VAPU. See Pages 181-191.

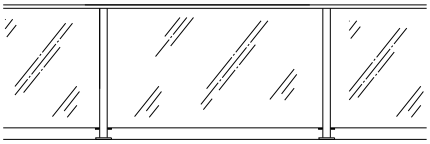

This is a guide for recommended cutting dimensions using the typical extrusions and components illustrated; use of others may require adjustments to the formulae and dimensions given here.

REFER TO THE Assembly Specification FOR FURTHER DETAILS

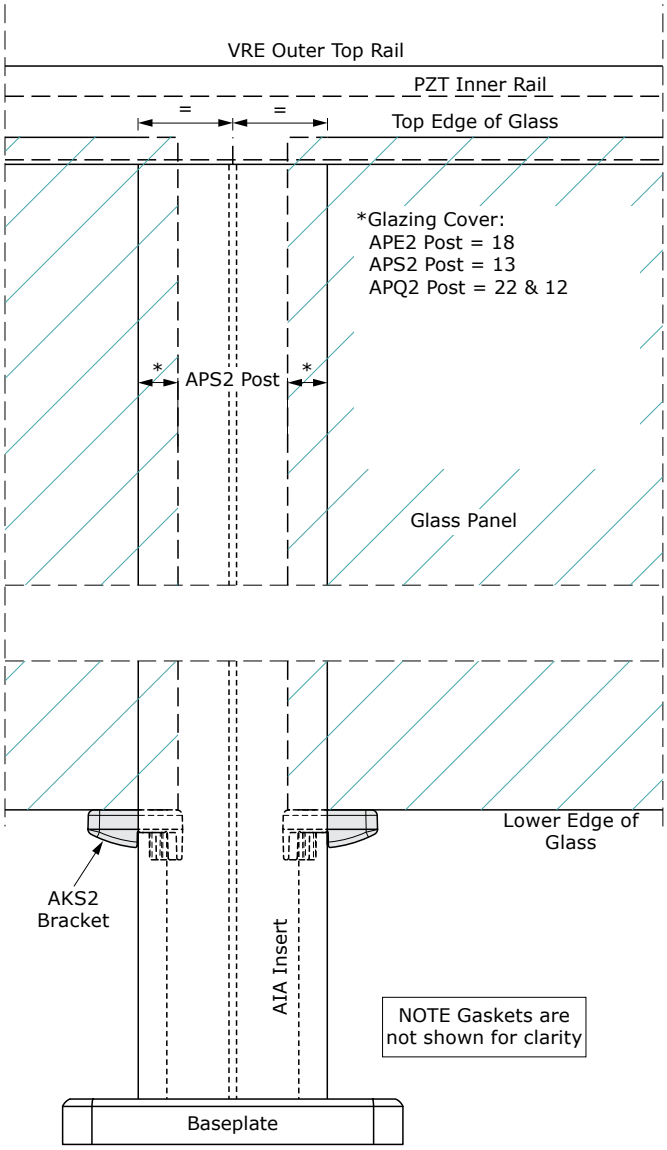

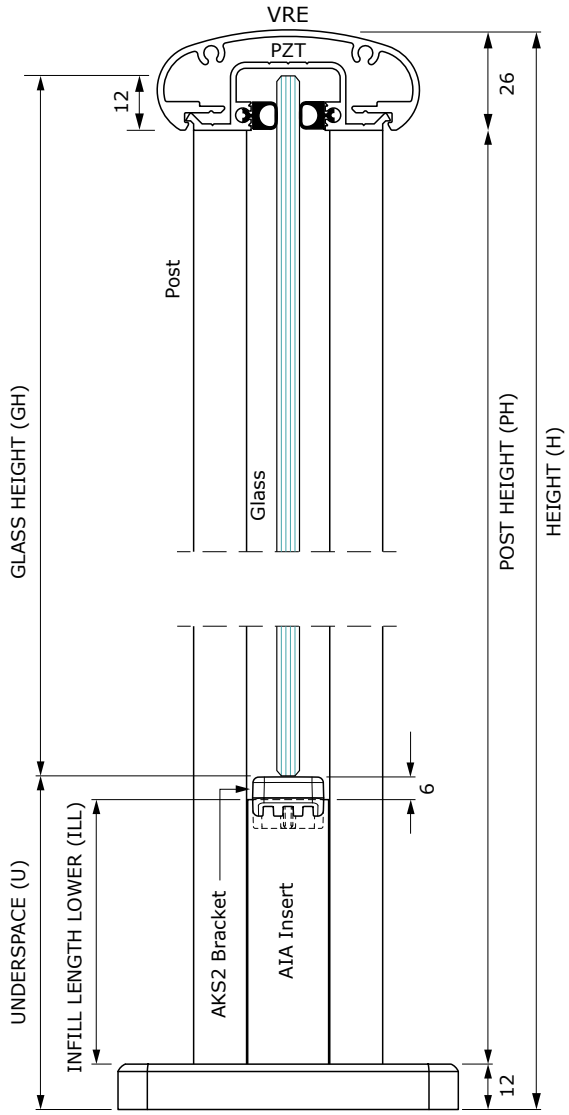

UNEX ARCHITECTURAL BARRIERS
Specifications subject to change without notice
Phone 0800 333 777 | www.unex.co.nz

'SIENA' (VRR TOP RAIL) - VERTICAL DIMENSIONS

'SIENA' (VRR TOP RAIL) - VERTICAL DIMENSIONS[1]					
DIMENSION		FORMULA	TYPICAL VALUES (mm)		
HEIGHT	(H)	As specified	1000	1100	1200
UNDERSPACE	(U)	As specified	88[2]	88[2]	88[2]
POST HEIGHT	(PH)	H-42mm[4]	958[4]	1058[4]	1158[4]
INSERT LENGTH LOWER	(ILL)	U-18mm	70	70	70
GLASS HEIGHT	(GH)	H-U-30+12mm	894	994	1094

1. This table applies only with the use of the parts specified below. Post Heights apply only with 12mm thick baseplates for fixing to deck tops.
2. A nominal 88mm Underspace enables the Post Height to be increased by up to 12mm to suit deck level variations, without affecting Glass Height, or exceeding a 100mm Underspace.
3. Minor dimensions on the drawings have been rounded to the nearest millimetre.
4. IMPORTANT NOTE: Some corner posts need 3mm deducted from these dimensions to allow for a VAPU. See Pages 181-191.

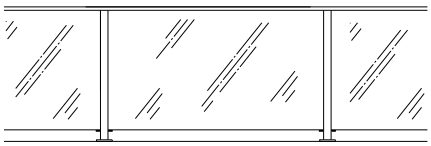

This is a guide for recommended cutting dimensions using the typical extrusions and components illustrated; use of others may require adjustments to the formula and dimensions given here.

REFER TO THE Assembly Specification FOR FURTHER DETAILS

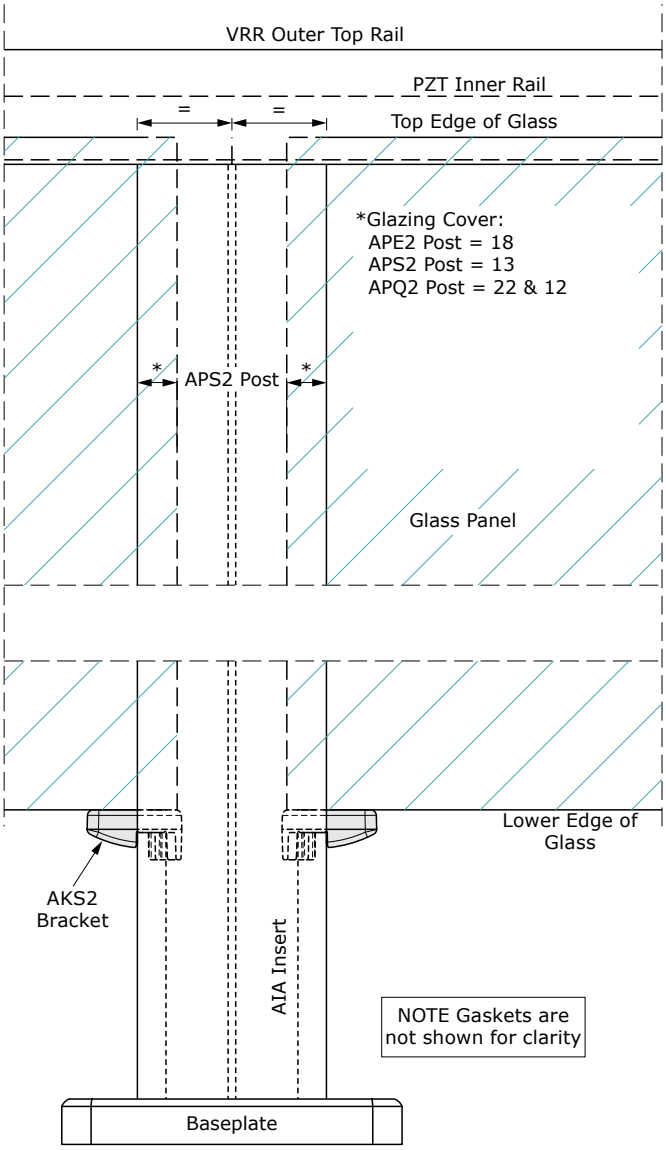

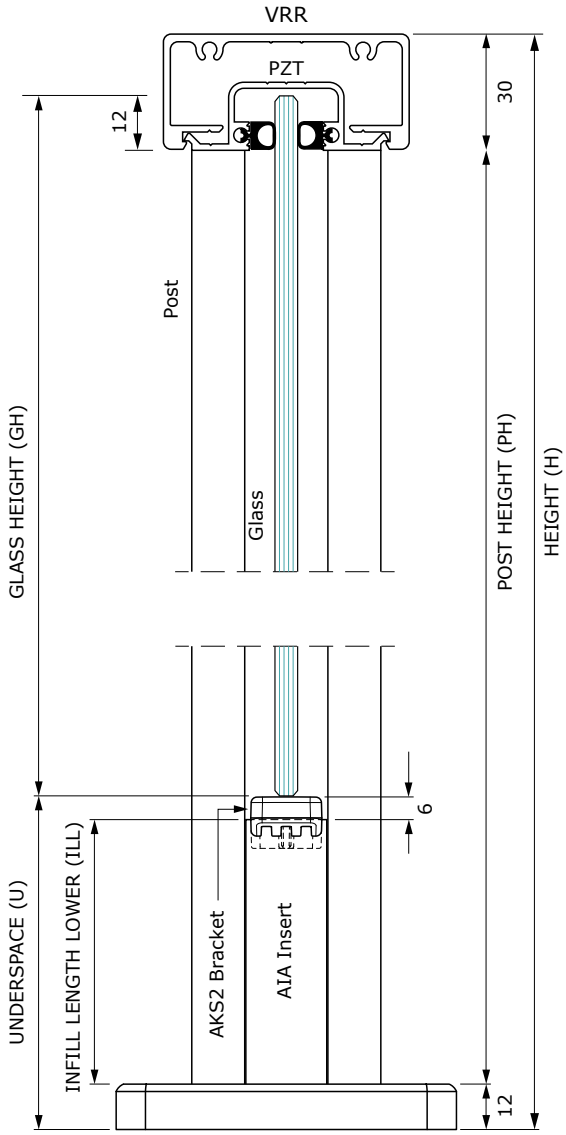

'SIENA' (VRT TOP RAIL) - VERTICAL DIMENSIONS

'SIENA' (VRT TOP RAIL) - VERTICAL DIMENSIONS[1]					
DIMENSION		FORMULA	TYPICAL VALUES (mm)		
HEIGHT	(H)	As specified	1000	1100	1200
UNDERSPACE	(U)	As specified	88[2]	88[2]	88[2]
POST HEIGHT	(PH)	H-50mm[4]	950[4]	1050[4]	1150[4]
INSERT LENGTH LOWER	(ILL)	U-18mm	70	70	70
GLASS HEIGHT	(GH)	H-U-38+20mm	894	994	1094

1. This table applies only with the use of the parts specified below. Post Heights apply only with 12mm thick baseplates for fixing to deck tops.
2. A nominal 88mm Underspace enables the Post Height to be increased by up to 12mm to suit deck level variations, without affecting Glass Height, or exceeding a 100mm Underspace.
3. Minor dimensions on the drawings have been rounded to the nearest millimetre.
4. IMPORTANT NOTE: Some corner posts need 3mm deducted from these dimensions to allow for a VAPU. See Pages 181-191.

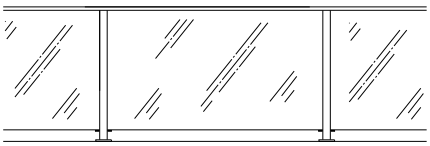

This is a guide for recommended cutting dimensions using the typical extrusions and components illustrated; use of others may require adjustments to the formulae and dimensions given here.

REFER TO THE Assembly Specification FOR FURTHER DETAILS

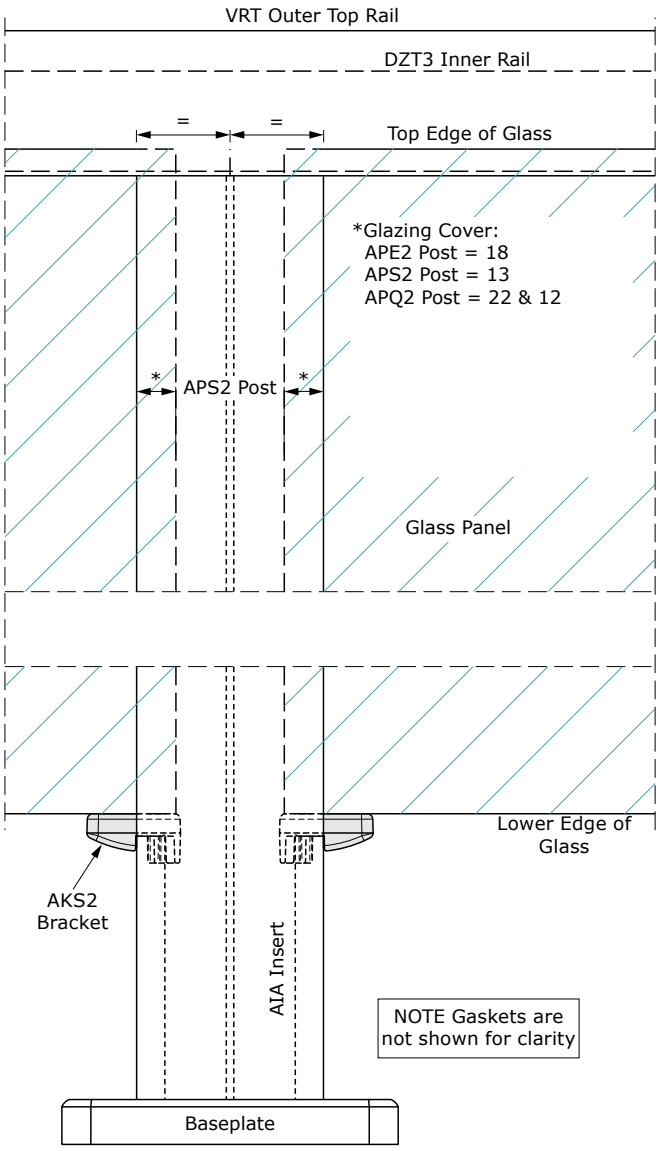

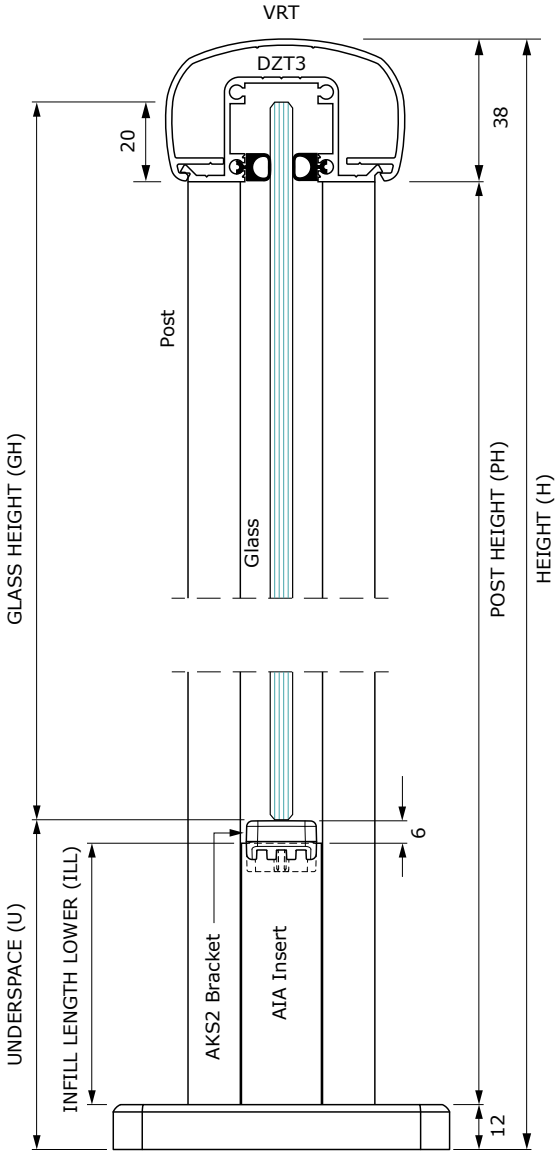

UNEX ARCHITECTURAL BARRIERS
Specifications subject to change without notice
Phone 0800 333 777 | www.unex.co.nz

DURABILITY

The New Zealand Building Code requires all balustrading to be sufficiently durable so as to remain functional for certain specified periods of time. These periods are given in the Acceptable Solution B2/AS1, which indicates a 'serviceable' durability requirement of 50 years for balustrade posts and top rails, and 15 years for infill members.

Whilst specific details to achieve these requirements for the common situations are given throughout this manual, it is essential that they are applied to all exterior balustrade installations regardless. These issues may be placed under two general areas as follows;

1. DRAINAGE

Water entrapped in members can potentially be detrimental to the durability of a balustrade, and provision for moisture to drain must therefore be made. Common areas where such provision is necessary, and how it can be achieved is as follows;

1.1. TOP FIXED HOLLOW POSTS
Mill two drainage slots 5mm x 5mm at base-plate level, one on each side of the post 10mm off the post centreline. Alternatively, provide two Ø5mm drainage holes in these positions, centred 3mm above the bottom of the post.

1.2. FACE FIXED POSTS
Drill a central Ø6mm drainage hole in the bottom post blank of each post. Standard base blanks from UNEX will generally have these holes already drilled. With the APE2, API2, APQ2, APS2 and APT posts, also leave the AIR infill clip clear of the post blank by 3mm on both sides, to ensure all parts of the post are drained.

1.3. GLAZED LOWER RAILS
Drill a Ø5.5mm hole mid span on glazed lower rails that are horizontal, or at the lower end of lower rails that are sloping.

1.4. INNER TOP RAILS
To minimise entrance of moisture into posts, any Inner Top Rails (e.g. DRH, PZT etc) should be continuous over the posts wherever possible. Where joints are required, these shall be centred on a post with a minimum gap between rails.

2. SEPARATION OF MATERIALS

Dissimilar materials can react with each other in varying degrees if in contact with each other. This can potentially reduce the durability of a balustrade and measures must be taken to minimise this occurring. This means that aluminium members must be separated from other materials, including stainless steel fixings, as outlined below;

2.1. TOP FIXED POSTS
A polymer washer shall be inserted between the top of the base-plate and the underside of all stainless steel washers used for substrate fasteners. UNEX Product codes are FWP8-22G and FWP10-22G for M8 and M10 respectively. Note for FC8-165 coach screws, the standard washers supplied with rubber seals will be adequate.

2.2. SIDE FIXED POSTS
(a) A polymer washer shall be placed between the stainless steel washer adjacent to the head of the fixing screw and the side of the post. UNEX product codes are FWP8-22G and FWP10-22G for M8 and M10 respectively.

(b) A strip of neoprene gasket shall be placed between the side of the post and the adjacent substrate. This may also assist with waterproofing issues if required. These are available from UNEX in four widths of 24mm, 36mm, 42mm and 50mm in 1.2 metre lengths. UNEX product code example SG42-12 is 42mm wide (for 50mm post) and 1.2 metres long.
- For DKF brackets use SG24-12
- For VPM2 posts use SG36-12
- For 50mm wide posts use SG42-12
- For 60mm wide posts use SG50-12

Cut strips to the length required to obtain contact over the full depth of bearing surface.

DURABILITY (CONT.)

(c) Where the stainless steel fixings pass through the post, the fixing shall be wrapped with approx three turns of Teflon tape where it would otherwise be in contact with the aluminium post. UNEX product code is TTAM.

(d) For DKF brackets, use FJ6-60S Jointer bolt sets. These sets have been assembled with the items required for separation of materials.

2.3. STAINLESS STEEL ASSEMBLY SCREWS
The following stainless steel assembly fasteners must be specially treated to minimise any reaction with the aluminium members. This process is carried out by UNEX, and these screws must therefore be purchased from them.

- All screws connecting posts to the post base-plates, or post blanks.
- All lower rail or mid rail spigot screws connecting the spigot to the post.
- All screws connecting the inner top rails or inner top glazing rails to the top of the posts.

2.4. GRADES OF STAINLESS STEEL
All stainless steel fixings and substrate fasteners must be grade 316 stainless steel for maximum durability.

2.5. OTHER
For situations not covered above; EPDM or Neoprene may be a useful product to provide separation between dissimilar materials, and Lanolin grease (available from UNEX – code TGL-05L) can be a useful product to place around areas of contact between aluminium and stainless steel fasteners.

VRL3 LOWER RAIL : CONNECTION TO POSTS

APPLICATION

ANG CONNECTORS enable VRL3 LOWER RAIL extrusion to be attached to certain hollow extruded POST types, without the need for split posts. A N.Z. Patent (No. 299123) has been granted for this method.

NON-PERPENDICULAR JOINTS

Customized ANG type connectors may be cut from MANG extrusion, or made by trimming one end of ANGA. The end under the screw heads should remain square cut, the other end cut at required angle (up to 40°), refer to page 178. Ensure securing screws have full thead engagement.

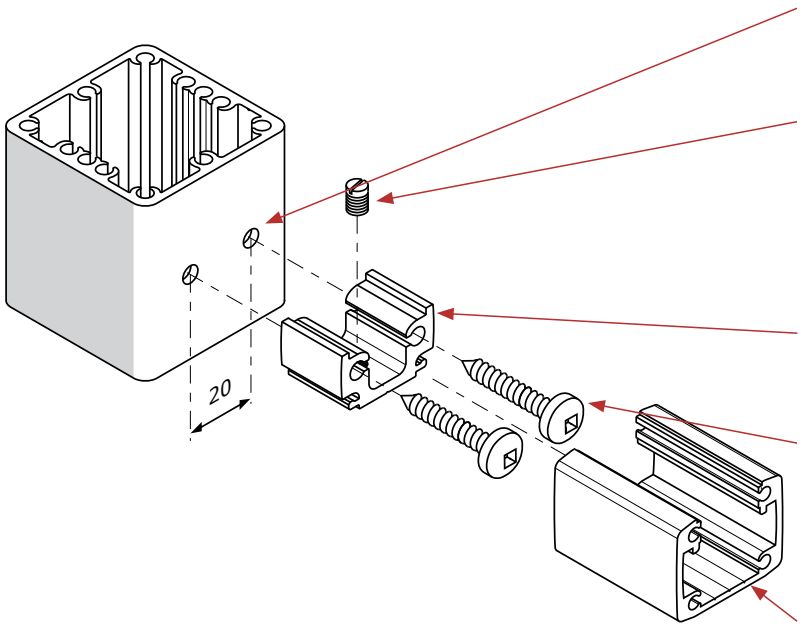

GENERAL METHOD

Ø4.1mm MAXIMUM holes, 2 off. IMPORTANT: Drill Precisely, Using a drill guide.

FASTENER (supplied with some Connector variants). Once rail is tight against postface, lightly tighten the screw to secure. The screw is to assist in installation and prevent rattle only. Do NOT over tighten!

ANG CONNECTOR type (For some styles, both the rail and the ANG will be inverted from that shown here).

2 off FT10-32.T1 Screws. Always ensure full thread engagement. Refer to page 178 for angled ANG connectors. Once screws have been inserted, do not remove.

VRL3 LOWER RAIL, Slides onto the Connector. IMPORTANT: For glazed lower rails, keep the setting blocks within 30mm from the rail ends.

LOWER RAIL CONNECTORS FOR SPECIAL ANGLES

Scope: This page gives cutting instructions for manufacturing ANG type Lower Rail connectors for non-perpendicular jointing of VRL3 Lower Rail to posts. It is important for glazed rails that connectors are cut to the correct length as well as the correct angle, as both over-length and under-length connectors may not achieve maximum structural performance. Special connectors may be cut from MANG extrusion, or from ANGA which come with a fastener fitted and are designed to be trimmed to the desired configuration. 40º is the recommended maximum cutting angle. The fastener is optional for baluster panels, but may be useful for anti-rattle purposes.

1. HORIZONTAL ANGLES

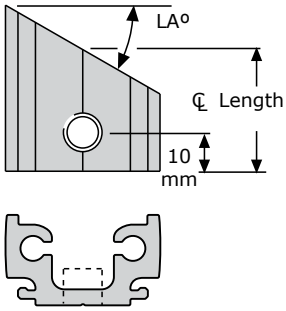

These connectors are used for corners where rails abut the post at an angle within a horizontal plane. Length is mostly conveniently measured along the centreline. Refer to Table 1.

TABLE 1			
ANGLE LAº	℄ LENGTH mm	SCREW SIZE	
		LONG SIDE	SHORT SIDE
UP TO 20º	20	FT10-38.T1	FT10-32.T1
25º	22	FT10-50.T1	
30º	24		
35º	25		
40º	27		

2. 'UPHILL' VERTICAL ANGLES

These connectors are used for sloping rails on the 'Uphill' side of a post. Length is most conveniently measured on the groove on the Screwpipe centreline length. Refer to Table 2.

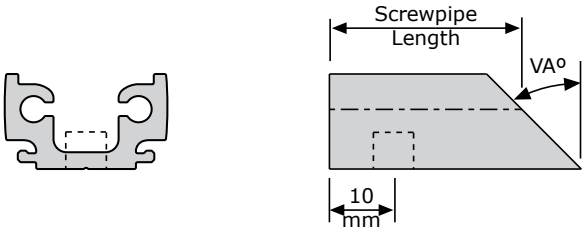

TABLE 2		
ANGLE VAº	SCREWPIPE LENGTH mm	SCREW SIZE
UP TO 20º	20	FT10-32.T1
25º	23	FT10-38.T1
30º	25	
35º	28	FT10-50.T1
40º	30	

3. 'DOWNHILL' VERTICAL ANGLES

These connectors are used for sloping rails on the 'Downhill' side of a post. Length is most conveniently measured on the groove on the Screwpipe centreline length. Refer to Table 3.

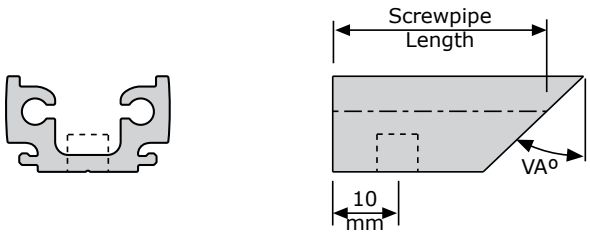

TABLE 3		
ANGLE VAº	SCREWPIPE LENGTH mm	SCREW SIZE
0º	20	FT10-32.T1
5º	21	
10º	22	
15º	23	FT10-38.T1
20º	24	
25º	25	
30º	26	
35º	28	FT10-50.T1
40º	29	
45º	31	

AKS2 ATTACHMENT TO RECESSED POSTS : TOP MOUNTED SITUATION

This page relates to attaching AKS2 plates via AIA inserts to any recessed post (e.g. APQ2, ...etc), for use only in situations where the post is top mounted via a base plate.

The AKS2 plate is typically used in the 'VETRO', 'SURREAL', 'SPECTRA', and 'SIENA' styles, for the purpose of supporting the vertical weight of the glass infill.

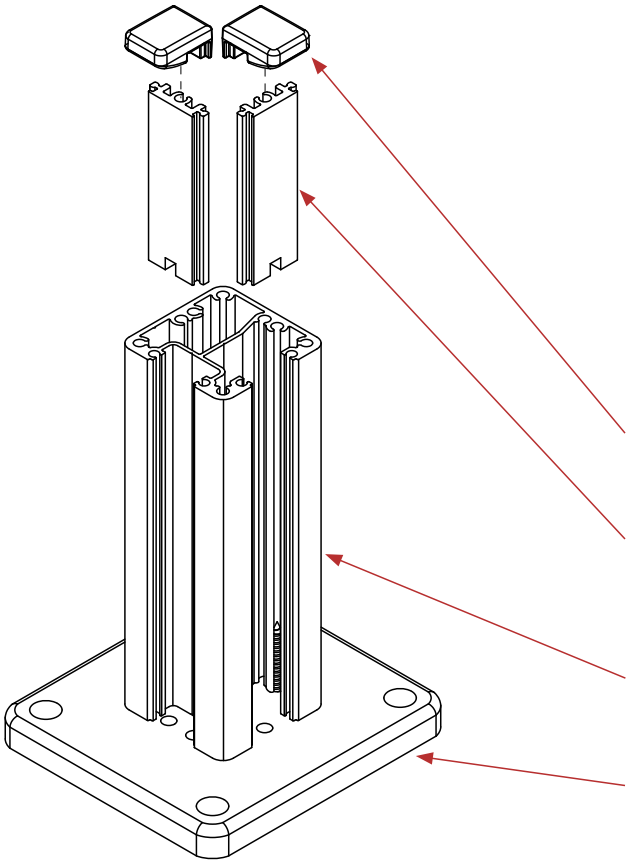

AKS2 Plate. Push fit.

AIA Insert. Slides into post recess and sits on base plate with AKS attached to top.

Balustrade Post. APQ2 illustrated.

Baseplate. BSRF illustrated.

CROSS SECTION

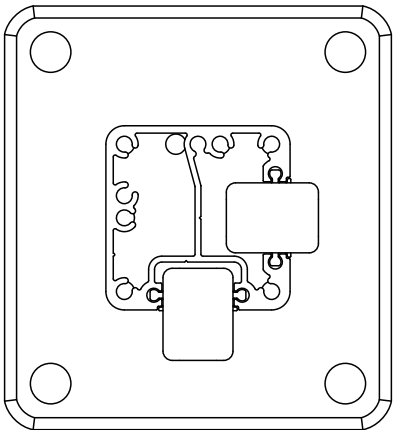

AKS2 ATTACHMENT TO RECESSED POSTS : SIDE MOUNTED SITUATION

This page relates to attaching AKS2 plates via AIA inserts to APE2, APQ2 or APS2 recessed posts, for use only in situations where the post is side mounted to the substrate.

The AKS2 plate is typically used in the 'VETRO', 'SURREAL', 'SPECTRA', and 'SIENA' styles, for the purpose of supporting the vertical weight of the glass infill.

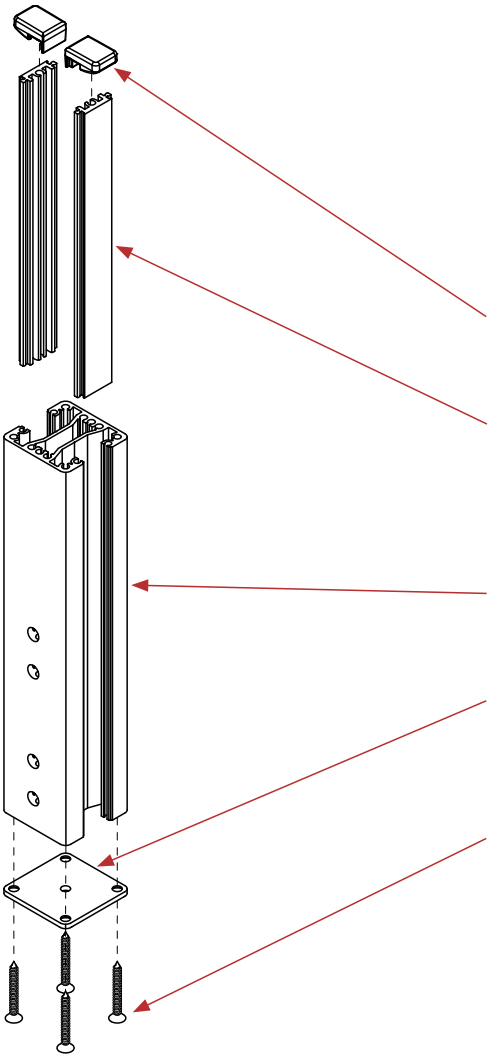

AKS2 Plate. Push fit.

AIA Insert. Slides into post recess and sits on post blank with AKS2 attached to top.

Balustrade Post. APS2 illustrated.

AAPS2 Post Blank. Important Note: Must be attached with 4 screws as illustrated.

FVHT10-50.T1 Screws. Always ensure full thread engagement. Do not remove the screws once they have been inserted.

CROSS SECTION

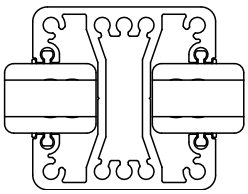

AKSV ATTACHMENT TO RECESSED POSTS : STAIR TOP MOUNTED SITUATION

This page relates to attaching AKSV plates via AIA inserts to any recessed post (e.g. APQ2, ...etc), for use only in situations where the post is top mounted to stair treads via a base plate, with vertically sloping glass panes (40° maximum stair slope).

The AKSV plate is typically used in the 'VETRO', 'SURREAL', 'SPECTRA', and 'SIENA' styles, for the purpose of supporting the vertical weight of the glass infill. An SBC should be positioned centrally on top of the plate to provide a setting block for the glass infill.

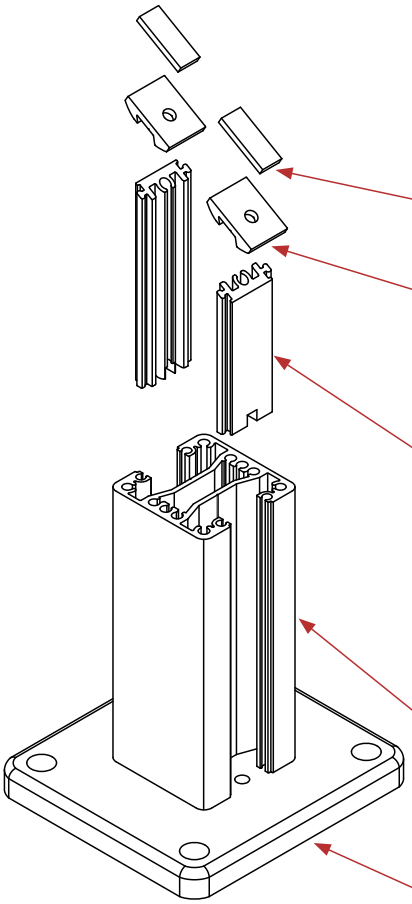

SBC Setting Blocks.

AKSV Plate with grove on underside for attaching to AIA insert. Can be used on up to 40° maximum slope. Attach with small amount of suitable adhesive (e.g. Terostat MS 930 or MS 939).

AIA Insert. Slides into post recess and sits on base plate. Top of extrusion is cut at angle to suit stair slope with AKSV mounted on top. Lengths of insert on either side of post will need to vary to allow for the lower edges of the glass panes to align.

APS2 Balustrade Post (Illustrated)

BSRF BASEPLATE (Illustrated)

CROSS SECTION

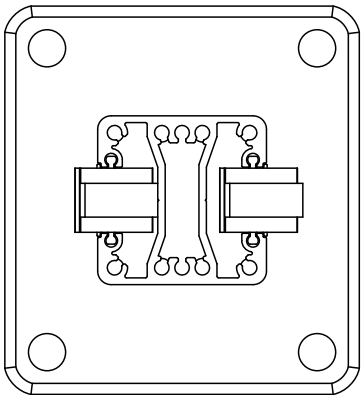

BASEPLATE - TO - POST CONNECTIONS AND POST DRAINAGE

This page describes the method of connecting Flat Base-plate types to posts with internal screwports. The illustrations are of typical components only.

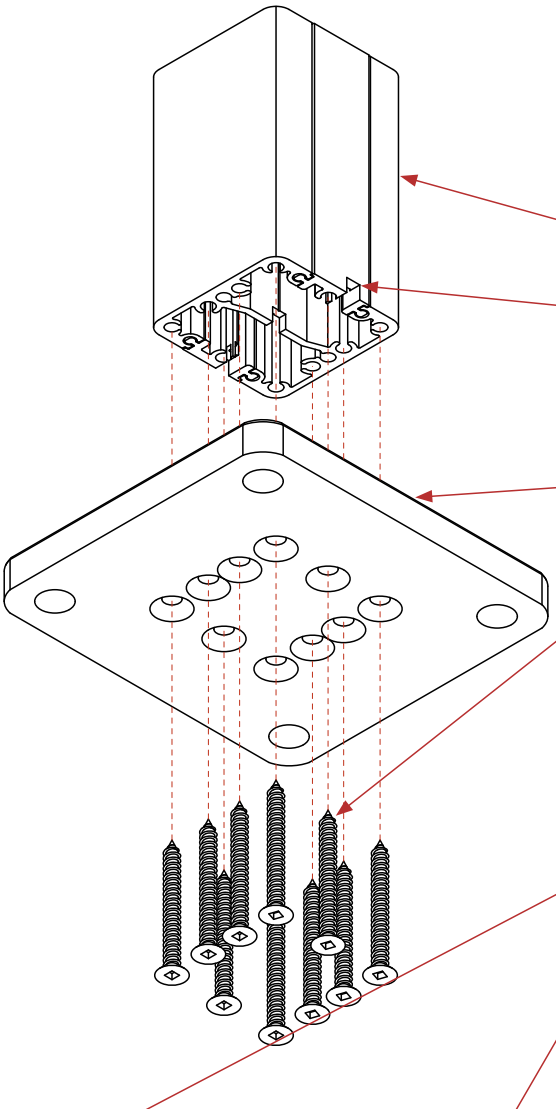

BALUSTRADE POST

DRAINAGE HOLE
Important Note: Mill out two drainage slots at baseplate level. Slots to be a minimum of 5mm wide x 5mm high.

BASEPLATE

FVHT10-50.T1 FASTENERS
Self tapping stainless steel countersunk screws supplied by UNEX. Use of other screws is strictly not permitted and invalidates all Producer Statements and Warranty. Insert screws in all available screwpipes with a power screwdriver, until tight.

DRAINAGE HOLES
For the APE2, API2, APQ2, APS2 and APT Posts mill an extra 5mm wide x 5mm high slots in the internal walls, as illustrated by the dashed lines.

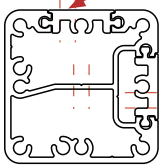

APQ2 POST DRAINAGE

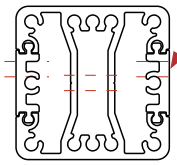

APS2 AND APE2 POST DRAINAGE

Specifications subject to change without notice

SIDE FIXED POST CONNECTIONS AND POST DRAINAGE

This page applies to posts where they are side fixed to timber edge joists in accordance with the Fixing Specifications, which should be referred to for further details. Posts fixed according to these specifications shall be configured as shown in the applicable illustration below. Note that fasteners shown are diagrammatic only, refer to the fixing specification. In all cases, diameters of holes for fasteners through the post should not exceed the fastener diameter by more than 1.0mm.

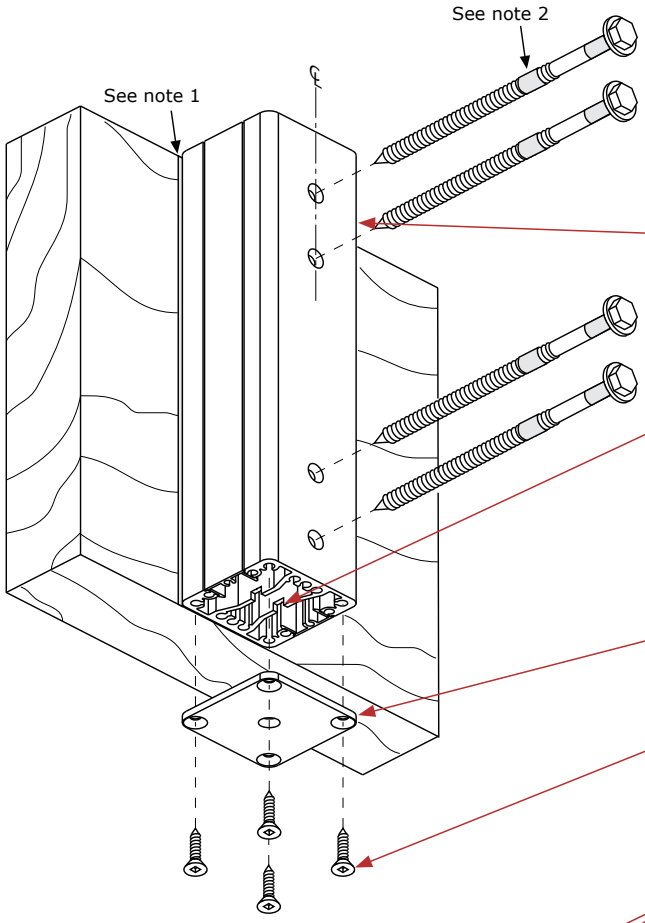

BALUSTRADE POST
APS2 (illustrated) or APE2, API2 & APT Posts

DRAINAGE HOLE
Important Note: Mill out two drainage slots in post webbing at post blank level. Slots to be a minimum of 5mm wide x 5mm high.

POST BLANK

TYPICAL FASTENERS
FVHT10-50.T1 Self tapping stainless steel countersunk screws.

DRAINAGE HOLES
For the APQ2 Post mill an extra 5mm wide x 5mm high slot in the internal cavity, as illustrated.

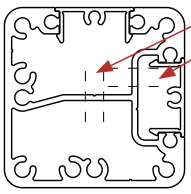

APQ2 POST DRAINAGE

B2 DURABILITY REQUIREMENTS OF NZBC

The following notes outline steps that must be taken to satisfy Clause B2 of the NZ Building Code.

1. In most balustrades situations a separation barrier should be made between the balustrade post and the deck, using Neoprene gasket or other similarly durable material. UNEX Codes; SG24-12 is 24mm wide, SG36-12 is 36mm wide for VPM2 posts, SG42-12 is 42mm wide for 50mm wide posts, and SG50-12 is 60mm wide posts. These products may also assist with water-proofing issues.
2. Fasteners should be wrapped in Teflon tape, UNEX Code TTAM, wherever they may end up in contact with unprotected aluminium surfaces, such as where holes are drilled in the post.

SIDE MOUNTING USING DKG2 GUTTER BRACKETS

This page relates to side-mounting posts using the DKG2 gutter bracket. Minimum joist size required is 190mm.

Attach DKG2 gutter bracket to the fascia prior to the drip edge or soffit beneath being installed. The maximum distance for the finished deck surface to the underside of the baseplate should not be more than 100mm. M8 coach screws should be a minimum of 30mm from the edges of the joist. Ensure any cavity behind the fascia is packed solid at the DKG2 positions. Use SG24 Neoprene gaskets as illustrated, and seal holes and fixings as required.

Once the deck construction and membraning etc is completed, but prior to the gutter installation, install the balustrade using the fasteners illustrated below.

Once the balustrade installation is complete the gutter can be installed. NB - careful selection of the gutter system will minimise the visibility of the DKG2 bracket.

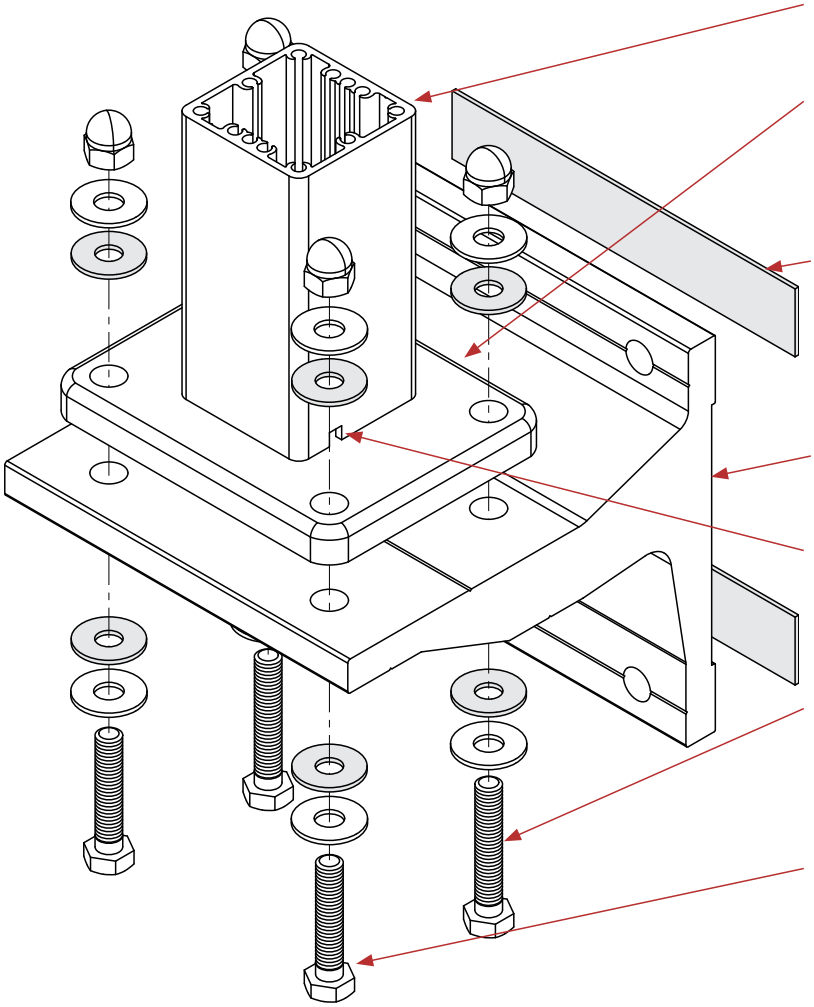

VPH2 (illustrated), VPE or VPM2 post.

BSMF (illustrated) baseplate for VPH2 and VPE post. Use BMMF baseplate for VPM2 post.

SG24 series of Neoprene gaskets to enhance durability requirements for NZBC B2. May also be required to aid with water-proofing issues.

DKG2 Gutter bracket.

Drainage holes. Mill out two drainage slots at baseplate level. Slots to be a minimum of 5mm wide x 5mm high.

FB8-45S Bolt sets. 2 per baseplate. Ensure polymer washers are against aluminium surface.

FB8-40S Bolt sets. 2 per baseplate. Ensure polymer washers are against aluminium surface.

INNER RAILS : CONNECTION TO POSTS

This page applies to UNEX two-piece Top Rails, with an Outer Top Rail ie.- ART, PRR, VRT, VRE or VRR attached to a NON-GLAZED Inner Top Rail eg.- DRH or DRI2. Applicable Post Types: VPM2, VPH2, VPC and VPE. For Glazed Inner Top Rails, refer to Page 194.

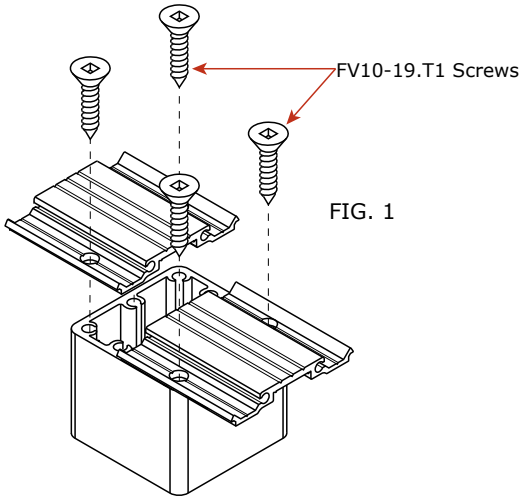

FIG. 1

1. CONNECTION TO IN-LINE POSTS

FV10-19.T1 screws required on the side flanges of the rail, ie:- 2 pair per rail end; or per 4 post where the Inner Rail is continuous; see Fig. 1. Ø5.5mm fixing holes.

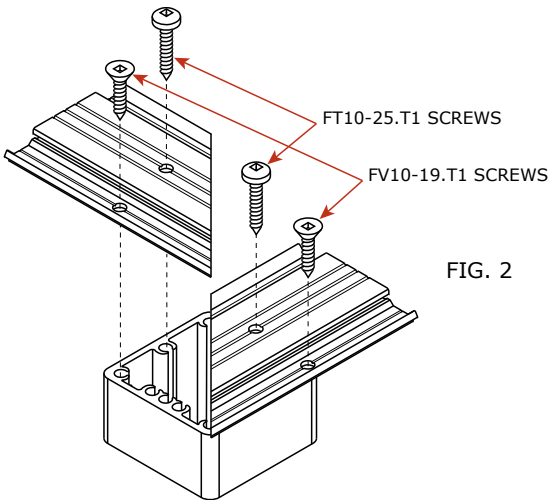

FIG. 2

2. CONNECTION TO CORNER POSTS

The Inner Rail is mitred over the post.

A FT10-25.T1 screw is required on the rail centreline. 1 per rail end. Ø5.5mm fixing holes.

Where rail geometry permits eg.- 90º corners, an additional FV10-19.T1 screw per rail end is required to resist shear

Fig. 2 shows a typical configuration.

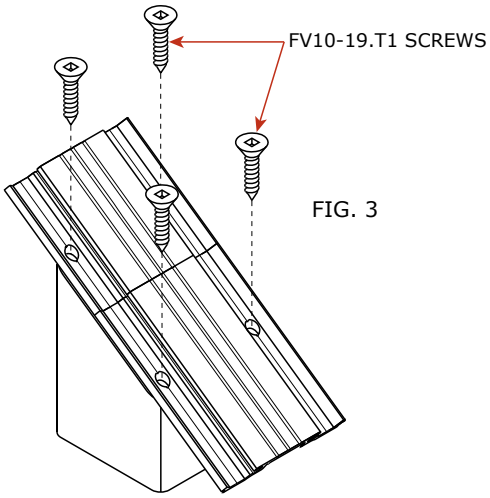

FIG. 3

3. CONNECTION OF SLOPING RAILS

FV10-19.T1 Screws required, 4 per post. Drill Ø5.5mm fixing holes at the correct angle to the rail. Refer to Fig. 3. Grind off protruding side of the screw head to allow the Top Rail to clip on.

(Note: Countersunk screws are used for this application to improve the bearing on the screw head, but the hole does not need to be countersunk).

INNER RAILS : CONNECTION TO POSTS (CONT'D)

This page applies to UNEX Frameless Balustrades with two-piece Top Rails, an Outer Top Rail ie.- ART attached to a NON-GLAZED Inner Top Rail eg.- DRH. Applicable post types are APE2, API2, APS2, APQ2 and APT.

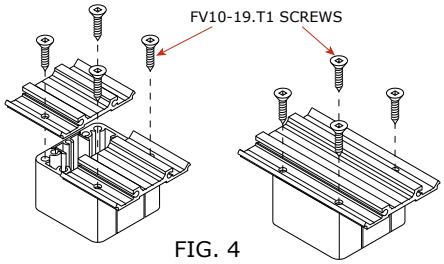

FIG. 4

1. CONNECTION TO IN-LINE POSTS UP TO 35º HORIZONTAL ANGLE

FV10-19.T1 screws required, 4 per post. Ø5.5mm fixing holes to be drilled on the outer groove lines of the Inner Rail. See Fig 4 which illustrates use with both continuous and non continuous Inner Rails.

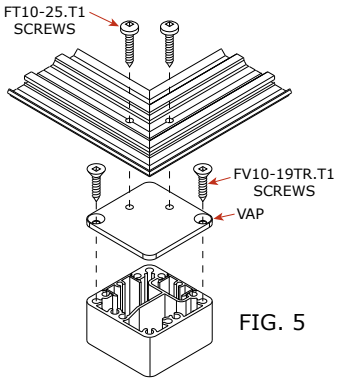

FIG. 5

2. CONNECTION TO APQ2 CORNER POSTS 75º–135º HORIZONTAL ANGLE

The Inner Rail is mitred over the post, to the desired angle. Attach the VAP to top of post using two FV10-19TR.T1 screws. FT10-25.T1 screws required, 1 per rail end. Drill Ø5.5mm fixing holes to be drilled on the Inner Rail centreline. Fig 5 shows a typical arrangement. (Note: Drill Ø4.1mm holes in the VAP to suit the desired angle, refer also to pages 199-202).

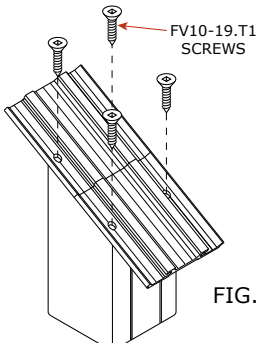

FIG. 6

3. CONNECTION OF SLOPING RAILS TO POST

FV10-25.T1 screws required, 4 per posts on the outer groove lines of the Inner Rail. Drill Ø5.5mm fixing holes at the correct angle to the rail. Fig 6 shows a typical arrangement.

(Note: Countersunk screws are used for this application to improve the bearing on the screw head, but the hole does not need to be countersunk. The screw heads need to be filed flat to allow the Top Rail to clip on).

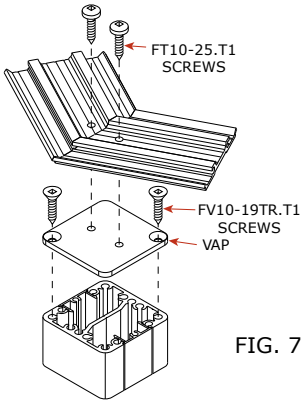

FIG. 7

4. CONNECTION TO POSTS 36º–75º HORIZONTAL ANGLE

The Inner Rail is mitred over the post, to the desired angle. Attach the VAP to top of post using two FV10-19TR.T1 screws. FT10-25.T1 screws required, 1 per rail end. Drill Ø5.5mm fixing holes to be drilled on the Inner Rail centreline. Fig 7 shows a typical arrangement. (Note: Drill Ø4.1mm holes in the VAP to suit the desired angle, refer also to page 198).

GLAZING INNER RAILS : CONNECTION TO POSTS

This page applies to two-piece Top Rails, with an Outer Top Rail ie.- ART, PRR, VRT, VRE or VRR attached to a GLAZED Inner Top Rail ie. DZT3 or PZT Glazing. Applicable Post Types: VPM2, VPH2 and VPE. For NON-GLAZED Inner Top Rails, refer to Page 188.

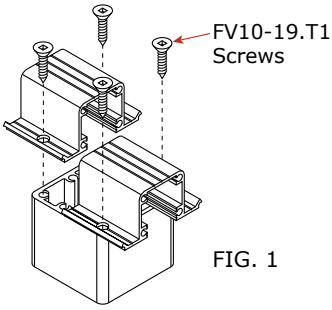

FIG. 1

1. CONNECTION TO IN-LINE POSTS

FV10-19.T1 screws required on the side flanges of the rail, ie:- 2 pair per rail end; or per 4 post where the Inner Rail is continuous; see Fig. 1. Drill Ø5.5mm fixing holes.

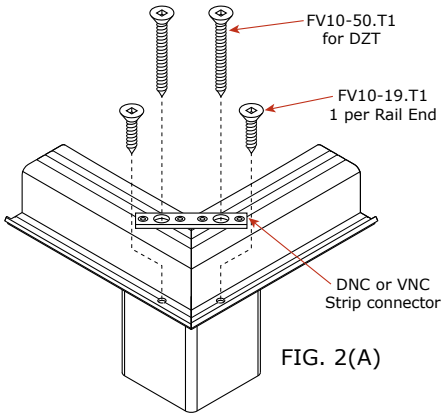

FIG. 2(A)

2. CONNECTION TO CORNER POSTS

The Glazing Rail is mitred over the post.

FV10-50.T1 screws are required for DZT3 Rail, or FT10-38.T1 for PZT Rail. 1 per rail end. Drill Ø5.5mm fixing holes on the rail centreline.

Where rail geometry permits eg.- 90º corners, an additional FV10-19.T1 screw per rail end is required to resist shear (Fig. 2(A)); otherwise a DSZ spacer must be placed on each central screw, as Fig. 2(B).

A strip Connector is recommended where DZT3 rails adjoin on opposite post faces (Fig. 2(C)) and adjacent post faces (Fig. 2(D)). The connector is placed under the central screw heads (FV series to be used) and secured with 4x FS4-4 rivets.

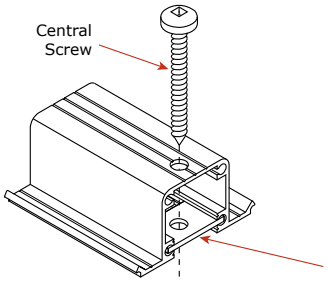

FIG. 2(B)

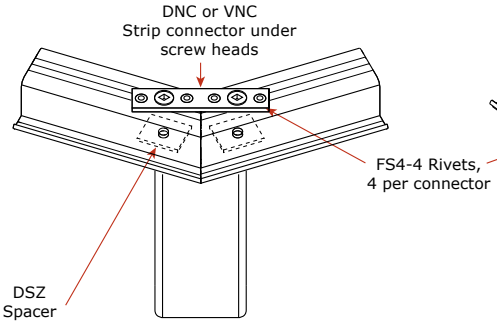

FIG. 2(C)
Rails adjoing opposite post faces

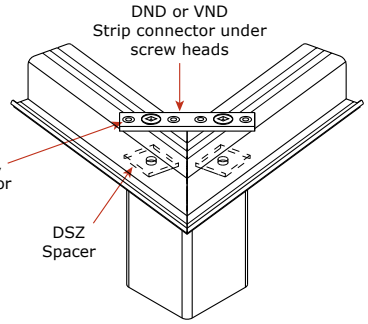

FIG. 2(D)
Rails adjoing adjacent post faces

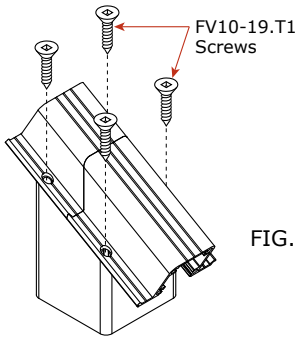

FIG. 3

3. CONNECTION OF SLOPING RAILS

FV10-19.T1 Screws required, 4 per post. Drill Ø5.5mm fixing holes at the correct angle to the rail. Refer to Fig. 3. Grind off protruding side of the screw head to allow the Top Rail to clip on.

(Note: Countersunk screws are used for this application to improve the bearing on the screw head, but the hole does not need to be countersunk).

CORNERS - GENERAL METHODS

This section describes preferred methods of fabricating balustrades at corners. The angle of change in direction is referred to as the Horizontal Angle (HA), and is the preferred form of expressing corner angles. The Horizontal Angle may be calculated as the difference between 180° and the Internal Angle.

There are 4 main methods of fabricating at corners; each with it's own application. They are summarized below (More detailed information given on the following pages).

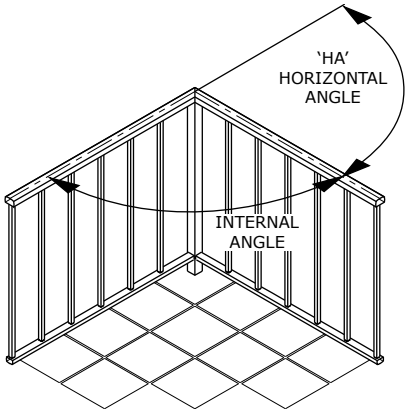

FIG. 1

1. SUPPORTED CORNER JOINT

The Top Rail mitres over the post (Fig. 1). Rails abut adjacent or opposite post faces of square posts, depending on the angle.

APPLICATION
- Standard method for UNEX Balustrades

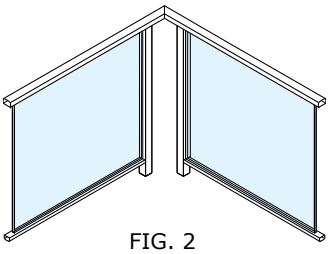

FIG. 2

2. CANTILEVERED CORNER JOINT

The Top Rail is supported by a post on either side of the joint (Fig. 2). Lower Rails terminate at the posts, which are relatively close together. Take care gap between posts does not exceed the permitted maximum.

APPLICATION
- For posts fixed to sides of decks, especially with non-90º corners

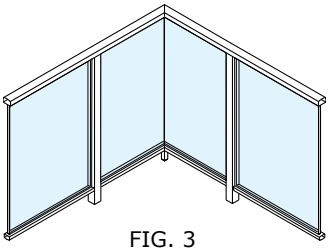

FIG. 3

3. SUSPENDED JOINT

No post in corner, with a half panel (approximately) either side of the joint (Fig. 3). The Lower Rail generally requires an additional support, plus an internal jointer.

Requires a Site Specific design from UNEX.

APPLICATION
- For applications where the DKG fixing Bracket method is used.
- Can be a satisfactory alternative, to suit manufacturing, or aesthetic reasons.

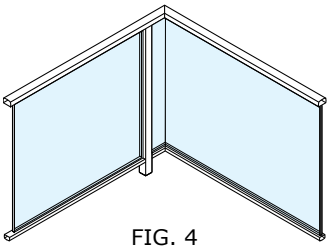

FIG. 4

4. OFFSET CORNER JOINT

Similar to Method 1, except the mitre joint in the Top Rail is to one side of the Post (Fig. 4). The Lower Rail will require to be jointed.

Requires a Site Specific design from UNEX.

APPLICATION
- Used only in special situations.

SUPPORTED CORNER JOINTS, VPM2 POST : HA = 0°-70°

Standard method of Horizontal Corner Joints (HA=0-70°) for UNEX Balustrade styles using VRR and VRT Outer & Inner Top Rail, VRL3 Lower Rail, and 50 x 40 Rectangular Post (VPM2).
Rails abut opposite faces of the post, and the Top Rails mitre on the centreline of the post. The Inner Top Rail is secured on its centreline to the post screwpipe; therefore all rail centrelines project through the screwpipe centre axis. For DZT3 Glazing Rails, refer also to Page 194.

HA= 0-70°, PLAN VIEW OF CORNER JOINT

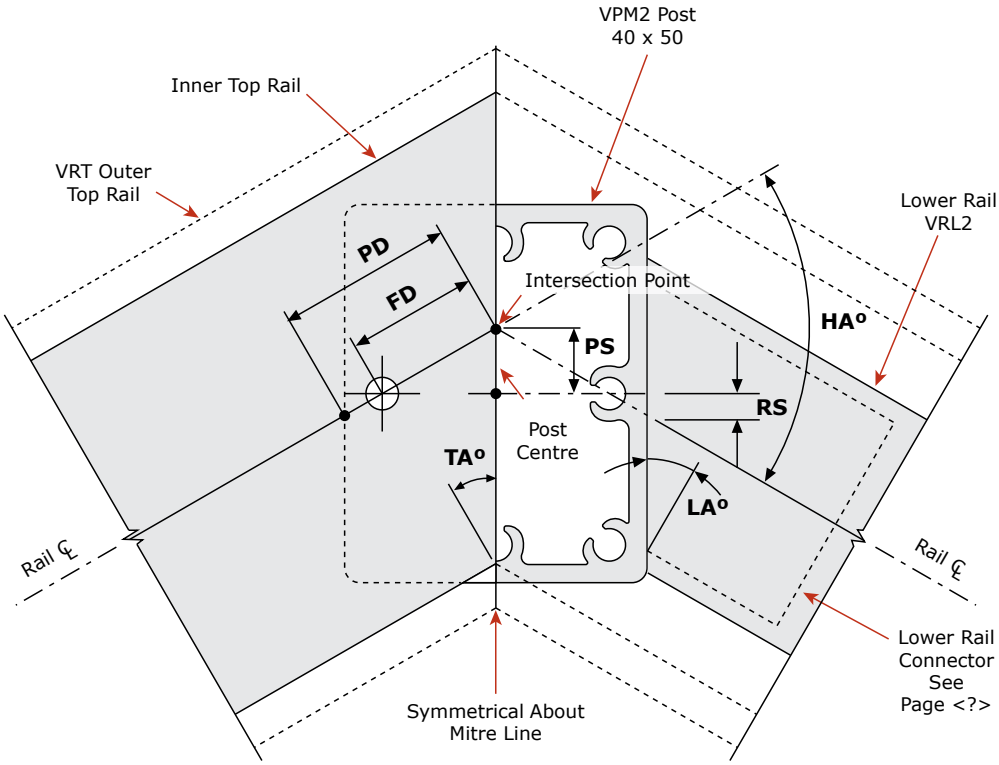

HA= HORIZONTAL ANGLE - THE ANGULAR CHANGE IN DIRECTION OF THE RAIL CENTRELINES AT THE JOINT. SEE PAGE 7.20.1

TA= TOP RAIL CUTTING ANGLE - CUTTING ANGLE FOR TOP RAILS MITRED OVER THE POST.

LA= LOWER RAIL CUTTING ANGLE - CUTTING ANGLE FOR ALL RAIL ENDS CUT BETWEEN THE POSTS.

PD= POST DEDUCTION; DEDUCT PD FROM BOTH ENDS OF INTERSECTION POINT SPACING TO FIND THE CENTRELINE LENGTHS OF RAILS CUT BETWEEN THE POSTS.

FD= FIXING HOLE DISTANCE; FROM THE END OF THE INNER TOP RAIL, ALONG THE CENTRELINE, TO THE CENTRE OF THE FIXING HOLE.

RS= RAIL SHIFT; OFFSET OF LOWER RAIL CENTRELINE FROM THE CENTRE OF THE POST FACE.

PS= POST SHIFT; OFFSET DISTANCE BETWEEN THE POST CENTRE AND THE INTERSECTION POINT OF THE RAILS.

HA°	TA° LA°	PD mm	FD mm	RS mm	PS mm
0	0	20.0	15.0	0	0
5	2.5	20.0	15.0	0.2	0.7
10	5	20.1	15.1	0.4	1.3
15	7.5	20.2	15.1	0.7	2.0
20	10	20.3	15.2	0.9	2.6
25	12.5	20.5	15.4	1.1	3.3
30	15	20.7	15.5	1.3	4
35	17.5	21	15.7	1.6	4.7
40	20	21.3	16	1.8	5.5
45	22.5	21.6	16.2	2.1	6.2
50	25	22.1	16.6	2.3	7.0
55	27.5	22.5	16.9	2.6	7.8
60	30	23.1	17.3	2.9	8.7
65	32.5	23.7	17.8	3.2	9.6
70	35	24.4	18.3	3.5	10.5

SUPPORTED CORNER JOINTS, VPM2 POST : HA = 90°

Standard method of Horizontal Corner Joints (HA=90º) for UNEX Balustrade styles using VRR and VRT Outer + Inner Top Rail, VRL3 Lower Rail, and 50 x 40 Rectangle Post (VPM2).
Rails abut adjacent faces of the post, and the Top Rails mitre on a diagonal over the post. The Inner Top Rail is secured on its centreline to the post screwpipe; therefore all rail centrelines project through the screwpipe centre axis. For DZT3 Glazing Rails, refer also to Page 194.

HA=90º, PLAN VIEW OF CORNER JOINT

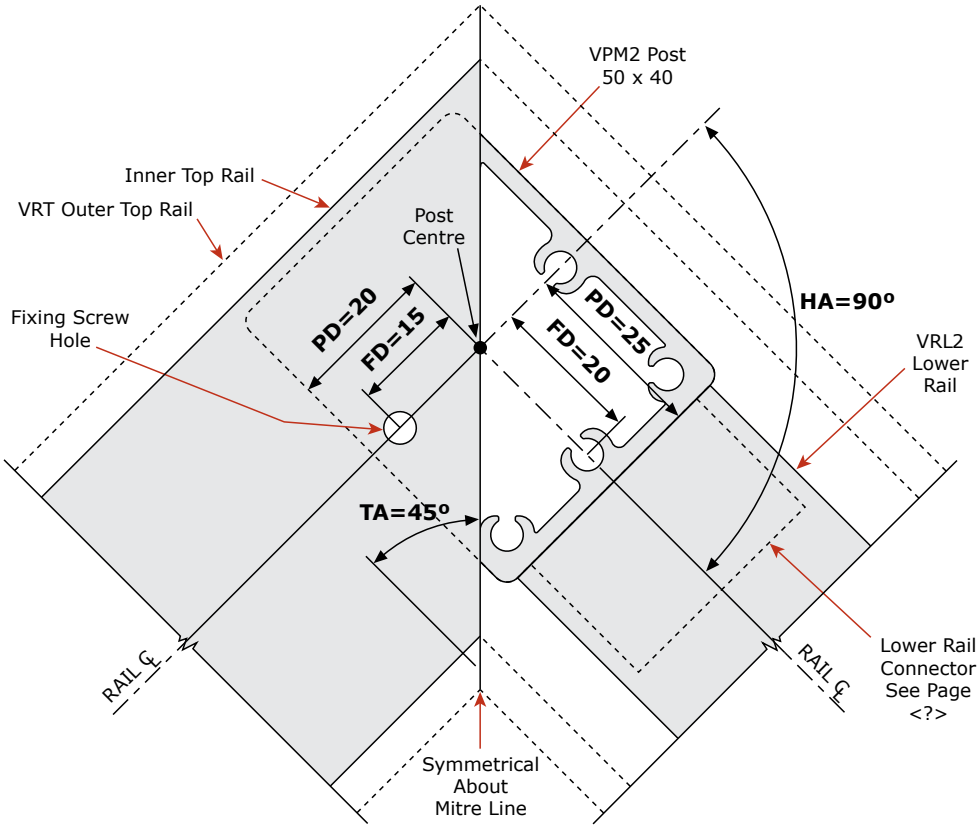

		HA°	TA°	LA°	PD mm	FD mm
HA=	HORIZONTAL ANGLE - THE ANGULAR CHANGE IN DIRECTION OF THE RAIL CENTRELINES AT THE JOINT. SEE PAGE 7.20.1	90	45	0	20.0	15.0
TA=	TOP RAIL CUTTING ANGLE - CUTTING ANGLE FOR TOP RAILS MITRED OVER THE POST.					
LA=	LOWER RAIL CUTTING ANGLE - CUTTING ANGLE FOR ALL RAIL ENDS CUT BETWEEN THE POSTS.					
PD=	POST DEDUCTION; DEDUCT PD FROM BOTH ENDS OF INTERSECTION POINT SPACING TO FIND THE CENTRELINE LENGTHS OF RAILS CUT BETWEEN THE POSTS.				25.0	20.0
FD=	FIXING HOLE DISTANCE; FROM THE END OF THE INNER TOP RAIL, ALONG THE CENTRELINE, TO THE CENTRE OF THE FIXING HOLE.					

SUPPORTED CORNER JOINTS, VPH2 AND VPE POSTS : HA = 0°-75°

Standard method of Horizontal Corner Joints (HA=0-75°) for UNEX Balustrade styles using VRR and VRT Outer + Inner Top Rail, VRL3 Lower Rail, and 50 x 50 Square Posts (VPH2 and VPE).
Rails abut opposite faces of the post, and the Top Rails mitre on the centreline of the post. The Inner Top Rail is secured on its centreline to the post screwpipe; therefore all rail centrelines project through the screwpipe centre axis. For DZT3 Glazing Rails, refer also to Page 194.

HA= 0-75°, PLAN VIEW OF CORNER JOINT

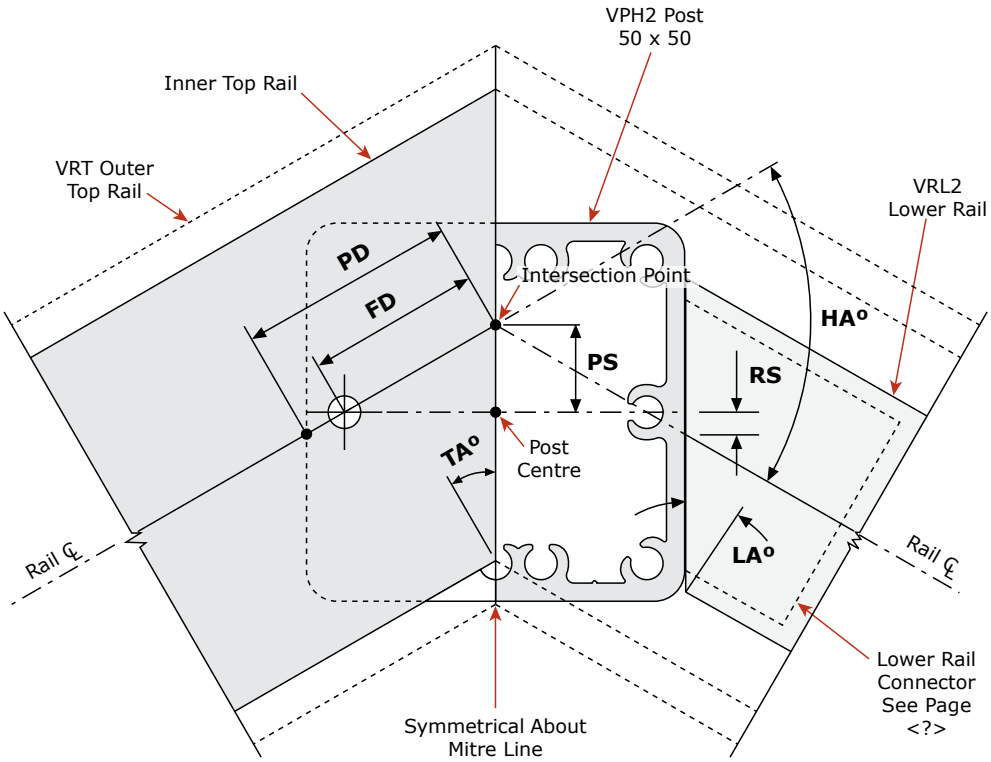

HA= HORIZONTAL ANGLE - THE ANGULAR CHANGE IN DIRECTION OF THE RAIL CENTRELINES AT THE JOINT. SEE PAGE 7.20.1

TA= TOP RAIL CUTTING ANGLE - CUTTING ANGLE FOR TOP RAILS MITRED OVER THE POST.

LA= LOWER RAIL CUTTING ANGLE - CUTTING ANGLE FOR ALL RAIL ENDS CUT BETWEEN THE POSTS.

PD= POST DEDUCTION; DEDUCT PD FROM BOTH ENDS OF INTERSECTION POINT SPACING TO FIND THE CENTRELINE LENGTHS OF RAILS CUT BETWEEN THE POSTS.

FD= FIXING HOLE DISTANCE; FROM THE END OF THE INNER TOP RAIL, ALONG THE CENTRELINE, TO THE CENTRE OF THE FIXING HOLE.

RS= RAIL SHIFT; OFFSET OF LOWER RAIL CENTRELINE FROM THE CENTRE OF THE POST FACE.

PS= POST SHIFT; OFFSET DISTANCE BETWEEN THE POST CENTRE AND THE INTERSECTION POINT OF THE RAILS.

HA°	TA° LA°	PD mm	FD mm	RS mm	PS mm
0	0	25.0	20.0	0	0
5	2.5	25.0	20.0	0.2	0.9
10	5	25.1	20.1	0.4	1.7
15	7.5	25.2	20.2	0.7	2.6
20	10	25.4	20.3	0.9	3.5
25	12.5	25.6	20.5	1.1	4.4
30	15	25.9	20.7	1.3	5.4
35	17.5	26.2	21.0	1.6	6.3
40	20	26.6	21.3	1.8	7.3
45	22.5	27.1	21.6	2.1	8.3
50	25	27.6	22.1	2.3	9.3
55	27.5	28.2	22.5	2.6	10.4
60	30	28.9	23.1	2.9	11.5
65	32.5	29.6	23.7	3.2	12.7
70	35	30.5	24.4	3.5	14.0
75	37.5	31.5	25.2	3.8	15.3

SUPPORTED CORNER JOINTS, VPH2 AND VPE POSTS : HA = 75°-89°

Standard method of Horizontal Corner Joints (HA=75º-89°) for UNEX Balustrade styles using VRR and VRT Outer & Inner Top Rail, VRL3 Lower Rail, and 50 x 50 Square Posts (VPH2 and VPE).
Rails abut adjacent faces of the post, and the Top Rails mitre on a diagonal over the post. The Inner Top Rail is secured on its centreline to the post screwpipe; therefore all rail centrelines project through the screwpipe centre axis. For DZT3 Glazing Rails, refer also to Page 194.

HA=75º-89º, PLAN VIEW OF CORNER JOINT

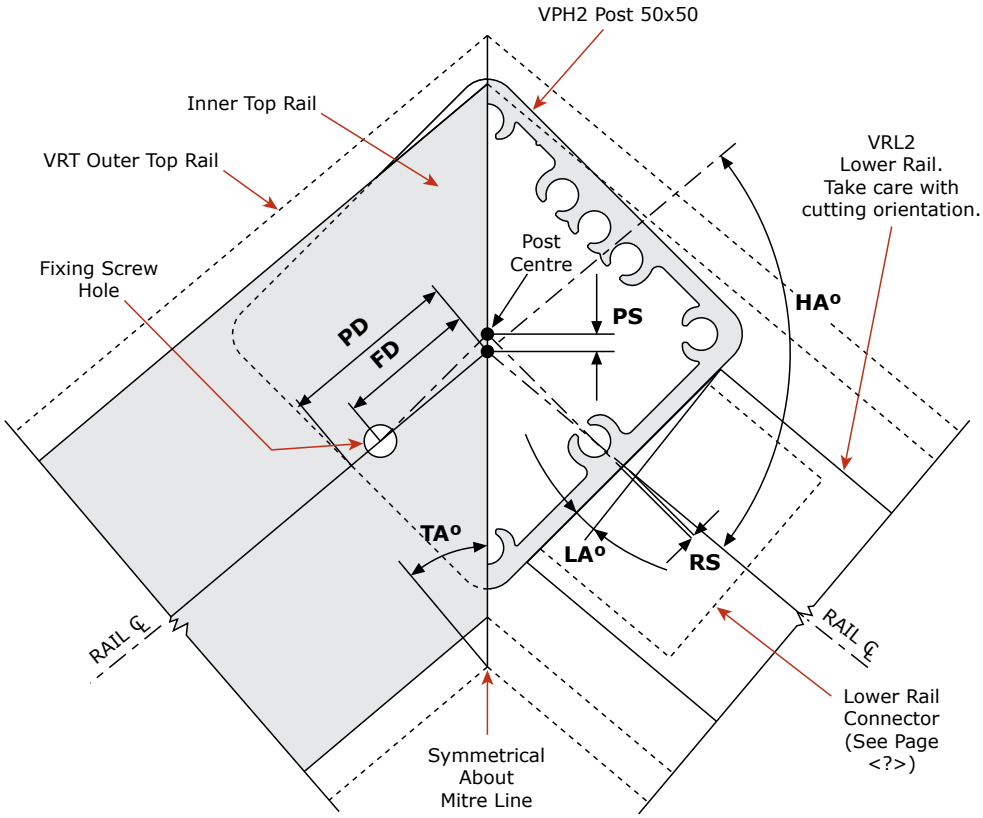

HA= HORIZONTAL ANGLE - THE ANGULAR CHANGE IN DIRECTION OF THE RAIL CENTRELINES AT THE JOINT. SEE PAGE 7.20.1
TA= TOP RAIL CUTTING ANGLE - CUTTING ANGLE FOR TOP RAILS MITRED OVER THE POST.
LA= LOWER RAIL CUTTING ANGLE - CUTTING ANGLE FOR ALL RAIL ENDS CUT BETWEEN THE POSTS.
PD= POST DEDUCTION; DEDUCT PD FROM BOTH ENDS OF INTERSECTION POINT SPACING TO FIND THE CENTRELINE LENGTHS OF RAILS CUT BETWEEN THE POSTS.
FD= FIXING HOLE DISTANCE; FROM THE END OF THE INNER TOP RAIL, ALONG THE CENTRELINE, TO THE CENTRE OF THE FIXING HOLE.
RS= RAIL SHIFT; OFFSET OF LOWER RAIL CENTRELINE FROM THE CENTRE OF THE POST FACE.
PS= POST SHIFT; OFFSET DISTANCE BETWEEN THE POST CENTRE AND THE INTERSECTION POINT OF THE RAILS.

HAº	TAº	LAº	PD mm	FD mm	RS mm	PS mm
75	37.5	7.5	22.8	17.8	0.6	3.3
80	40	5	23.5	18.5	0.4	2.3
85	42.5	2.5	24.2	19.2	0.2	1.2

SUPPORTED CORNER JOINTS, VPH2 AND VPE POSTS : HA = 90°

Standard method of Horizontal Corner Joints (HA=90°) for UNEX Balustrade styles using VRR and VRT Outer & Inner Top Rail, VRL3 Lower Rail, and 50 x 50 Square Posts (VPH2 and VPE).
Rails abut adjacent faces of the post, and the Top Rails mitre on a diagonal over the post. The Inner Top Rail is secured on its centreline to the post screwpipe; therefore all rail centrelines project through the screwpipe centre axis. For DZT3 Glazing Rails, refer also to Page 194.

HA=90º, PLAN VIEW OF CORNER JOINT

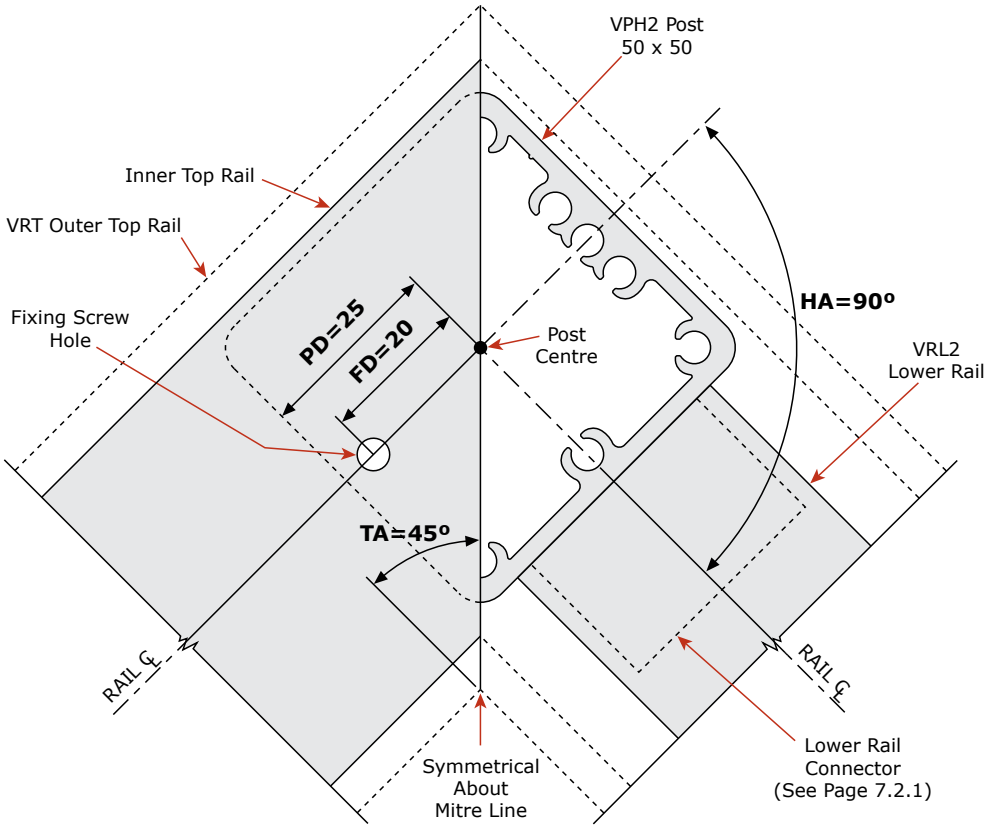

		HA°	TA°	LA°	PD mm	FD mm	RS mm	PS mm
HA=	HORIZONTAL ANGLE - THE ANGULAR CHANGE IN DIRECTION OF THE RAIL CENTRELINES AT THE JOINT. SEE PAGE 7.20.1							
TA=	TOP RAIL CUTTING ANGLE - CUTTING ANGLE FOR TOP RAILS MITRED OVER THE POST.							
LA=	LOWER RAIL CUTTING ANGLE - CUTTING ANGLE FOR ALL RAIL ENDS CUT BETWEEN THE POSTS.							
PD=	POST DEDUCTION; DEDUCT PD FROM BOTH ENDS OF INTERSECTION POINT SPACING TO FIND THE CENTRELINE LENGTHS OF RAILS CUT BETWEEN THE POSTS.							
FD=	FIXING HOLE DISTANCE; FROM THE END OF THE INNER TOP RAIL, ALONG THE CENTRELINE, TO THE CENTRE OF THE FIXING HOLE.	90	45	0	25.0	20.0	0	0
RS=	RAIL SHIFT; OFFSET OF LOWER RAIL CENTRELINE FROM THE CENTRE OF THE POST FACE.							
PS=	POST SHIFT; OFFSET DISTANCE BETWEEN THE POST CENTRE AND THE INTERSECTION POINT OF THE RAILS.							

SUPPORTED CORNER JOINTS, VPH2 AND VPE POSTS : HA = 90°-135°

Standard method of Horizontal Corner Joints (HA=90º-135º) for UNEX Balustrade styles using VRR and VRT Outer & Inner Top Rail, VRL3 Lower Rail, and 50 x 50 Square Posts (VPH2 and VPE).
Rails abut adjacent faces of the post, and the Top Rails mitre on a diagonal over the post. The Inner Top Rail is secured on its centreline to the post screwpipe; therefore all rail centrelines project through the screwpipe centre axis. For DZT3 Glazing Rails, refer also to Page 194. Some of the higher cutting angles for this method may not be easily obtained with some saw types.

HA=90º-135º, PLAN VIEW OF CORNER JOINT

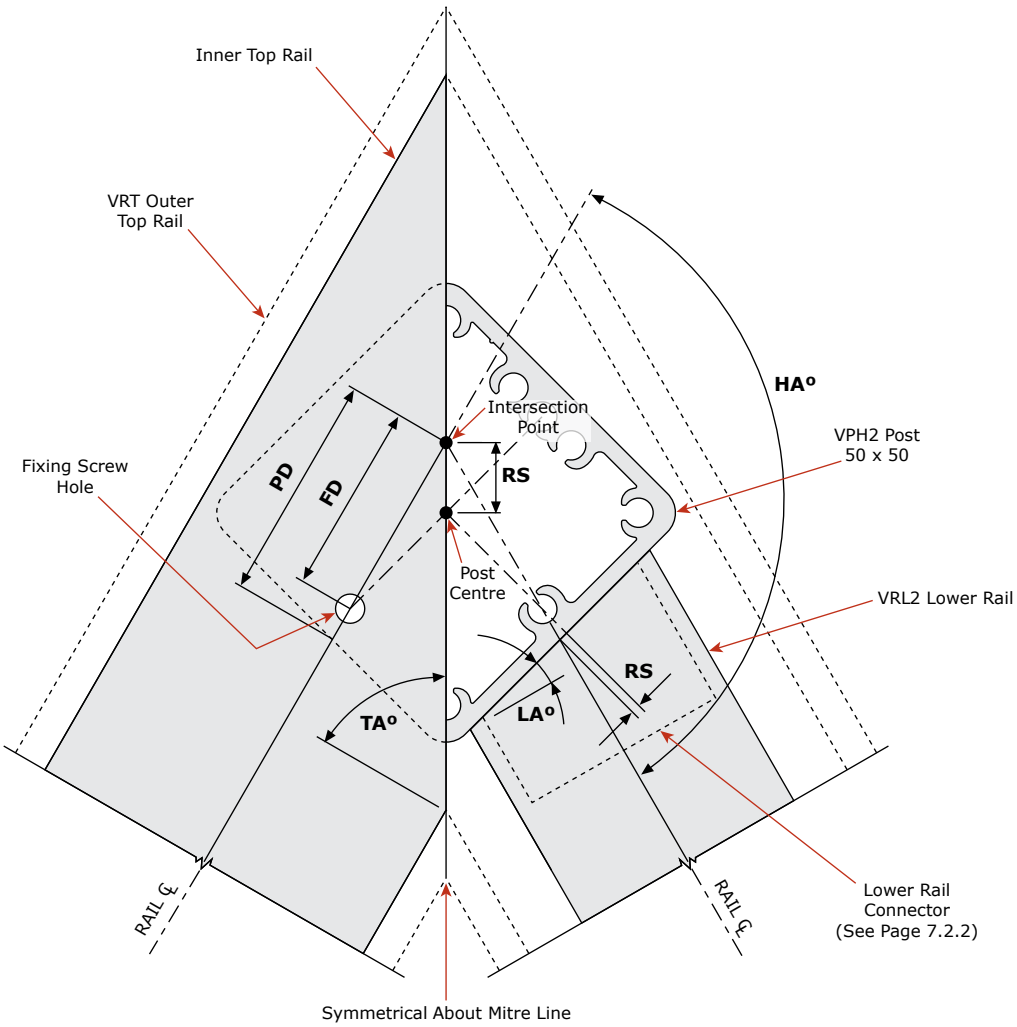

HA= HORIZONTAL ANGLE - THE ANGULAR CHANGE IN DIRECTION OF THE RAIL CENTRELINES AT THE JOINT. SEE PAGE 7.20.1
TA= TOP RAIL CUTTING ANGLE - CUTTING ANGLE FOR TOP RAILS MITRED OVER THE POST.
LA= LOWER RAIL CUTTING ANGLE - CUTTING ANGLE FOR ALL RAIL ENDS CUT BETWEEN THE POSTS.
PD= POST DEDUCTION; DEDUCT PD FROM BOTH ENDS OF INTERSECTION POINT SPACING TO FIND THE CENTRELINE LENGTHS OF RAILS CUT BETWEEN THE POSTS.
FD= FIXING HOLE DISTANCE; FROM THE END OF THE INNER TOP RAIL, ALONG THE CENTRELINE, TO THE CENTRE OF THE FIXING HOLE.
RS= RAIL SHIFT; OFFSET OF LOWER RAIL CENTRELINE FROM THE CENTRE OF THE POST FACE.
PS= POST SHIFT; OFFSET DISTANCE BETWEEN THE POST CENTRE AND THE INTERSECTION POINT OF THE RAILS.

HAº	TAº	LAº	PD mm	FD mm	RS mm	PS mm
90	45	0	25.0	20.0	0	0
95	47.5	2.5	25.9	20.9	0.2	1.3
100	50	5	27.0	22.0	0.4	2.7
105	52.5	7.5	28.2	23.2	0.7	4.3
110	55	10	29.8	24.7	0.9	6.1
115	57.5	12.5	31.4	26.3	1.1	8.1
120	60	15	33.5	28.3	1.3	10.4
125	62.5	17.5	35.8	30.6	1.6	13.0
130	65	20	38.8	33.5	1.8	16.2
135	67.5	22.5	42.4	37.0	2.1	20.0

SUPPORTED CORNER JOINTS AND APS2 POSTS : HA = 0°-35°

Standard method of Horizontal Corner Joints (HA=0º-35º) for UNEX Balustrade styles using ART Outer & DRH Inner Top Rail and 50 x 50 Square Posts (APS2).
Rails abut opposite faces of the post, and the Top Rails mitre on the centreline of the post. The Inner Top Rail is secured via two holes along the outer groove lines, to the corner screwpipes of the post.

HA=0º—35º, PLAN VIEW OF CORNER JOINT

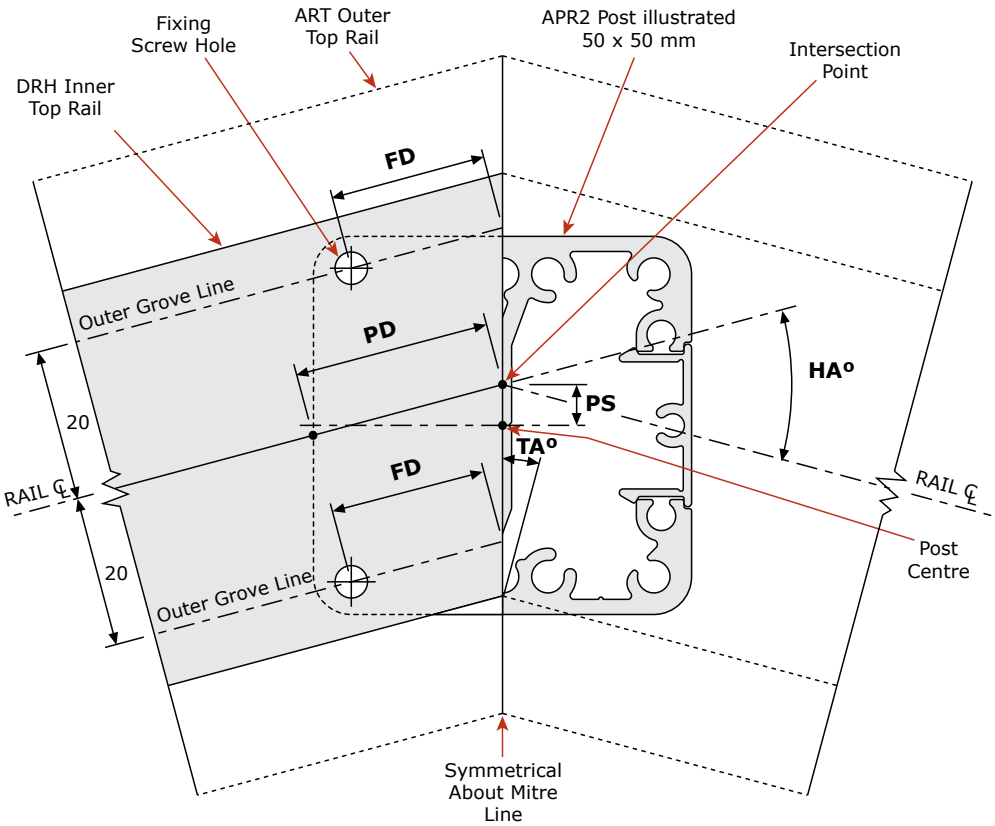

HA= HORIZONTAL ANGLE - THE ANGULAR CHANGE IN DIRECTION OF THE RAIL CENTRELINES AT THE JOINT. SEE PAGE 7.20.1
TA= TOP RAIL CUTTING ANGLE - CUTTING ANGLE FOR TOP RAILS MITRED OVER THE POST.
PD= POST DEDUCTION; DEDUCT PD FROM BOTH ENDS OF INTERSECTION POINT SPACING TO FIND THE CENTRELINE LENGTHS OF RAILS CUT BETWEEN THE POSTS.
FD= FIXING HOLE DISTANCE; FROM THE END OF THE INNER TOP RAIL, ALONG THE CENTRELINE, TO THE CENTRE OF THE FIXING HOLE.
PS= POST SHIFT; OFFSET DISTANCE BETWEEN THE POST CENTRE AND THE INTERSECTION POINT OF THE RAILS.

HAº	TAº	PD mm	FD mm	PS mm
0	0	25.0	20.0	0
5	2.5	25.0	20.0	0.9
10	5	25.1	20.1	1.7
15	7.5	25.2	20.2	2.6
20	10	25.4	20.3	3.5
25	12.5	25.6	20.5	4.4
30	15	25.9	20.7	5.4
35	17.5	26.2	21.0	6.3

SUPPORTED CORNER JOINTS AND APS2 POSTS : HA = 0°-75°

Standard method of Horizontal Corner Joints (HA=0º-75º) for UNEX Balustrade styles using ART Outer + DRH Inner Top Rail and 50 x 50 Square Posts (APS2) with VAP on Top.
Rails abut opposite faces of the post, and the Top Rails mitre on the centreline of the post. The Inner Top Rail is secured on its centreline to the fixing hole in the VAP which is attached to the top of the post.
NOTE: For this corner type the maximum HAº for 10mm glass is 45º.

HA=0º—75º, PLAN VIEW OF CORNER JOINT

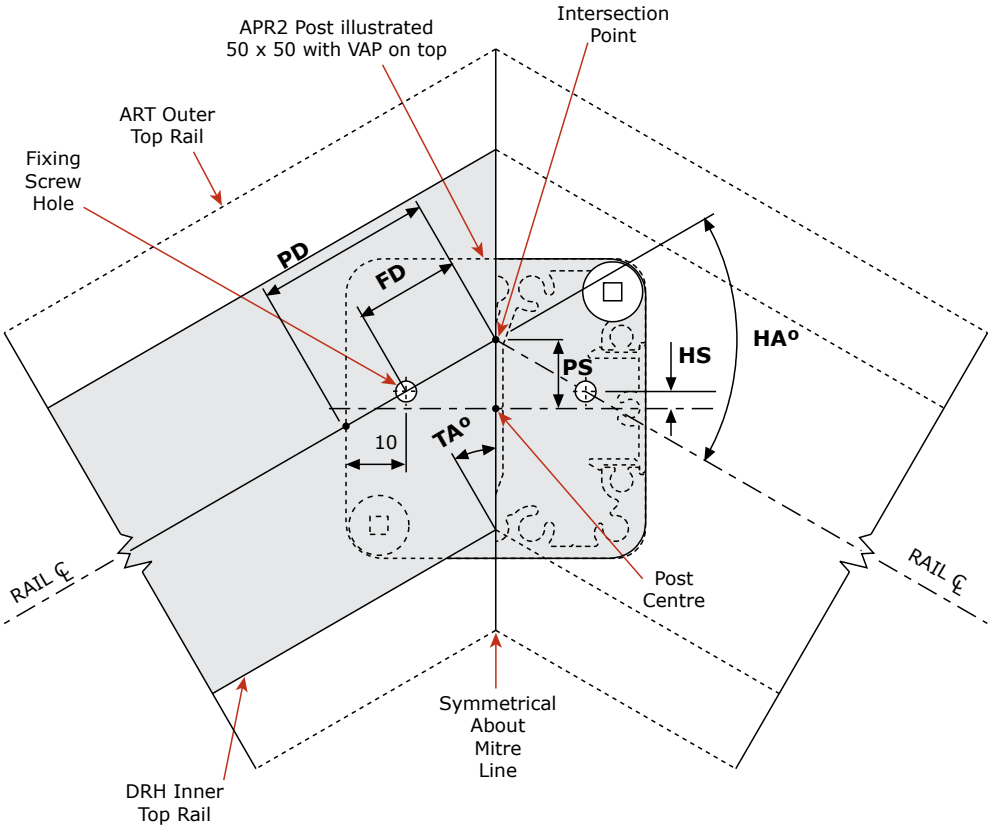

HA= HORIZONTAL ANGLE - THE ANGULAR CHANGE IN DIRECTION OF THE RAIL CENTRELINES AT THE JOINT. SEE PAGE 7.20.1

TA= TOP RAIL CUTTING ANGLE - CUTTING ANGLE FOR TOP RAILS MITRED OVER THE POST.

PD= POST DEDUCTION; DEDUCT PD FROM BOTH ENDS OF INTERSECTION POINT SPACING TO FIND THE CENTRELINE LENGTHS OF RAILS CUT BETWEEN THE POSTS.

FD= FIXING HOLE DISTANCE; FROM THE END OF THE INNER TOP RAIL, ALONG THE CENTRELINE, TO THE CENTRE OF THE FIXING HOLE.

HS= HOLE SHIFT; OFFSET OF FIXING HOLE FROM THE CENTRE OF THE POST FACE.

PS= POST SHIFT; OFFSET DISTANCE BETWEEN THE POST CENTRE AND THE INTERSECTION POINT OF THE RAILS.

HAº	TAº	PD mm	FD mm	HS mm	PS mm	
0	0	25.0	15.0	0	0	Angles suitable for 6mm, 8mm and 10mm glass
5	2.5	25.0	15.0	0.2	0.9	
10	5	25.1	15.1	0.4	1.7	
15	7.5	25.2	15.1	0.7	2.6	
20	10	25.4	15.2	0.9	3.5	
25	12.5	25.6	15.4	1.1	4.4	
30	15	25.9	15.5	1.3	5.4	
35	17.5	26.2	15.7	1.6	6.3	
40	20	26.6	16.0	1.8	7.3	
45	22.5	27.1	16.2	2.1	8.3	
50	25	27.6	16.6	2.3	9.3	Angles suitable for 6mm and 8mm glass only
55	27.5	28.2	16.9	2.6	10.4	
60	30	28.9	17.3	2.9	11.5	
65	32.5	29.6	17.8	3.2	12.7	
70	35	30.5	18.3	3.5	14.0	
75	37.5	31.5	18.9	3.8	15.3	

SUPPORTED CORNER JOINTS, APQ2 POST : HA = 75°-89°

Standard method of Horizontal Corner Joints (HA=75º-89º) for UNEX Balustrade styles using ART Outer & DRH Inner Top Rail and 50 x 50 Square Post (APQ2) with VAP on top.
Rails abut adjacent faces of the post, and the Top Rails mitre on a diagonal over the post. The Inner Top Rail is secured on its centreline to the fixing hole in the VAP which is attached to the top of the post.
NOTE: Any glass entering the shallow recess of the post, at an angle which is not perpendicular to the post face, must be wet glazed with a suitable silicone product.

HA=75º—89º, PLAN VIEW OF CORNER JOINT

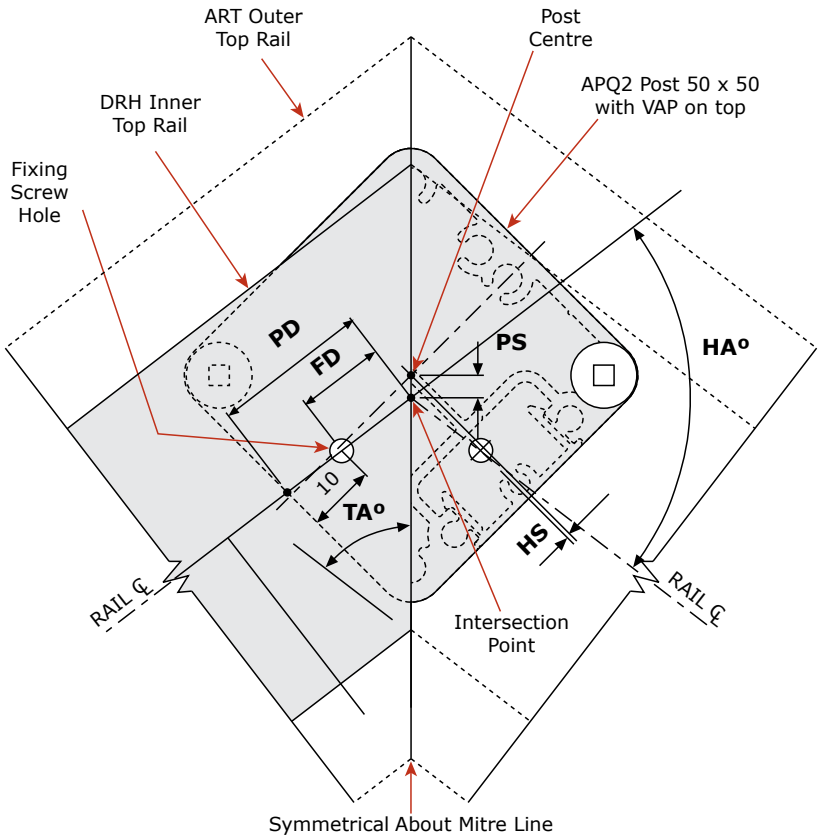

HA= HORIZONTAL ANGLE - THE ANGULAR CHANGE IN DIRECTION OF THE RAIL CENTRELINES AT THE JOINT. SEE PAGE 7.20.1
TA= TOP RAIL CUTTING ANGLE - CUTTING ANGLE FOR TOP RAILS MITRED OVER THE POST.
PD= POST DEDUCTION; DEDUCT PD FROM BOTH ENDS OF INTERSECTION POINT SPACING TO FIND THE CENTRELINE LENGTHS OF RAILS CUT BETWEEN THE POSTS.
FD= FIXING HOLE DISTANCE; FROM THE END OF THE INNER TOP RAIL, ALONG THE CENTRELINE, TO THE CENTRE OF THE FIXING HOLE.
HS= HOLE SHIFT; OFFSET OF FIXING HOLE FROM THE CENTRE OF THE POST FACE.
PS= POST SHIFT; OFFSET DISTANCE BETWEEN THE POST CENTRE AND THE INTERSECTION POINT OF THE RAILS.

HAº	TAº	PD mm	FD mm	HS mm	PS mm
75	37.5	22.8	12.8	0.6	3.3
80	40	23.5	13.4	0.4	2.3
85	42.5	24.2	14.2	0.2	1.2
90	45	25.0	15.0	0	0

SUPPORTED CORNER JOINTS, APQ2 POST : HA = 90°

Standard method of Horizontal Corner Joints (HA=90º) for UNEX Balustrade styles using ART Outer & DRH Inner Top Rail and 50 x 50 Square Post (APQ2) with VAP on top.
Rails abut adjacent faces of the post, and the Top Rails mitre on a diagonal over the post. The Inner Top Rail is secured on its centreline to the fixing hole in the VAP which is attached to the top of the post.
NOTE: Any glass entering the shallow recess of the post, at an angle which is not perpendicular to the post face, must be wet glazed with a suitable silicone product.

HA=90º, PLAN VIEW OF CORNER JOINT

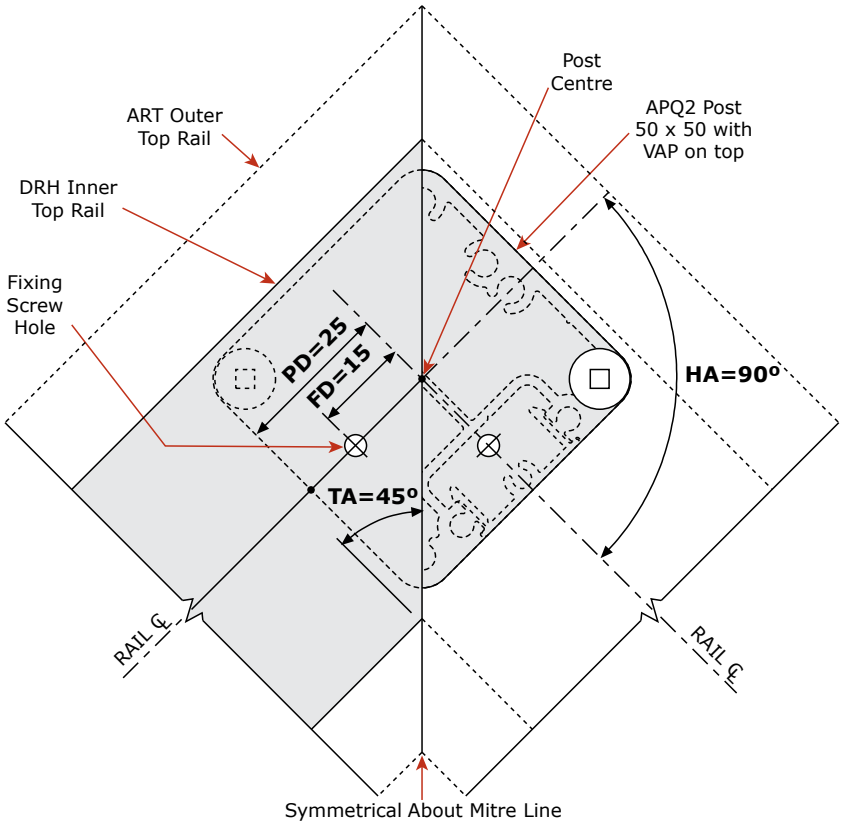

HA= HORIZONTAL ANGLE - THE ANGULAR CHANGE IN DIRECTION OF THE RAIL CENTRELINES AT THE JOINT. SEE PAGE 7.20.1
TA= TOP RAIL CUTTING ANGLE - CUTTING ANGLE FOR TOP RAILS MITRED OVER THE POST.
PD= POST DEDUCTION; DEDUCT PD FROM BOTH ENDS OF INTERSECTION POINT SPACING TO FIND THE CENTRELINE LENGTHS OF RAILS CUT BETWEEN THE POSTS.
FD= FIXING HOLE DISTANCE; FROM THE END OF THE INNER TOP RAIL, ALONG THE CENTRELINE, TO THE CENTRE OF THE FIXING HOLE.
HS= HOLE SHIFT; OFFSET OF FIXING HOLE FROM THE CENTRE OF THE POST FACE.
PS= POST SHIFT; OFFSET DISTANCE BETWEEN THE POST CENTRE AND THE INTERSECTION POINT OF THE RAILS.

HA°	TA°	PD mm	FD mm	HS mm	PS mm
75	37.5	22.8	12.8	0.6	3.3
80	40	23.5	13.4	0.4	2.3
85	42.5	24.2	14.2	0.2	1.2
90	45	25.0	15.0	0	0

SUPPORTED CORNER JOINTS, APQ2 POST : HA = 90°-135°

Standard method of Horizontal Corner Joints (HA=90º-135º) for UNEX Balustrade styles using ART Outer + DRH Inner Top Rail and 50 x 50 Square Posts (APQ2) with VAP on Top.
Rails abut adjacent faces of the post, and the Top Rails mitre on a diagonal over the post. The Inner Top Rail is secured on its centreline to the fixing hole in the VAP, which is attached to the top of the post.
NOTES: Any glass entering the shallow recess of the post, at an angle which is not perpendicular to the post face, must be wet glazed with a suitable silicone product. Some of the higher cutting angles for this method may not be easily obtained with some saw types.

HA= 90º-135º, PLAN VIEW OF CORNER JOINT

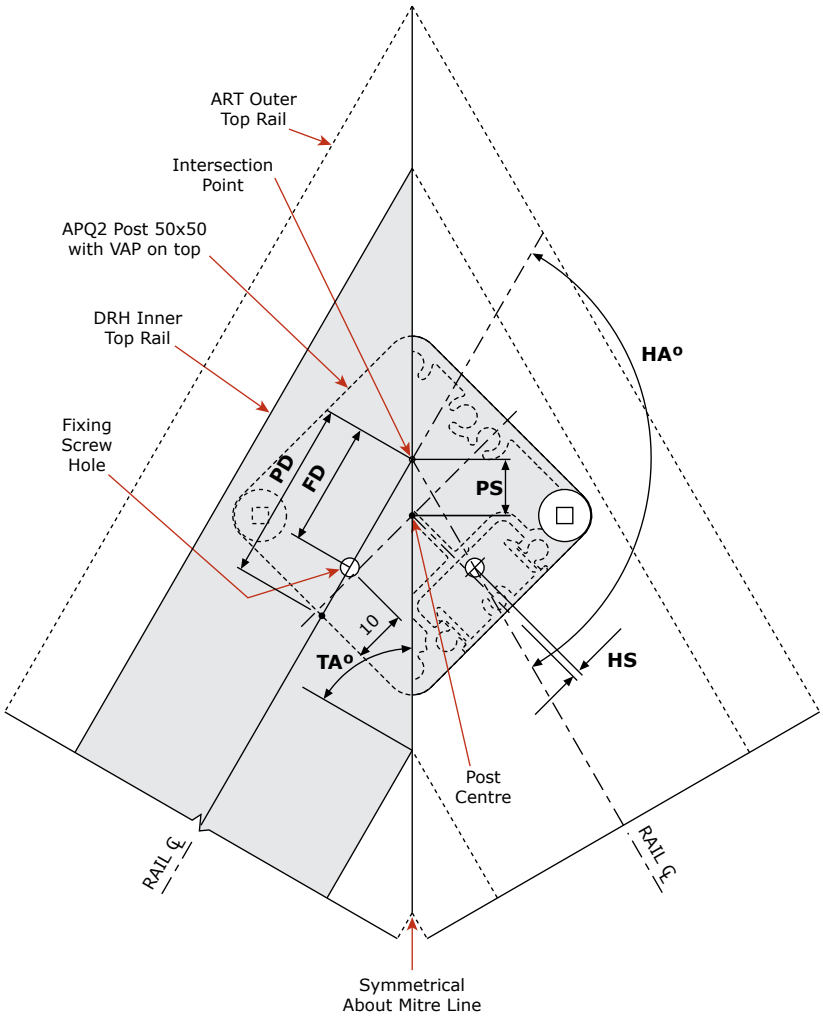

HA= HORIZONTAL ANGLE - THE ANGULAR CHANGE IN DIRECTION OF THE RAIL CENTRELINES AT THE JOINT. SEE PAGE 7.20.1
TA= TOP RAIL CUTTING ANGLE - CUTTING ANGLE FOR TOP RAILS MITRED OVER THE POST.
PD= POST DEDUCTION; DEDUCT PD FROM BOTH ENDS OF INTERSECTION POINT SPACING TO FIND THE CENTRELINE LENGTHS OF RAILS CUT BETWEEN THE POSTS.
FD= FIXING HOLE DISTANCE; FROM THE END OF THE INNER TOP RAIL, ALONG THE CENTRELINE, TO THE CENTRE OF THE FIXING HOLE.
RS= RAIL SHIFT; OFFSET OF LOWER RAIL CENTRELINE FROM THE CENTRE OF THE POST FACE.
PS= POST SHIFT; OFFSET DISTANCE BETWEEN THE POST CENTRE AND THE INTERSECTION POINT OF THE RAILS.

HAº	TAº	PD mm	FD mm	HS mm	PS mm
90	45	25.0	15.0	0	0
95	47.5	25.9	15.9	0.2	1.3
100	50	27.0	17.0	0.4	2.7
105	52.5	28.2	18.2	0.7	4.3
110	55	29.8	19.6	0.9	6.1
115	57.5	31.4	21.2	1.1	8.1
120	60	33.5	23.1	1.3	10.4
125	62.5	35.8	25.4	1.6	13.0
130	65	38.8	28.1	1.8	16.2
135	67.5	42.4	31.5	2.1	20.0

EPOXY-SET ANCHOR STUDS - INSTALLATION SPECIFICATION

1. GENERAL

This is a specification for fixing Stainless Steel studs into structural concrete i.e.- FE8 and FE10 studs. The method used throughout this manual utilizes the Epcon C6 system, and must not be substituted with other epoxies or chemset injection methods without an independent structural assessment of its adequacy to carry the design loads. Note that the Epcon C6 system may be sold under other names in countries other than New Zealand.

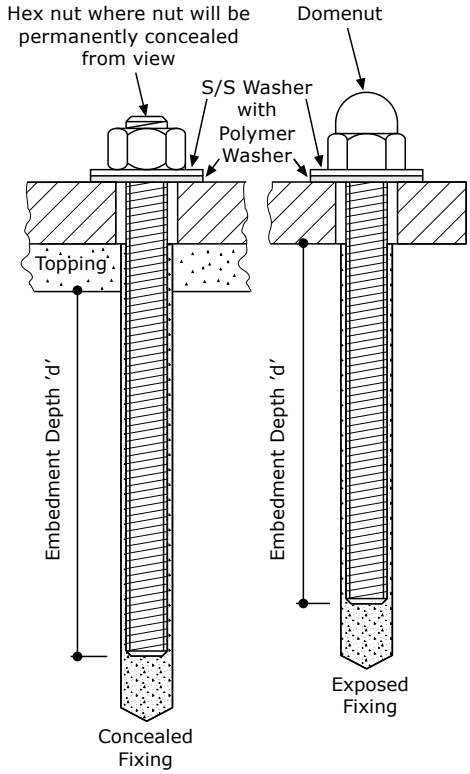

2. MATERIALS

Studs shall be threaded 316 stainless steel studs having a minimum yield stress of 400MPa and a minimum tensile stress of 700 MPa (Grade 70). Typical designations are FE8-105 = an 8mm diameter stainless steel threaded stud of 105mm overall length. Washers, nuts and dome nuts shall be stainless steel and separated from baseplate with a ploymer washer.

3. FIXING MATERIALS

- Cartridges: (TEC2) of Epoxy resin. 1 Cartridge does approx 56 FE8-105 studs or 40 FE10-115 studs.
- Disposable Nozzles: (TEN2) Allow at least 2 nozzles per cartridge.
- Dispensing Handgun: (TEG2)
- Hole Brushes: (TEB)

4. EDGE DISTANCES

Studs must not be installed closer to the edge of the structural concrete, excluding any thickness of plaster or finishing, than shown on the Fixing Specifications in Chapter 3. Where no edge distance is stipulated use the following minimum distances:- FE8 – 35mm, FE10 – 40mm

5. PROCEDURE

5.1. For M8 studs, drill Ø10mm holes. For M10 studs, drill Ø12mm holes. Drill all holes with a carbide tipped drill. Check slab and topping thickness when choosing stud length. Drill holes approx 10mm deeper than stud depth.

5.2. Hole Cleaning: This procedure is very important for successful adhesion and must be carefully carried out.
(a) Blow dust and debris from hole using oil free compressed air with a tube "end fitting" or the TEW hand operated blower. In either case, insert tube to bottom of hole before blowing.
(b) Brush the hole sides thoroughly.
(c) Blow the hole clean a second time.

5.3. Place balustrade in its final position before injecting resin, ensuring posts are vertical. Ensure studs are on-hand with domenuts and washers pre-attached, as resin may set very quickly once dispensed. Studs should initially protrude 4-5mm for M8 studs, or 5-6mm for M10 studs, into domenuts.

5.4. Remove cartridge cap, attach nozzle. (Retain the cap) Dispense resin to waste until it is evenly mixed to correct colour (see colour sample supplied with cartridge). Insert nozzle into hole and dispense resin. Due to possibility of air pockets, the only reliable indicator of sufficient resin in hole is to insert stud and watch for some surplus resin to be forced from the hole. Wipe surplus resin off immediately.

5.5. As each hole is resin injected, insert the stud with a slow twisting motion, before injecting the next hole. Do not pause more than 2 minutes during injection or a new nozzle may be required. Cap cartridge after use. Do not allow loads on balustrade, install glass, or tighten nuts, until fully cured. Refer to curing times on cartridge.

5.6. Do not install studs if temperature is less than 5°C. In all events carefully read and adhere to all instructions contained on the product packet etc.

FABRICATION GUIDE FOR FRAMED GLASS BALUSTRADES STYLES

APPLICATION

This Installation Guide covers the general fabrication of all the framed glass balustrade styles. These consist of: Avon, Camden, and Spectra styles with a top outer rail of either ART, PRR, VRE, VRR, or VRT. Refer to Table 1 for a summary of pages.

TABLE 1 - PAGE GUIDE SUMMARY FOR INSTALLATION GUIDE	
GENERAL FABRICATION GUIDE	INSTALLATION GUIDE (steps 4, 5, 6 & 7 where applicable)
All Styles (steps 1, 2, & 3) Pages 193-196	Avon Pages 197 - 199
	Camden Pages 200 - 202
	Spectra Pages 203 - 206
	Siena Pages 207 - 210

This Guide is intended only to cover details applicable to a common and straightforward deck configuration. For any other situation, or for details not covered below, contact to UNEX.

1. BALUSTRADE DESIGN

This section covers the measuring and design of the balustrade.

1.1 SITE MEASURE
Refer to Pages 151 and 152 for a guide of appropriate measurements that will need to be taken from the site.

1.2 BALUSTRADE SPECIFICATIONS
Ensure adequate instructions have been received from customer to ensure the balustrade is designed to New Zealand Building Code requirements. Such details could include; fixing methods, design wind speeds, building class designations, barrier heights, maximum opening widths, etc.

1.3 POST SPACINGS
By choosing the lesser "Maximum Post Centres" value from the Style Specification (Chapter 3) and the Fixing Specification (Chapter 4), determine the maximum post centres relevant to this project. Any variation in the balustrade height caused by deck falls must be taken into account for this step. Interpolate between values on the specification tables where necessary.

1.4 OVERALL CENTRELINE DIMENSIONS
The Overall Centreline (OCL) is the measurement of all balustrade runs in a continuous line, measured along the balustrade centreline (C) to each mitre, and to the centre of each end post (see Fig. 1 on Page 194)

From the site measurements, determine the OCL of the balustrade, taking into account the balustrade centreline position and any length adjustments necessary due to corners in the deck (see Fig. 1 on Page 194). Also take into account any clearances needed where the balustrade meets a wall face.

1.5 PANEL WIDTH DIMENSIONS
The Panel Width (PW) is a dimension between the faces of adjacent posts, measured along the rail centreline (see Fig. 1 on Page 194).

From the OCL, and the maximum post centres determined in step 1.3, calculate the PW of each panel (see Fig. 1 on Page 194), taking into account the post width and the "PD" Post Deduction taken from Pages 181-191.

(continued on following Page)

FABRICATION GUIDE FOR FRAMED GLASS STYLES - (CONT'D)

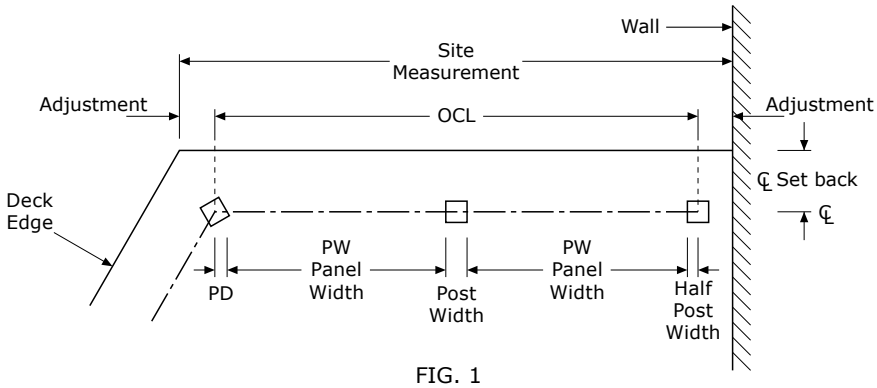

FIG. 1

1.6 VERTICAL DIMENSIONS
Calculate the balustrade heights, post lengths and lower rail positions to ensure the balustrade will meet all New Zealand Building Code requirements, taking into account any deck falls and changes in deck levels.

The relevant vertical dimensions pages in this chapter will provide some useful formulae to calculate this data.

1.7 MATERIAL REQUIREMENTS
Optimise the various member types into available purchasing lengths, taking into account the additional lengths needed for mitre points, saw cuts and saw clamps etc. Any joins in the Outer Top Rail should be ¼ of the way across a panel. Produce a Summary of materials required and order from UNEX.

2. FABRICATION

This section covers the cutting of the members to the required length, and the drilling of most holes required Ensure staff are provided with tools and machinery that are safe, and that they are given full instructions in how to use them.

2.1 CUTTING TO LENGTH
Cut all members to their required length, as calculated in step 1.7. Ensure all mitres are cut at the correct angle and orientation. Remove all burrs with a light file.

2.2 DRILLING OF HOLES
Drill holes in post for Lower Rail connectors, see Fig. 2 on Page 206. Drill Ø4.1mm maximum holes, which must be drilled precisely using a drill guide as shown on Page 154 or similar. Do not use a worn or oversize drill bit. Do not use a hole that is oversize, or from which a screw has been previously withdrawn.

Drill Ø5.5mm holes in the top Inner rail for attaching these rails to the posts. Take care on mitres. Refer again to Pages 192-197.

Drill Ø3.3mm top rail rivet holes in Top Inner Rail at the spacing indicated on the appropriate assembly specification in Chapter 5. Countersunk carefully with Ø5.5mm drill bit from the underside.

For baluster styles, drill Ø4.1mm holes in rails to ensure that balusters have equal gaps, and that no gap exceeds the maximum allowable space. (It is recommended that spaces are kept at least 2mm less than the maximum space allowance.)

De-burr all holes as required.

2.3 PROVISION FOR DRAINAGE
If the balustrade is for exterior use provide drainage holes at the base of all posts. Refer to Pages 182 and 183 for size and position.

Glazed styles only, lower rails are to have a central Ø5.5mm drainage hole in the underside. For sloping panels this should be positioned at the lower end of the lower rail.

(continued on following Page)

FABRICATION GUIDE FOR FRAMED GLASS STYLES - (CONT'D)

3. PRE-ASSEMBLY

This part of the installation process would normally be completed in the factory, prior to site installation.

3.1. BASEPLATE ATTACHMENT
For top mounted posts, attach the baseplates using 10g x 45mm CSK (FV10-45.T1) screws sourced from UNEX. Use of other screws invalidates all warranty and Producer Statements. Refer Pages 182 and 183.

For side mounted posts, attach base blanks using 10g x 19mm CSK (FV10-19.T1) screws.

For side mounted posts (Spectra style ONLY), attach base blanks using 10g x 45mm CSK (FV10-45.T1) screws.

3.2. LOWER RAIL CONNECTOR AND SUPPORT BRACKET (AKS2 & AKSV) ATTACHMENT
For "Avon' and 'Camden' styles, attach connectors using screws as required to ensure full thread engagement in accordance with Page 177 (see Fig. 2).

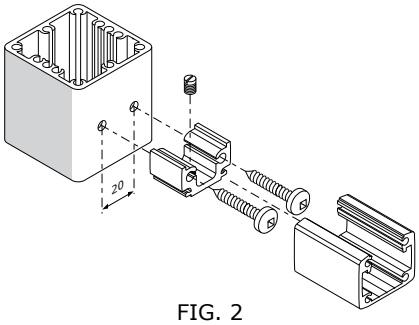

FIG. 2

For "Spectra' styles, push fit AKS2 bracket to top of AIA insert in accordance with Pages 179 and 180 (see Fig. 3).

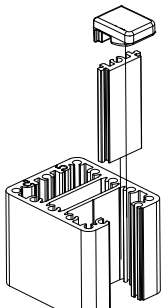

FIG. 3

3.3. LOWER INFILL BLANK (AIA)
Insert the lower AIA insert with the AKS2 support brackets attached on all posts. End posts will require an AIR infill on one side, inserted for the full height of the post glazing recess.

3.3. TOP RAIL ENDCAP ATTACHMENT
For 'Avon' & 'Camden' styles only, attach all endCAPS using a FS4-6 rivet on one side of the top rail only, as illustrated in Fig. 4 to Fig. 6, (using rivets on both sides will prevent the top rail clipping on). Alternatively, endCAPS may be glued on or attached once the site installation is complete.

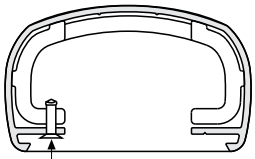

FIG. 4

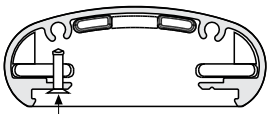

FIG. 5

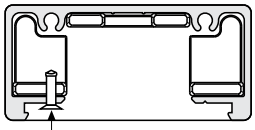

FIG. 6

(continued on following Page)

FABRICATION GUIDE FOR FRAMED GLASS STYLES - (CONT'D)

For 'Spectra' styles only, attach all endCAPS using a FS4-6 rivet on one side of the top rail only, as illustrated in Fig. 7 and Fig. 8 (using rivets on both sides will prevent the top rail clipping on). Alternatively, endCAPS may be glued on or attached once the site installation is complete..

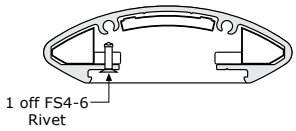

FIG. 7

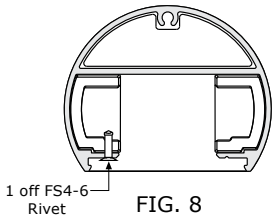

FIG. 8

3.5. RETAINED GLAZING GASKET (GLAZED STYLES ONLY)
Install the correct retained glazing gasket. On a typical installation this would be SRG40 on the outside of the post. Refer the relevant Style Specification in Chapter 5 for the appropriate gasketl.

Further steps continued on the relevant 'Installation Guide' pages; refer to Table 1 on Page 193.

INSTALLATION GUIDE FOR 'AVON' STYLE BALUSTRADES

APPLICATION

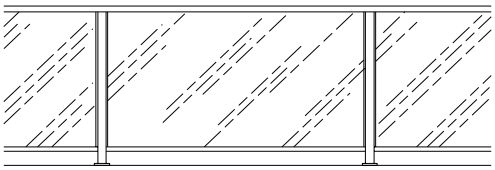

The following sections cover the site installation of the UNEX 'Avon' framed glass balustrade styles with either ART, PRR, VRE, VRR, or VRT Top Outer rail. Refer to the general fabrication guide on Pages 193-196, for all sections prior to section 4 below.

4. SITE ASSEMBLY

This section covers the site assembly of balustrade panels to form a continuous balustrade run, before fixing to the building. Prior to commencing, ensure the Builder has completed all work necessary to support the balustrade and that all nogs and solid blocking for the fixing of posts and wallplates are in place.

4.1. STARTING POST / LOWER RAIL
Starting with an end or corner post, insert two setting blocks the correct way up (see Fi. 1) into the lower rail of the adjacent panel to the post via the connector. Attach the next post to the other end of the lower rail in the same manner.

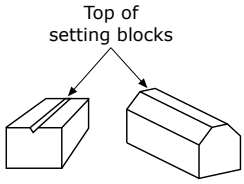

FIG. 1

4.2. INNER TOP RAILS
Attach the Inner Top rail (DRH or DRI2) of the same panel to the posts, using 10g x 19mm CSK (FV10-19.T1) screws on the sides of both, in-line horizontal rails (see Fig. 1) and sloping rails (see Fig. 2). Refer to Page 194. Attach the other end of the Inner Top rail in the same manner to the next post.

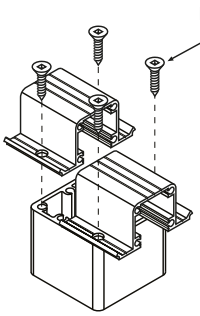

FIG. 2

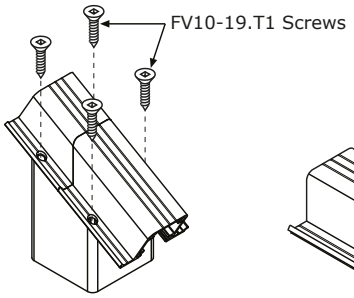

FIG. 3

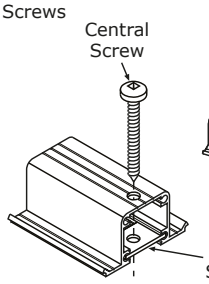

FIG. 4

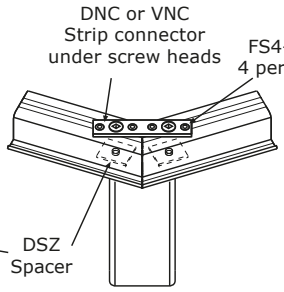

FIG. 5
Rails adjoining opposite post faces

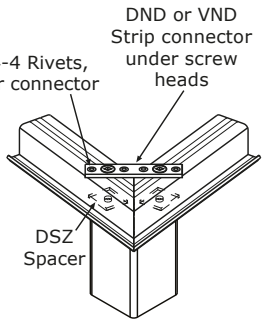

FIG. 6
Rails adjoining adjacent post faces

4.3. RUN ASSEMBLY
Continuing onto the next panel, repeat steps 4.1 and 4.2 above, until a continuous balustrade run has been assembled.

4.4. MITRES
At each corner post the Inner Top Rail ends should form an exact mitre:

(a) For the Avon style with VRT Top Outer Rail (which uses a DZT3 Inner Top Rail), use a DNC Connector for corners where the rails adjoin opposite post faces (See Fig. 5), or DND fro adjacent psot faces (See Fig. 6), using two 10g x 50mm CSK (FV10-50) screws.

(b) For the Avon styles with either VRE or VRR Top Outer Rails (Which use PZT Inner Top Rails), use two 10g x 50 pan head (FT10-50), screws on the rail centreline.

(c) Where two posts are used for a Cantilevered Corner Joint (see Page Page 191, see Fig. 4), the Inner Top Rails are joined by riveting a small aluminium gusset such as a DNS90 to the top of both Inner Top Rails meeting at that corner.

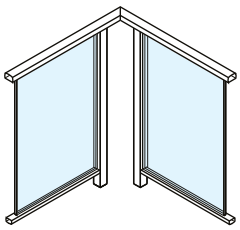

FIG. 7

(continued on following Page)

INSTALLATION GUIDE FOR 'AVON' STYLE BALUSTRADES - (CONT'D)

4.5. NO LOWER RAIL Gaps
Ensure there are no gaps between the Lower Rail ends and the posts. A light duty load-binder can be useful, if used with care, to reduce any such gaps and temporarily 'hold' the whole run together. Tighten the grub screws in the lower rail connectors ANGG just sufficieintly to secure the rail during handling. Do not over tighten, or allow the rail to become indented.

4.6. OUTER TOP RAILS
Clip on the Outer Top Rails, but do not fasten them at this stage. Some situations may require adjusting the effective overall length of the Inner Top Rails to match the Outer Top Rail. This can be achieved by removing the Inner Top rail, cutting it over a post, then elongating the holes in the appropriate direction, and re-installing the screws. The Outer Top Rail rivets installed in step 6.1 will later hold this joint from further movement.

4.7. WALLPLATES
Attach wallplates to rails if applicable. Use 8g x 19mm CSK (FV8-19) screws in all available screw ports. Attach the Lower Wallplate with the wall fixing holes up.

5. ATTACHMENT TO BUILDING

This section covers attachment of the balustrade to the deck and walls if applicable. It is essential that posts are fastened in accordance with the Fixing Specification selected from Chapter 3, for which the post spacing has been designed. All fixings must be Stainless Steel 316 Class 70 or greater.

5.1. FINAL POSITIONING
Move the assembled balustrade run into its final position. On concrete decks ensure outer fixing is not less than the minimum edge distance (e) shown on the relevant fixing specification. On timber decks the fixings are directly over the centre of the support joists or nogs.

5.2. FASTEN POSTS
Secure all posts to the substrate. Refer to the relevant Fixing Specification pages in Chapter 4 for more details on the selected fixing method. A string line should be used to ensure the posts are aligned. The fixings should finally be firm, but not over-tightened. Seal fastener holes as necessary. Ensure polymer washers are inserted between all stainless steel washers used for the substrate fasteners and the aluminium baseplate (top-mounted type) or outside face of the posts (side-mounted type).

Where balustrades are side fixed to the face of the deck, take into account the effect of any fall in the deck to ensure the top rail will be horizontal and the required minimum height will be achieved at all positions. A strip of neoprene gasket (SG42-12) should be placed between the side of the post and the adjacent substrate to provide a separation.

Check posts for verticality, rails for level, and panels for square. Pack posts or baseplates (whichever is applicable) to achieve this.

5.3. FASTEN WALLPLATES
Attach any wallplates to walls, carefully keeping rails parallel, level and at the correct height. Wallplate fixing screws type should be as follows:

Fixing to steel:	Drill and tap steel for either a M5 or M6 machine screws. Protect steel from corrosion.
Fixing to concrete:	Drill Ø6mm hole in concrete 40mm deep and insert a FY6-30 nylon plugs. Then attach with 10g x 38mm (FV10-38.T1) screws to provide a minimum of 30mm penetration.
Fixing to timber:	At framing stage ensure that solid timber blocking is provided over the full area of all rail wallplates. A 150 x 50 nog between relevant studs is suitable. Where the framing is lined with polystyrene or similar, the blocking must extend out to the outside of this material.Fix wallplate through all holes with countersunk 10g x 50mm (FV10-50) long stainless steel wood screws or self tappers.

5.4. INSTALL LOWER RAIL SUPPORTS
Where applicable place the Lower Rail support (DKS3) in the centre of the panel and trim to the correct height. Then secure to deck.

(continued on following Page)

INSTALLATION GUIDE FOR 'AVON' STYLE BALUSTRADES - (CONT'D)

5.5. COMPLETE MITRES
If necessary remove the top rails and again ensure the Inner Top Rails mitre neatly at corners. Rivet any DNC or DND connectors (referred to in section 4.4 above) in final position using four FS4-4 rivets. Refer to Page 194 (see Fig. 5 & 6).

6. FINISHING

This section covers the finishing touches of the aluminium frame ready for glazing;

6.1. ATTACH TOP RAILS
Attach the top rails, using a Ø3.3 mm (1/8") drill bit, drill up through pre-drilled holes on the underside of the Inner Top Rail. Install CSK rivets (FS4-4) to secure the Outer Top Rail. Refer to the relevant Assembly Specification page in Chapter 5. Place additional rivets on both sides of joints in the Outer Top Rail.

6.2. MITRES
Mitred corners may be lightly filed to remove sharp edges. Small joint imperfections may be silicon-filled if necessary and colour matched with touch-up dabsticks to obtain a neat appearance.

6.3. CLEANING
Clean the balustrade frame with a soft sponge and a mild household detergent mixed in warm fresh water. Remove any debris from the deck, paying particular attention to any iron filings, swarf or rivet shanks that may cause rust spots.

7. GLAZING

This section covers the measuring and installation of the glass panes. Ensure the correct thickness of toughened glass is used. Refer Page 57.

7.1. MEASURE GLASS
It is generally advisable for aluminium framework to be completely installed prior to ordering glass. Exposed vertical edges should be smooth arrissed or Flat Polished. Suggested glass sizing for square panels is as follows:

(a)	VRT Top rail:	Glass height = Opening height plus 20mm Glass width = Opening width less 25mm.
(b)	ART, PRR, VRE or VRR Top rail:	Glass height = Opening height plus 14mm. Glass width = Opening width less 25mm.

(c) For sloping panes, the use of a full sized template made from rigid material is recommended.

7.2. INSTALL GLASS
Before installing the glass, ensure setting blocks are at 30mm in from rail ends. On sloping rails the setting blocks will need to be glued in position. Lift glass up into top glazing rail, swing the bottom across and lower onto the setting blocks. Cut the inside lower glazing wedge, leaving slightly over length. Ensure the fins of glazing gaskets are inserted towards the face of the glass. Compress gaskets lengthwise during insertion. Use a glazier's roller to ensure a neat finish.

7.3. CLEAN GLASS
Remove any glazing stickers and clean the glass with a suitable cleaner.

IMPORTANT NOTES

A. All assembly fasteners must be supplied by UNEX as they are specially treated to enhance their durability to meet the New Zealand Building Code requirements.

B. A balustrade should not be attached to a substrate that is not adequately designed or constructed for the service loads that will be placed upon it by the balustrade. Any issue, problem or defect etc must be remedied prior to balustrade installation.

C. Any waterproofing issues are outside the scope of this guide. Advice should be sought from waterproofing specialists in such circumstances.

D. Ensure the homeowner or purchaser is given a copy of the Care & Maintanence instructions.

INSTALLATION GUIDE FOR 'CAMDEN' STYLES BALUSTRADES

APPLICATION

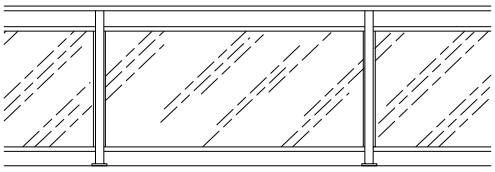

The following sections cover the site installation of the 'Camden' framed glass balustrade style. Refer to the general fabrication guide on Pages 193-196, for all sections prior to section 4 below.

4. SITE ASSEMBLY

This section covers the site assembly of balustrade panels to form a continuous balustrade run, before fixing to the building. Prior to commencing, ensure the Builder has completed all work necessary to support the balustrade and that all nogs and solid blocking for the fixing of posts and wallplates are in place.

4.1. STARTING POST / LOWER AND INTERMEDIATE RAIL
Starting with an end or corner post, attach both the lower and intermediate rails of the adjacent panel to the post via the connector. Attach the next post to the other end of the rails in the same manner.

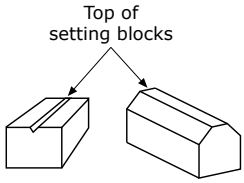

FIG. 1

4.2. INNER TOP RAILS
Attach the Inner Top rail (DRH) of the same panel to the posts, using 10g x 19mm CSK (FV10-19.T1) screws on the sides of both, in-line horizontal rails (see Fig. 1) and sloping rails (see Fig. 2). Refer to Page 188. Attach the other end of the Inner Top rail in the same manner to the next post.

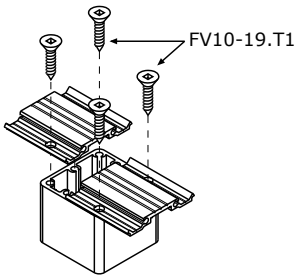

FIG. 2

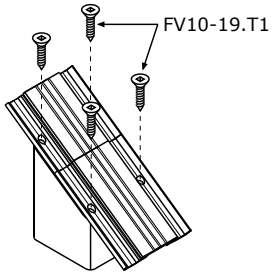

FIG. 3

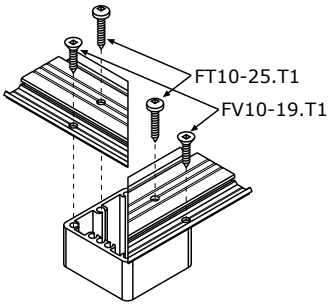

FIG. 4

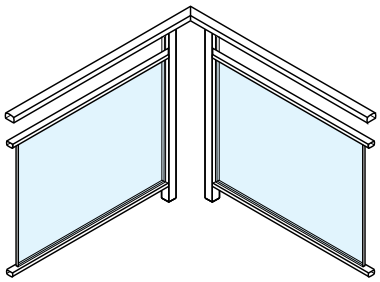

FIG. 5

4.3. RUN ASSEMBLY
Continuing onto the next panel, repeat steps 4.1 and 4.2 above, until a continuous balustrade run has been assembled.

4.4. MITRES
At each corner post the Inner Top Rail ends should form an exact mitre (see Fig. 4). Refer to Page 188. Where two posts are used for a Cantilevered Corner Joint (see Page 191, Fig. 5), the Inner Top Rails are joined by riveting a small aluminium gusset such as a DNS90 to the top of both Inner Top Rails meeting at that corner.

4.5. NO LOWER RAIL GAPS
Ensure there are no gaps between the Lower Rail ends and the posts. A light duty load-binder can be useful, if used with care, to reduce any such gaps and temporarily 'hold' the whole run together. Tighten the grub screws in the lower rail connectors ANGG just sufficiently to secure the rail during handling. Do no tover tighten, or allow the rail surface to become indented.

4.6. OUTER TOP RAILS
Clip on the Outer Top Rails, but do not fasten them at this stage. Some situations may require adjusting the effective overall length of the Inner Top Rails to match the Outer Top Rail. This can be achieved by removing the Inner Top rail, cutting it over a post, then elongating the holes in the appropriate direction, and re-installing the screws. The Outer Top Rail rivets installed in step 6.1 will later hold this joint from further movement.

(continued on following Page)

INSTALLATION GUIDE FOR 'CAMDEN' STYLES BALUSTRADES - (CONT'D)

4.7. WALLPLATES
Attach wallplates to rails if applicable. Use of a VNT connector is essential where the VRT Top Outer Rail is used with wallplates. Use 8g x 19mm CSK (FV8-19) screws in all available screw ports. Attach the mid and lower rail wallplates with the wall fixing holes positioned; below for the mid rail and above for the lower rail wallplate.

5. ATTACHMENT TO BUILDING

This section covers attachment of the balustrade to the deck and walls if applicable. It is essential that posts are fastened in accordance with the Fixing Specification selected from Chapter 3, for which the post spacing has been designed. All fixings must be Stainless Steel 316 Class 70 or greater.

5.1. FINAL POSITIONING
Move the assembled balustrade run into its final position. On concrete decks ensure outer fixing is not less than the minimum edge distance (e) shown on the relevant fixing specification. On timber decks the fixings are directly over the centre of the support joists or nogs.

5.2. FASTEN POSTS
Secure all posts to the substrate. Refer to the relevant Fixing Specification pages in Chapter 4 for more details on the selected fixing method. A string line should be used to ensure the posts are aligned. The fixings should finally be firm, but not over-tightened. Seal fastener holes as necessary. Ensure polymer washers are inserted between all stainless steel washers used for the substrate fasteners and the aluminium baseplate (top-mounted type) or outside face of the posts (side-mounted type).

Where balustrades are side fixed to the face of the deck, take into account the effect of any fall in the deck to ensure the top rail will be horizontal and the required minimum height will be achieved at all positions. A strip of neoprene gasket (SG42-12) should be placed between the side of the post and the adjacent substrate to provide a separation.

Check posts for verticality, rails for level, and panels for square. Pack posts or baseplates (whichever is applicable) to achieve this.

5.3. FASTEN WALLPLATES
Attach any wallplates to walls, carefully keeping rails parallel, level and at the correct height. Wallplate fixing screws type should be as follows:

Fixing to steel:	Drill and tap steel for either a M5 or M6 machine screws. Protect steel from corrosion.
Fixing to concrete:	Drill Ø6mm hole in concrete 40mm deep and insert a FY6-30 nylon plugs. Then attach with 10g x 38mm (FV10-38.T1) screws to provide a minimum of 30mm penetration.
Fixing to timber:	At framing stage ensure that solid timber blocking is provided over the full area of all rail wallplates. A 150 x 50 nog between relevant studs is suitable. Where the framing is lined with polystyrene or similar, the blocking must extend out to the outside of this material.Fix wallplate through all holes with countersunk 10g x 50mm (FV10-50) long stainless steel wood screws or self tappers.

5.4. INSTALL LOWER RAIL SUPPORTS
Where applicable place the Lower Rail support (DKS3) in the centre of the panel and trim to the correct height. Then secure to deck.

5.5. COMPLETE MITRES
If necessary remove the top rails and again ensure the Inner Top Rails mitre neatly at corners.

6. FINISHING

This section covers the finishing touches of the aluminium frame;

6.1. ATTACH TOP RAILS
Attach the top rails, using a Ø3.3mm (1/8") drill bit, drill up through pre-drilled holes on the underside of the Inner Top Rail. Install csk rivets (FS4-4) to secure the Outer Top Rail. Refer to the relevant Assembly Specification page in Chapter 4. Place additional rivets on both sides of joints in the Outer Top Rail.

(continued on following Page)

INSTALLATION GUIDE FOR 'CAMDEN' STYLES BALUSTRADES - (CONT'D)

6.2. MITRES
Mitred corners may be lightly filed to remove sharp edges. Small joint imperfections may be silicon-filled if necessary and colour matched with touch-up dabsticks to obtain a neat appearance.

6.3. CLEANING
Clean the balustrade frame with a soft sponge and a mild household detergent mixed in warm fresh water. Remove any debris from the deck, paying particular attention to any iron filings, swarf or rivet shanks that may cause rust spots.

7. GLAZING

This section covers the measuring and installation of the glass panes. Ensure the correct thickness of toughened glass is used. Refer to Page 57.

7.1. MEASURE GLASS
It is generally advisable for aluminium framework to be completely installed prior to ordering glass. Exposed vertical edges should be smooth arrissed or Flat Polished. Suggested glass sizing for square panels is as follows:

(a) Glass height = Opening height plus 19mm
Glass width = Opening width less 25mm.

(b) For sloping panes, the use of a full sized template made from rigid material is recommended.

7.2. INSTALL GLASS
Before installing the glass, ensure setting blocks are at 30mm in from rail ends. On sloping rails the setting blocks will need to be glued in position. Lift glass up into top glazing rail, swing the bottom across and lower onto the setting blocks. Cut the inside lower glazing wedge, leaving slightly over length. Ensure the fins of glazing gaskets are inserted towards the face of the glass. Compress gaskets lengthwise during insertion. Use a glazier's roller to ensure a neat finish.

7.3. CLEAN GLASS
Remove any glazing stickers and clean the glass with a suitable cleaner.

IMPORTANT NOTES

A. All assembly fasteners must be supplied by UNEX as they are specially treated to enhance their durability to meet the New Zealand Building Code requirements.

B. A balustrade should not be attached to a substrate that is not adequately designed or constructed for the service loads that will be placed upon it by the balustrade. Any issue, problem or defect etc must be remedied prior to balustrade installation.

C. Any waterproofing issues are outside the scope of this guide. Advice should be sought from waterproofing specialists in such circumstances.

D. Ensure the homeowner or purchaser is given a copy of the Care & Maintanence instructions.

(continued on following Page)

INSTALLATION GUIDE FOR 'SPECTRA' STYLES BALUSTRADES

APPLICATION

The following sections cover the site installation of the UNEX 'Spectra' framed glass balustrade styles with either ART, PRR, VRE, VRR, or VRT Top Outer rail. Refer to the general fabrication guide on Page 193-196, for all sections prior to section 4 below.

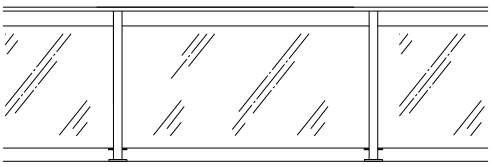

4. SITE ASSEMBLY

This section covers the site assembly of balustrade panels and fixing it to the building. Prior to commencing, ensure the Builder has completed all work necessary to support the balustrade and that all nogs and solid blocking for the fixing of posts and wallplates are in place.

4.1. NON-90º CORNER ONLY
Non-90º corners greater than 5º that are being glazed with SRD gaskets, may require the glass to be inserted prior to fixing the posts. Insert the glass through the recess at 90° to the post face, then pivot the glass around to the desired angle and glaze into adjacent post.

4.2. STARTING POST / TOP INNER RAILS
Ensure the appropriate retained glazing gasket is on the outside of the posts glazing recess (see Assembly Specification AS.40.05T on page 140 through to AS.40.04T on page 145). Starting with an end or corner post, attach the Inner Top rail (DRH) of the adjacent panel to the post, using 10g x 19mm CSK (FV10-19.T1) screws on the sides of both, in-line horizontal rails (see Fig. 1) and sloping rails (see Fig. 2). Refer Page 188. Attach the other end of the Inner Top rail in the same manner to the adjacent post.

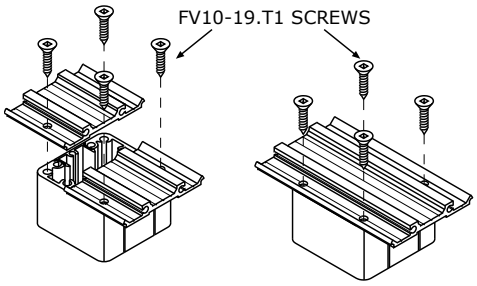

FIG. 1

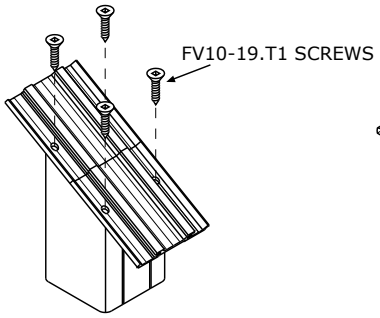

FIG. 2

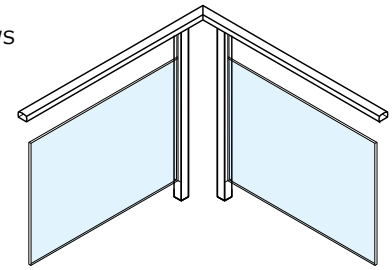

FIG. 3

4.3. RUN ASSEMBLY
Continuing onto the next panel, repeat steps 4.2 above, until a continuous balustrade run has been assembled.

4.4. MITRES
At each corner post the Inner Top Rail ends should form an exact mitre. Refer Page 188. Where two posts are used for a Cantilevered Corner Joint (see Page 191, Fig. 3), the Inner Top Rails are joined by riveting a small aluminium gusset such as a DNS90 to the top of both Inner Top Rails meeting at that corner.

4.5. OUTER TOP RAILS
Clip on the Outer Top Rails, but do not fasten them at this stage. Some situations may require adjusting the effective overall length of the Inner Top Rails to match the Outer Top Rail. This can be achieved by removing the Inner Top rail, cutting it over a post, then elongating the holes in the appropriate direction, and re-installing the screws. The Outer Top Rail rivets installed in step 6.1 will later hold this joint from further movement.

4.6. WALLPLATES
Attach wallplates to rails if applicable. Use 8g x 19mm CSK (FV8-19) screws in all available screw ports.

(continued on following Page)

INSTALLATION GUIDE FOR 'SPECTRA' STYLES BALUSTRADES - (CONT'D)

5. ATTACHMENT TO BUILDING

This section covers attachment of the balustrade to the deck and walls if applicable. It is essential that posts are fastened in accordance with the Fixing Specification selected from Chapter 3, for which the post spacing has been designed.

5.1. POST POSITIONING

On concrete decks ensure outer fixing is not less than the minimum edge distance (e) shown on the relevant fixing specification. On timber decks ensure the fixings are directly over the centre of the support
joists or nogs.

Always ensure that two adjacent APQ2 corner posts have one deep and one shallow glazing cover facing each other, see Fig. 4 (i.e. do not have two shallow glazing covers facing each other, see Fig. 5).

FIG. 4

FIG. 5

5.2. FASTEN POSTS

Secure all posts to the substrate. Refer to the relevant Fixing Specification pages in Chapter 3 for more details on the selected fixing method. A string line should be used to ensure the posts are aligned. The fixings should finally be firm, but not over-tightened. Seal fastener holes as necessary. Ensure polymer washers are inserted between all stainless steel washers used for the substrate fasteners and the aluminium baseplate (top-mounted type) or outside face of the posts (side-mounted type).

Where balustrades are side fixed to the face of the deck, take into account the effect of any fall in the deck to ensure the top rail will be horizontal and the required minimum height will be achieved at all positions. A strip of neoprene gasket (SG42-12) should be placed between the side of the post and the adjacent substrate to provide a separation.

Check posts for verticality, rails for level, and pack posts or baseplates (whichever is applicable) to achieve this.

5.3. FASTEN WALLPLATES

Attach any wallplates to walls, carefully keeping rails parallel, level and at the correct height. Wallplate fixing screws type should be as follows:

Fixing to steel:	Drill and tap steel for either a M5 or M6 machine screws. Protect steel from corrosion.
Fixing to concrete:	Drill Ø6mm hole in concrete 40mm deep and insert a FY6-30 nylon plugs. Then attach with 10g x 38mm (FV10-38.T1) screws to provide a minimum of 30mm penetration.
Fixing to timber:	Stainless Steel screw long enough to enter the structural timber by at least 35mm.

5.4. COMPLETE MITRES

If necessary remove the top rails and again ensure the Inner Top Rails mitre neatly at corners.

6. FINISHING

This section covers the finishing touches of the aluminium frame ready for glazing;

6.1. ATTACH TOP RAILS

Attach the top rails, using a Ø3.3mm (1/8") drill bit, drill up through pre-drilled holes on the underside of the Inner Top Rail. Install rivets (FS4-4) to secure the Outer Top Rail. Refer to the relevant Assembly Specification page in Chapter 4. Place additional rivets on both sides of joints in the Outer Top Rail.

(continued on following Page)

INSTALLATION GUIDE FOR 'SPECTRA' STYLES BALUSTRADES - (CONT'D)

6.2. MITRES
Mitred corners may be lightly filed to remove sharp edges and silicon-filled if desired. Colour matched touch-up dabsticks may be used to improve the appearance.

6.3. CLEANING
Clean the balustrade frame with a soft sponge and a mild household detergent mixed in warm fresh water. Remove any debris from the deck, paying particular attention to any iron filing swarf or rivet shanks that may cause rust spots.

7. GLAZING

This section covers the measuring and installation of the glass panes. Ensure the correct thickness of toughened glass is used. Refer to the Style Specifications in Chapter 2.

7.1. MEASURE GLASS
It is generally advisable for aluminium framework to be completely installed prior to ordering glass. The exception to this is where the glass intersects the post at angles greater that 5°, as outlined in step 4.1. Suggested glass sizing for square panels between end and in-line posts only, or combinations of these are:

Glass height = Refer to the Vertical Dimensions in Chapter 5.
Glass width = Opening Width, plus applicable Glazing Covers as shown on Table 1. Refer also to Fig. 6.

Note: Exposed horizontal edges should be Flat Polished.

For sloping panes, the use of a full sized template made from rigid material is recommended.

TABLE 1 - GLASS WIDTHS FOR VARIOUS POST COMBINATIONS (see Fig. 3)

Post A		Post B		Glass Width
Post Type	Glazing Cover	Post Type	Glazing Cover	
APE2	18	APE2	18	Opening Width + 36mm
APQ2 (Corner Recess)	12	APE2	18	Opening Width + 30mm
APS2	13	APS2	13	Opening Width + 26mm
APQ2 (Main Recess)	22	APS2	13	Opening Width + 35mm
APQ2 (Corner Recess)	12	APS2	13	Opening Width + 25mm
(1) Careful measuring is required.				

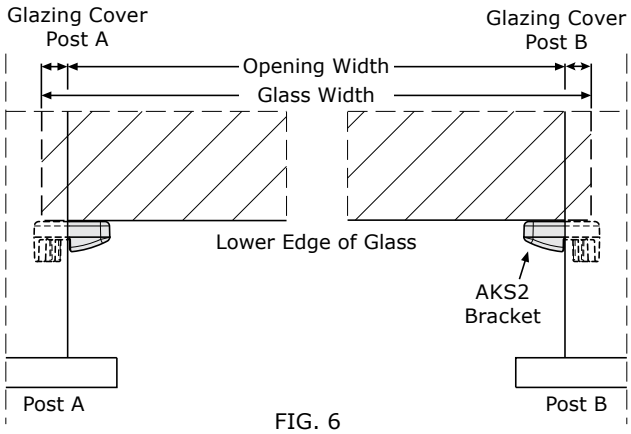

FIG. 6

(continued on following Page)

INSTALLATION GUIDE FOR 'SPECTRA' STYLES BALUSTRADES - (CONT'D)

7.3. INSTALL GLASS
Glass is to be installed by sliding down from above before the top rail is installed. Cut the inside lower glazing wedge, leaving slightly over length. Ensure the fins of glazing gaskets are inserted towards the face of the glass. Compress gaskets lengthwise during insertion. Use a glazier's roller to ensure a neat finish.

7.4. INSTALL GLAZING GASKET
Cut the inside lower glazing wedge, leaving slightly over length. Ensure the fins of glazing gaskets are inserted towards the face of the glass. Compress gaskets lengthwise during insertion. Use a glazier's roller to ensure a neat finish. Refer to the table in chapter one for the appropriate glazing gaskets used for various glass thicknesses.

When using SRG70 retained backing wedge use:
- SWE50 for 8mm glass

When using SRG40 retained backing wedge use:
- SWE55 for 10mm glass
- SWE35 for 12mm glass

For situations that need to be 'wet glazed' into the recessed posts (eg adjacent to gates, non 90° corners, etc), this should be done with a suitable silicone product in accordance with good industry practice.

7.5. TOP INFILL BLANK (AIR)
Insert the AIR infill blank at the top between the top edge of the glass and the underside of the top inner rail on all posts. Refer to the Vertical Dimension 'ILT' on Page 169.

7.6. CLEAN GLASS
Remove any glazing stickers and clean the glass with a suitable cleaner.

IMPORTANT NOTES

A. All assembly fasteners must be supplied by UNEX as they are specially treated to enhance their durability to meet the New Zealand Building Code requirements.

B. A balustrade should not be attached to a substrate that is not adequately designed or constructed for the service loads that will be placed upon it by the balustrade. Any issue, problem or defect etc must be remedied prior to balustrade installation.

C. Any waterproofing issues are outside the scope of this guide. Advice should be sought from waterproofing specialists in such circumstances.

D. Ensure the homeowner or purchaser is given a copy of the Care & Maintanence instructions.

INSTALLATION GUIDE FOR 'SIENA' STYLES BALUSTRADES

APPLICATION

The following sections cover the site installation of the UNEX 'Siena' framed glass balustrade styles with either ART, PRR, VRE, VRR, or VRT Top Outer rail. Refer to the general fabrication guide on Page 193-196, for all sections prior to section 4 below.

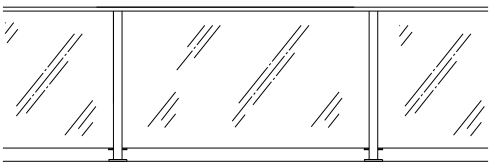

4. SITE ASSEMBLY

This section covers the site assembly of balustrade panels and fixing it to the building. Prior to commencing, ensure the Builder has completed all work necessary to support the balustrade and that all nogs and solid blocking for the fixing of posts and wallplates are in place.

4.1. NON-90º CORNER ONLY
Non-90º corners greater than 5º that are being glazed with SRD gaskets, may require the glass to be inserted prior to fixing the posts. Insert the glass through the recess at 90° to the post face, then pivot the glass around to the desired angle and glaze into adjacent post.

4.2. STARTING POST / TOP INNER RAILS
Ensure the appropriate retained glazing gasket is on the outside of the posts glazing recess (see Assembly Specification AS.41.05T on page 145 through to AS.41.04T on page 149). Starting with an end or corner post, attach the Inner Top rail (PZT or DZT3) of the adjacent panel to the post, using 10g x 19mm CSK (FV10-19.T1) screws on the sides of both, in-line horizontal rails (see Fig. 1) and sloping rails (see Fig. 2). Refer Page 188. Attach the other end of the Inner Top rail in the same manner to the adjacent post.

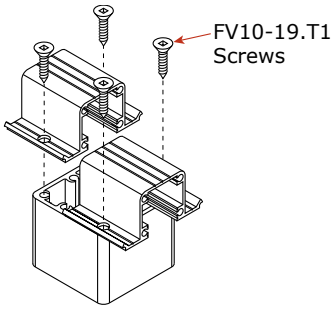

FIG. 1

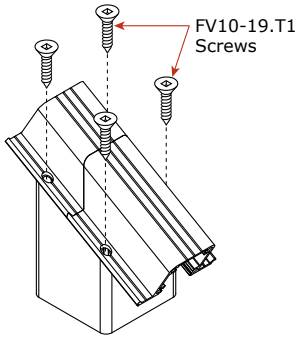

FIG. 2

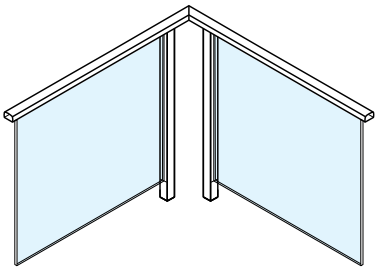

FIG. 3

4.3. RUN ASSEMBLY
Continuing onto the next panel, repeat steps 4.2 above, until a continuous balustrade run has been assembled.

4.4. MITRES
At each corner post the Inner Top Rail ends should form an exact mitre. Refer Page 194. Where two posts are used for a Cantilevered Corner Joint (see Page 191, Fig. 2), the Inner Top Rails are joined by riveting a small aluminium gusset such as a DNS90 to the top of both Inner Top Rails meeting at that corner.

4.5. OUTER TOP RAILS
Clip on the Outer Top Rails, but do not fasten them at this stage. Some situations may require adjusting the effective overall length of the Inner Top Rails to match the Outer Top Rail. This can be achieved by removing the Inner Top rail, cutting it over a post, then elongating the holes in the appropriate direction, and re-installing the screws. The Outer Top Rail rivets installed in step 6.1 will later hold this joint from further movement.

4.6. WALLPLATES
Attach wallplates to rails if applicable. Use 8g x 19mm CSK (FV8-19) screws in all available screw ports.

(continued on following Page)

INSTALLATION GUIDE FOR 'SIENA' STYLES BALUSTRADES - (CONT'D)

5. ATTACHMENT TO BUILDING

This section covers attachment of the balustrade to the deck and walls if applicable. It is essential that posts are fastened in accordance with the Fixing Specification selected from Chapter 3, for which the post spacing has been designed.

5.1. POST POSITIONING

On concrete decks ensure outer fixing is not less than the minimum edge distance (e) shown on the relevant fixing specification. On timber decks ensure the fixings are directly over the centre of the support joists or nogs.

Always ensure that two adjacent APQ2 corner posts have one deep and one shallow glazing cover facing each other, see Fig. 4 (i.e. do not have two shallow glazing covers facing each other, see Fig. 5).

FIG. 4

FIG. 5

5.2. FASTEN POSTS

Secure all posts to the substrate. Refer to the relevant Fixing Specification pages in Chapter 3 for more details on the selected fixing method. A string line should be used to ensure the posts are aligned. The fixings should finally be firm, but not over-tightened. Seal fastener holes as necessary. Ensure polymer washers are inserted between all stainless steel washers used for the substrate fasteners and the aluminium baseplate (top-mounted type) or outside face of the posts (side-mounted type).

Where balustrades are side fixed to the face of the deck, take into account the effect of any fall in the deck to ensure the top rail will be horizontal and the required minimum height will be achieved at all positions. A strip of neoprene gasket (SG42-12 for 50x50 post) should be placed between the side of the post and the adjacent substrate to provide a separation.

Check posts for verticality, rails for level, and pack posts or baseplates (whichever is applicable) to achieve this.

5.3. FASTEN WALLPLATES

Attach any wallplates to walls, carefully keeping rails parallel, level and at the correct height. Wallplate fixing screws type should be as follows:

Fixing to steel:	Drill and tap steel for either a M5 or M6 machine screws. Protect steel from corrosion.
Fixing to concrete:	Drill Ø6mm hole in concrete 40mm deep and insert a FY6-30 nylon plugs. Then attach with 10g x 38mm (FVS10-38.T1) screws to provide a minimum of 30mm penetration.
Fixing to timber:	Stainless Steel screw long enough to enter the structural timber by at least 35mm.

5.4. COMPLETE MITRES

If necessary remove the top rails and again ensure the Inner Top Rails mitre neatly at corners.

(continued on following Page)

INSTALLATION GUIDE FOR 'SIENA' STYLES BALUSTRADES - (CONT'D)

6. GLAZING

This section covers the measuring and installation of the glass panes. Ensure the correct thickness of toughened glass is used. Refer to the Style Specifications in Chapter 2.

6.1. MEASURE GLASS

It is generally advisable for aluminium framework to be completely installed prior to ordering glass. The exception to this is where the glass intersects the post at angles greater that 5°, as outlined in step 4.1. Suggested glass sizing for square panels between end and in-line posts only, or combinations of these are:

Glass height = Refer to the Vertical Dimension in Chapter 5.
Glass width = Opening Width, plus applicable Glazing Covers as shown on Table 1. Refer also to Fig. 6.

Note: Exposed horizontal edges should be Flat Polished.

For sloping panes, the use of a full sized template made from rigid material is recommended.

TABLE 1 - GLASS WIDTHS FOR VARIOUS POST COMBINATIONS (see Fig. 3)

Post A		Post B		Glass Width
Post Type	Glazing Cover	Post Type	Glazing Cover	
APE2	18	APE2	18	Opening Width + 36mm
APQ2 (Corner Recess)	12	APE2	18	Opening Width + 30mm
APS2	13	APS2	13	Opening Width + 26mm
APQ2 (Main Recess)	22	APS2	13	Opening Width + 35mm
APQ2 (Corner Recess)	12	APS2	13	Opening Width + 25mm

(1) Careful measuring is required.

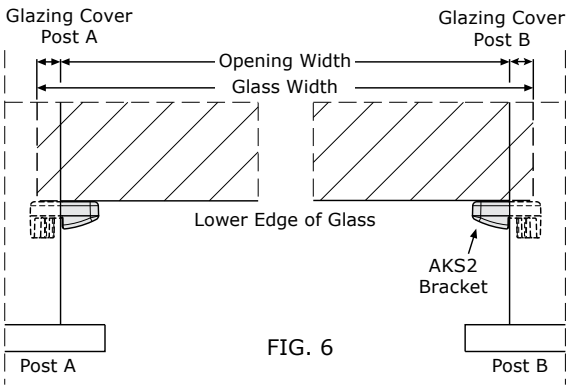

FIG. 6

6.3. INSTALL GLASS

Glass is to be installed by sliding down from above before the top rail is installed. Cut the inside lower glazing wedge, leaving slightly over length. Ensure the fins of glazing gaskets are inserted towards the face of the glass. Compress gaskets lengthwise during insertion. Use a glazier's roller to ensure a neat finish. Refer to the table in chapter one for the appropriate glazing gaskets used for various glass thicknesses.

(continued on following Page)

INSTALLATION GUIDE FOR 'SIENA' STYLES BALUSTRADES - (CONT'D)

6.4. INSTALL GLAZING GASKET
Cut the inside lower glazing wedge, leaving slightly over length. Ensure the fins of glazing gaskets are inserted towards the face of the glass. Compress gaskets lengthwise during insertion. Use a glazier's roller to ensure a neat finish.

When using SRG70 retained backing wedge use:
- SWE70 for 6mm glass (Not Preventing Falls ONLY)
- SWE50 for 8mm glass

When using SRG40 retained backing wedge use:
- SWE55 for 10mm glass
- SWE35 for 12mm glass

For situations that need to be 'wet glazed' into the recessed posts (eg adjacent to gates, non 90° corners, etc), this should be done with a suitable silicone product in accordance with good industry practice.

7. FINISHING

This section covers the finishing touches of the aluminium frame ready for glazing;

7.1. ATTACH TOP RAILS
Attach the top rails, using a Ø3.3mm (1/8") drill bit, drill up through pre-drilled holes on the underside of the Inner Top Rail. Install rivets (FS4-4) to secure the Outer Top Rail. Refer to the relevant Assembly Specification page in Chapter 4. Place additional rivets on both sides of joints in the Outer Top Rail.

7.2. MITRES
Mitred corners may be lightly filed to remove sharp edges and silicon-filled if desired. Colour matched touch-up dabsticks may be used to improve the appearance.

7.3. CLEANING
Clean the balustrade frame with a soft sponge and a mild household detergent mixed in warm fresh water. Remove any debris from the deck, paying particular attention to any iron filing swarf or rivet shanks that may cause rust spots.

Remove any glazing stickers and clean the glass with a suitable cleaner.

IMPORTANT NOTES

A. All assembly fasteners must be supplied by UNEX as they are specially treated to enhance their durability to meet the New Zealand Building Code requirements.

B. A balustrade should not be attached to a substrate that is not adequately designed or constructed for the service loads that will be placed upon it by the balustrade. Any issue, problem or defect etc must be remedied prior to balustrade installation.

C. Any waterproofing issues are outside the scope of this guide. Advice should be sought from waterproofing specialists in such circumstances.

D. Ensure the homeowner or purchaser is given a copy of the Care & Maintenance instructions.

UNEX LOADING CLASSIFICATION

Below is an extract from AS/NZS 1170.1:2002, a standard which is cited in the NZBC. This table gives the minimum imposed actions on barriers for various occupancy types. To the right hand side of this table are the applicable UNEX Loading Classifications (ULC) which are stated in the specifications contained in this catalogue.

AS/NZS 1170.1:2002 TABLE 3.3
MINIMUM IMPOSED ACTIONS FOR BARRIERS

Type of occupancy for part of the building or structure		Specific Uses	Top Edge			Infill		ULC (UNEX Loading Classifications)
			Horizontal kN/m	Vertical kN/m	Inwards, Outwards, or Downwards kN	Horizontal kPa	Any Direction kN	
A	**Domestic and residential activities**	All areas within or serving exclusively one dwelling including stairs, landings, etc., but excluding external balconies and edges of roofs (see C3)	0.35	0.35	0.6	0.5	0.25	**N03R**
		Other residential (see C3)	0.75	0.75	0.6	1.0	0.5	**N07R**
B, E	**Offices and work areas not included elsewhere including storage areas**	Light access stairs and gangways not more than 600mm wide	0.22	0.22	0.6	N/A	N/A	**N02**
		Fixed platforms, walkways, stairways and ladders for access	0.35	0.35	0.6	N/A	N/A	**N03C**
		Areas not susceptible to overcrowding in office and institutional buildings also industrial and storage buildings	0.75	0.75	0.6	1.0	0.5	**N07C**
AREAS WHERE PEOPLE MAY CONGREGATE								
C1/C2	**Areas with tables or fixed seating**	Areas with fixed seating adjacent to a balustrade, restaurants, bars. etc.	1.5	0.75	0.6	1.5	1.5	**N15**
C3	**Areas without obstacles for moving people not susceptible to over-crowding**	Stairs, landings, external balconies, edges of roofs, etc.	0.75	0.75	0.6	1.0	0.5	**N07C**
C5	**Areas susceptible to over-crowding**	Theatres, cinemas, grandstands, disctheques, bars, clubs, auditoria, shopping malls (see also D), assembly areas, studios, etc	3.0*	0.75	0.6	1.5	1.5	**N30** **N20**[1]
D	**Retail areas**	All retails areas including public areas of banks/building societies (see C5 for areas where over-crowding may occur)	1.5	0.75	0.6	1.5	1.5	**N15**

[1] N20 is only applicable where 2.0kN/m horizontal top edge load is acceptable by the Building Consent Authorities.

Reproduced from AS/NZS 1170.1:2002 with the permission of Standards New Zealand under License 000913.

This page is copyright to UNEX Systems (NZ) Ltd with the exception that the copyright for Table 3.3 of AS/NZS 1170.1:2002 is held by Standards New Zealand. Permission for UNEX Systems to use it has been obtained under Copyright License 000913

Building Code Clause(s) B1/F2/F4

PRODUCER STATEMENT – PS1 – DESIGN

ISSUE:01

(Guidance on use of Producer Statements is available at www.engineeringnz.org)

ISSUED BY:	Kirk Roberts Consulting Engineers Ltd. (Design Firm)	PROJECT NO:2130235
TO:	Unex Systems (NZ) Ltd (Owner/Developer)	
TO BE SUPPLIED TO:	To Whom It May Concern (Building Consent Authority)	

IN RESPECT OF: Balustrade styles as supplied by Unex System (NZ) Ltd (see list enclosed). Construction details are to be in accordance with the **UNEX Fabricators' Manuals – Framed Glass v13.1**. The maximum post spacing must not exceed the distance given in the manual referred to above.

(Description of Building Works)

This statement applies to the balustrade styles listed below, as supplied by Unex Systems (NZ) Ltd.

Construction details are to be in accordance with the **UNEX Fabricator's Manuals – Framed Glass v13.1**. The maximum post spacing must not exceed the distance given on the **UNEX Fabricators' Manuals – Framed Glass v13.1**.

Kirk Roberts Consulting Engineers Ltd. holds a current Professional Indemnity Insurance policy for no less than $200,000 and have been engaged by Unex Systems (NZ) Ltd to provide design services for their UNEX balustrading styles in respect of Clauses B1, F2 and F4 of the Building Regulations. The design has been prepared in accordance with Clauses B1/VM1 and B1/AS1. The design of the load carrying members and their connections have been verified by load testing where applicable.

I believe on reasonable grounds that subject to:

1. The balustrade is constructed such that the geometry complies with Acceptable Solutions F4/AS1. This includes the following (but not limited to): The minimum barrier height requirement, the maximum gap allowable and the avoidance of non-complying toeholds.
2. The balustrade is glazed in accordance with **NZS 4223** as cited in Acceptable Solutions **F2/AS1**.
3. All proprietary products meeting their performance specification requirements.
4. The general arrangement and dimensions of the balustrade members, post spacing, fixing details and assembly members being in accordance with the instructions in the current UNEX Fabricators' Manuals – Framed Glass v13.1 and the above details.
5. Limit limitation of this PS1 to 2 years or any other change whichever is the first.

I, Jan Jober Studnicka

- CPEng number 1013092
- And hold the following qualifications: MSc, CPEngNZ, CPEng

SIGNED BY: Jan Jober Studnicka

(Signature)..... Date: 8/02/2024

ON BEHALF OF: Kirk Roberts Consulting Engineers Ltd.
(Design Firm)

Note:

- *This Producer Statement must be accompanied by the relevant Style Specification, Fixing Specification and Assembly Specification pages when submitted for Building Consent purpose.*
- *This statement has been prepared solely for the Building Consent Authority named above and shall not be relied upon by any other person or entity. Any liability in relation to this statemen accrues to the Engineering Design Firm only. As a condition of reliance on this statement, the Building Consent Authority accepts that the total maximum amount of liability of any kind arising from this statement and all other statements provided to the Building Consent Authority in relation to this building work, whether in tort or otherwise, is limited to the sum of $200,000.*

This form is to accompany Form 2 of the Building (Forms) Regulations 2004 for the application of a building Consent.

This is an sample PS1, compliant at the time of printing. Visit www.Unex.co.nz to generate a current generic PS1.

BUILDING CONSENT APPLICATION DOCUMENTS

Following are the 5 recommended pages for submitting a Building Consent Application.

1. Fill out a PS1 Producer Statement page

2. The relevant Style Specification page

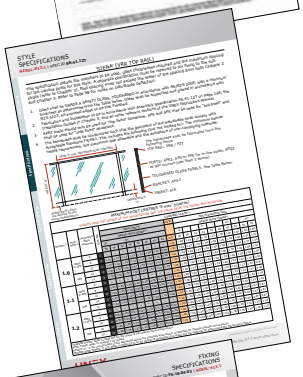

3. The relevant Fixing Specification page

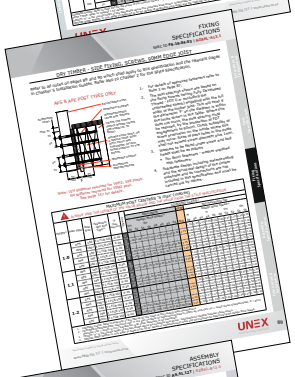

4. The relevant Assembly Specification page

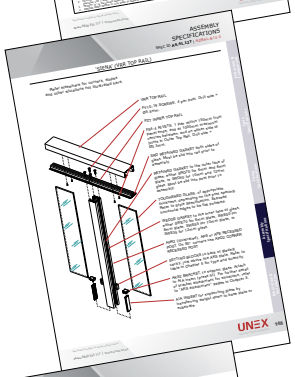
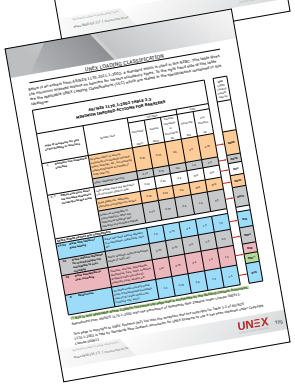
5. The UNEX Loading Classifications page